MITSUBISHI ELECTRIC
HYDRONICS & IT COOLING SYSTEMS S.p.A.

Comfort Applications

PRODUCT GUIDE

- CHILLERS
- HEAT PUMPS
- UNITS FOR SIMULTANEOUS AND INDEPENDENT PRODUCTION OF HOT AND COLD WATER
- ROOFTOP UNITS
- AIR HANDLING UNITS
- HYDRONIC TERMINALS
- CONTROL, SUPERVISION AND OPTIMISATION SYSTEMS
- ANCILLARY PRODUCTS

climaveneta.com

CLIMAVENETA®
SUSTAINABLE COMFORT



Comfort Applications
PRODUCT
GUIDE

CLIMAVENETA®

for Comfort Applications

Climaveneta's mission is to provide energy efficient heating, air conditioning, and optimisation solutions that enhance everyone's comfort, improve the profitability of a building, and do not contribute to an increase in CO_2 levels.

Environmental Respect

Specific solutions for each project

Lowest cost of Ownership

As a European leader in the HVAC industry, Climaveneta has provided premium air conditioning and heating solutions for the most challenging and demanding projects worldwide for over 45 years. Building on this strong legacy, Mitsubishi Electric Hydronics & IT Cooling Systems S.p.A. has decided to turn Climaveneta into the Group's specialized brand for hydronic comfort applications.
The result is the most complete range of advanced solutions providing enhanced usability, energy efficiency, and environmental sustainability to modern buildings, as well as for the health, and well-being of the people who spend their time there.
These solutions are backed by a business approach based on flexibility and capability to adapt the system to the requirements of each project, as well as on vast experience and on the strength of belonging to a large multinational group such as Mitsubishi Electric in terms of integrated R&D, operations and central functions.

Leadership in smart heat pumps for 4 and 6 pipe systems

Extensive Range of Hydronic units
from 1 to 4.549kW

Complete range of rooftop units up to 350kW and AHUs up to 100.000m³/h air flow

Vast portfolio of Control, Monitoring and Optimisation systems

13 specialized manufacturing hubs

Countless succesful projects worldwide

3 standard energy efficiency settings

8 standard noise reduction configurations



Climaveneta has developed a large array of solutions and systems for perfect control of environmental conditions in human occupied spaces, based on a wide portfolio of diverse technologies:

- CHILLERS



- HEAT PUMPS



- UNITS FOR SIMULTANEOUS AND INDEPENDENT PRODUCTION OF HOT AND COLD WATER



- ROOFTOP UNITS



- AIR HANDLING UNITS



- HYDRONIC TERMINALS



- CONTROL, SUPERVISION AND OPTIMISATION SYSTEMS



- ANCILLARY PRODUCTS



Climaveneta solutions for comfort applications are designed to provide even in the most challenging residential, office, hotel and retail projects:

Perfect Comfort and Well-being

Ensuring a perfect control of temperature, humidity as well as of air quality and noise level, ideal comfort conditions are ensured even in the most demanding applications and challenging climate conditions.

Environmental Respect

Decreasing energy consumption, cutting carbon emissions and making the most extensive use of renewable sources are key elements of a high quality HVAC, making a positive contribution to greener buildings and better energy performance ratings.

Specific Solution for each project

A vast range of highly configurable products, combined with solutions dedicated to each project, when even the highest configurability is not enough, is key to delivering best comfort with no limitations on architectural choices, reduced footprint of technical systems and no aesthetical impact.

Lowest cost of ownership

Thanks to cutting-edge solutions designed around technological innovation and sustainability in order to drive down initial investment, running costs and maintenance, and to increase the total life cycle of the product.

Simplified on-site operations

Climaveneta units apply a “plug & play” design approach that integrates many functions traditionally provided by different systems, such as heating and cooling. They are equipped with all options and accessories in order to make on site operations rational, simple and predictable, with countless advantages in project management.

Enhanced value of the real estate development

By reducing operational expenses due to running costs and maintenance, as well as by optimising initial investment and opening the opportunity to benefit for energy reduction and green solutions incentives, Climaveneta solutions are a key asset in making new or existing properties more valuable and profitable.

OPERATIONS

13 Manufacturing hubs and 9 R&D and testing laboratories in Italy and worldwide

LABORATORIES

ML11
Treviso
Italy



HPAC, Terminal Units, small chillers & Heat Pumps
- UNI 14511
- ISO 9614-2

ML12
Belluno
Italy



Large chillers and & Heat Pumps
- UNI 14511
- ISO 9614-2

ML21
Valle Salimbene
Italy



Chillers & Heat Pumps
- Up to 1600 kW
- UNI 14511
- ISO 9614-2

ML22
Valle Salimbene
Italy



Precision air conditioners
- EUROVENT 6/6
- ANSI-ASHRAE 2016

ML91
Shanghai
China



Terminal units
- GB/T 19232-2003
- GB/T 7725-2016

ML92
Shanghai
China



Chillers & Heat Pumps
- GB/T 10870-2014

ML93
Shanghai
China



Precision air conditioners
- GB/T 17758-2010

ML94
Foshan
China



Precision air conditioners
- GB/T 17758-2010

The excellence of our solutions is the result of a leading-edge organisation, structured on specialized manufacturing hubs and laboratories, applying lean manufacturing and continuous improvement principles together with an integrated approach to quality, environment and health and safety, consistently with Mitsubishi Electric guiding principles.

MANUFACTURING HUBS

M11
Bassano
Italy

Productive area:
12,500 m²



- Liquid chillers
- Reversible chillers
- Heat pumps up to 500 kW

- ISO 9001 / ISO 14001 / ISO 18001
- OHSAS18001

M12
Belluno
Italy

Productive area:
25,000 m²



- Liquid chillers
- Reversible chillers/ Heat pumps
- Rooftop units
- Shell&tube evaporators

- ISO 9001 / ISO 14001 / ISO 18001
- OHSAS18001

M13
Belluno
Italy

Productive area:
7,000 m²



- Air handling units

- ISO 9001 / ISO 14001 / ISO 18001
- OHSAS18001

M14
Treviso
Italy

Productive area:
10,000 m²



- Residential chillers
- Heat pumps up to 150kW
- Hydronic terminals
- HPAC units

- ISO 9001 / ISO 14001 / ISO 18001
- OHSAS18001

M21
Valle Salimbene
Italy

Productive area:
36,500 m²



- Chillers and Heat Pumps from 5 to 300 kW

- ISO 9001 and ISO 14001

M22
Valle Salimbene
Italy

Productive area:
2,300 m²



- Large Capacity Chillers
- Large Capacity Heat Pumps

- ISO 9001 and ISO 14001

M23
Zeccone
Italy

Productive area:
7,500 m²



- Precision air conditioners
- Telecom air conditioners

- ISO 9001 and ISO 14001

M91
Shanghai
China

Productive area:
15,000 m²



- Liquid chillers
- Reversible chillers for the Eastern market

- ISO 9001, ISO 14001, ISO18001
- OHSAS18001

M92
Shanghai
China

Productive area:
2,500 m²



- HPAC units for the Eastern market

- ISO 9001, ISO 14001, ISO18001

M93
Shanghai
China

Productive area:
3,000 m²



- Ahu units
- Fan coils
- Aluminium fin and copper tube coils

- ISO 9001, ISO 14001, ISO18001

M94
Shanghai
China

Productive area:
2,000 m²



- Shell & tube Heat Exchangers
- Condensers and evaporators

- ISO 9001, ISO 14001, ISO18001

M95
Foshan
China

Productive area:
3,000 m²



- Precision & Telecom air conditioners for South East Asia

- ISO 9001, ISO 14001, ISO18001

M81
Bangalore
India

Productive area:
2,500 m²



- HPAC units
- screw compressor chillers

- ISO 9001

QUALITY, ENVIRONMENT, SAFETY

In consistency with Mitsubishi Electric 7 guiding principles, Mitsubishi Electric Hydronics & IT Cooling Systems SpA aims at making a positive difference towards a more sustainable HVAC industry.

We do this by responsibly managing the environmental, social, and economical impacts of its activities and solutions. This is a key element of RC and Climaveneta's value proposition and the best guarantee to deliver sustainable value to our customers, employees, and all of our stakeholders.

Quality

Following Mitsubishi Electric principles, satisfying and exceeding customers' and stakeholders' expectations are core elements of Climaveneta and RC approach.
Company and product certifications play a crucial role within our approach to Quality, enhancing our care to comply with the regulations of the countries and markets where we operate.

Environment

Comfort and sustainability are key elements of our mission, to be pursued in all the company choices, from product development to operations management.

This approach reflects a company strategy based on a business model focused on highest sustainability, extending from the traditional attention to energy efficiency and reduced environmental impact of the product, to the whole manufacturing process.
From this perspective ISO 14001 certification means, above all, systematic implementation of explicit projects to reduce the environmental impact of the company globally. At the same time Mitsubishi Electric Hydronics & IT Cooling Systems as a leading company in sustainable HVAC solutions, recognizes and supports the diffusion of building performance rating systems and green certification protocols.

Safety

For Mitsubishi Electric Hydronic & IT Cooling Systems S.p.A., safety is a core element of the organizational culture, proven by the OHSAS 18001 certification obtained in June 2015 and by the BBS - Behaviour Based Safety – project, gradually extended to all our establishments.

Key to symbols and notes

Functions

COOLING	Cooling
HEATING	Heating
RE-HEATING	Re Heating
REV. HEAT PUMP	Heat Pump Reversible
HUMIDIFICATION	Humidification
FREE COOLING	Free Cooling
PLATE	Plate
DEUMIDIFICATION	Deumidification
2 PIPES	2 Pipe
4 PIPES	4 Pipe
60° HEATING	Heating 60°C
65° HEATING	Heating 65°C
78° HEATING	Heating 78°C
4 PIPE SYSTEM	Combined production of heating and cooling
EVAPOR. FREE COOLING	Evaporative free cooling
HOT WATER	Hot water
THERMODYNAMIC	Thermodynamic

Refrigerant

R REFRIGERANT	Refrigerant gas
R HFC R-134a	R-134a
R HFC R-407C	R-407C
R HFC R-410A	R-410A
R HFO1234ze	HFO-1234ze

Compressors

ROTATIVE	Rotary compressor
SCROLL	Scroll compressor
SCREW	Screw compressor
CENTRIFUGAL	Centrifugal compressor
RECIPROCATING	Reciprocating compressor

Fan

AXIAL	Axial fan
EC AXIAL	EC axial fan
CENTRIFUGAL	Centrifugal fan
PLUG FAN	Plug fan
TANGENTIAL	Tangential fan
EC FAN	EC Fan

Exchangers

P PLATES	Plates
T SHELL & TUBES	Shell & Tubes
FL FLOODED	Flooded evaporator

Tipology

FANCOIL	Fancoil
DUCT	Duct
WALL INSTALLATION	Wall
CASSETTE	Cassette

Recovery

PLATE	Plate
ROTARY	Rotary enthalpy recovery
REFRIG. BOOSTER	Refrigerant booster
THERMODYNAMIC	Thermodynamic

Other features

L1 CLASS LEAKAGE	Leakage L1
A ENERGY CLASS	Energy Class A
CONTROLLER	Controller
ErP	ErP Compliant
EUROVENT	Eurovent
NEW!	New
FULL FLOATING	Full Floating
INVERTER	Inverter Driven
VPF	VPF
VSPEED	VSpeed
EEV	Electronic Expansion
VAIR	VAir
	Patent Pending
4	4 Patents Pending
EUROVENT	Eurovent UTA
ErP	ErP 2018
ErP	ErP 2021

The functions and characteristics are subject to each model's size, configuration, optional.
Performance data, pictures, schematics and other features contained in this document are provided exclusively on informational purpose about our product range. They refer to standard execution, applicable to the European Union market.
They can be varied any time without notice. For further information please contact Mitsubishi Electric Hydronics & IT Cooling Systems S.p.A. Sales/Marketing Offices or visit www.climaveneta.com

Index

CHILLERS

Pag.	Product	Capacity kW	Functions	Refrigerant	Compressors	Fan	Exchangers
	AIR COOLED CHILLERS						
16	i-BX 004 - 013	4,30-12,9	COOLING	HFC R-410A	SCROLL	AXIAL	PLATES
18	i-NX 0151P - 0502P	43,9-129	COOLING	HFC R-410A	SCROLL	AXIAL	PLATES
22	NX 0152P - 0812P	39,2-227	COOLING	HFC R-410A	SCROLL	AXIAL	PLATES
30	NX 0614P - 1214P	159-327	COOLING	HFC R-410A	SCROLL	AXIAL	PLATES
34	NX 0614T - 1214T	159-352	COOLING	HFC R-410A	SCROLL	AXIAL	SHELL & TUBES
42	NECS 1314 - 3218	334-885	COOLING	HFC R-410A	SCROLL	AXIAL	SHELL & TUBES
48	FX 0751 - 1801	140-396	COOLING	HFC R-134a	SCREW	AXIAL	PLATES SHELL & TUBES
52	FX 1502 - 7223	289-1710	COOLING	HFC R-134a	SCREW	AXIAL	SHELL & TUBES
64	FX HFO 1502 - 7823	235-1463	COOLING	HFO1234ze	SCREW	AXIAL	SHELL & TUBES
68	i-FX (1+i) 2602 - 5403	567-1273	COOLING	HFC R-134a	SCREW	AXIAL	SHELL & TUBES
72	TECS2 0211 - 1154	220-1324	COOLING	HFC R-134a	CENTRIFUGAL	AXIAL EC FAN	FLOODED
78	TECS2 HFO 0351 - 1053	339-1017	COOLING	HFO1234ze	CENTRIFUGAL	EC FAN	FLOODED
	WATER COOLED CHILLERS						
80	NX-W 0122 - 1204	38,1-398	COOLING	HFC R-410A	SCROLL		PLATES
84	FX-W 0551 - 1752	124-401	COOLING	HFC R-134a	SCREW		SHELL & TUBES
88	FOCS2-W 1301 - 9604	306-2416	COOLING	HFC R-134a	SCREW		SHELL & TUBES
94	FOCS3-W 0551 - 4752	188-1693	COOLING	HFC R-134a	SCREW		FLOODED
98	i-FX-W (1+i) 1402 - 4652	488-1784	COOLING	HFC R-134a	SCREW		FLOODED
102	TECS2-W HFO 0351 - 1414	340-1364	COOLING	HFO1234ze	CENTRIFUGAL		FLOODED
104	TX-W 1A00 - 6D00	246-4191	COOLING	HFC R-134a	CENTRIFUGAL		FLOODED
	CONDENSERLESS CHILLERS						
112	HE 0011 - 0121	4,70-32,4	COOLING	HFC R-407C	SCROLL		PLATES
114	NECS-ME 0152 - 1604	39,5-432	COOLING	HFC R-410A	SCROLL		PLATES
118	FOCS-ME 0401 - 1902	79,2-410	COOLING	HFC R-134a	SCREW		SHELL & TUBES
120	FOCS-ME 1001 - 9604	219-2240	COOLING	HFC R-134a	SCREW		SHELL & TUBES
	AIR COOLED CHILLERS - FREECOOLING						
124	TECS-FC 0211 - 1204	302-1693	COOLING FREE COOLING	HFC R-134a	CENTRIFUGAL	EC FAN	FLOODED
	AIR COOLED CHILLERS - EVAPORATIVE FREECOOLING						
130	TECS-EFC 0211 - 1204	300-1682	COOLING EVAPOR. FREE COOLING	HFC R-134a	CENTRIFUGAL	EC AXIAL	FLOODED

HEAT PUMPS

Pag.	Product	Capacity kW	Functions	Refrigerant	Compressors	Fan	Exchangers
	AIR TO WATER REVERSIBLE HEAT PUMPS						
140	AWR MTD2 XE 0011ms - 0091t	5,20-29,2	COOLING	HFC R-410A	SCROLL	AXIAL	PLATES
144	i-BX-N 004 - 013	4,20-12,4	COOLING	HFC R-410A	SCROLL	AXIAL	PLATES
146	i-KIR2-MTD 0011m - 0061m	4,03-12,5	COOLING	HFC R-410A	SCROLL	EC AXIAL	PLATES
150	i-KIR-MTD 0075t - 0151t	15,6-30,5	COOLING	HFC R-410A	SCROLL	EC AXIAL	PLATES
154	i-NRG 0061m - 0061t	14,7-14,7	COOLING	HFC R-410A	SCROLL	EC FAN	PLATES
158	AWR DHW2 XE 0021m - 0101ts	5,80-22,8	COOLING	HFC R-407C	SCROLL	AXIAL	PLATES
164	AWR-HT 0122 - 0302	34,0-91,7	COOLING	HFC R-407C	SCROLL	AXIAL	PLATES
166	AWR-HT 0404 - 0604	116-181	COOLING	HFC R-407C	SCROLL	AXIAL	PLATES
170	MICS-N FFT 0072 - 0182	17,3-42,5	COOLING	HFC R-410A	SCROLL	AXIAL	PLATES
172	NX-N 0152P - 0812P	35,8-219	COOLING	HFC R-410A	SCROLL	AXIAL	PLATES
182	NX-N 0604P - 1204P	148-319	COOLING	HFC R-410A	SCROLL	AXIAL	PLATES
186	NECS-N 0202T - 0612T	48,0-151	COOLING	HFC R-410A	SCROLL	AXIAL	SHELL & TUBES
190	NX-N 0604T - 1204T	148-335	COOLING	HFC R-410A	SCROLL	AXIAL	SHELL & TUBES
198	NECS-N 1314 - 3218	320-833	COOLING	HFC R-410A	SCROLL	AXIAL	SHELL & TUBES
204	FOCS-N 2022 - 4822	441-1162	COOLING	HFC R-134a	SCREW	AXIAL	SHELL & TUBES
210	MICS-CN 0072 - 0122	17,3-30,3	COOLING	HFC R-410A	SCROLL	CENTRIFUGAL	PLATES
212	NX-CN 0072 - 1104	18,0-265	COOLING	HFC R-410A	SCROLL	EC FAN	PLATES
	AIR TO WATER HEAT PUMPS, ONLY HEATING						
222	i-KI-MTD 0075t - 0151t	21,6-44,4		HFC R-410A	SCROLL	AXIAL	PLATES
226	AW-HT 0122 - 0302	38,0-102		HFC R-407C	SCROLL	AXIAL	PLATES
232	AW-HT 0404 - 0604	135-205		HFC R-407C	SCROLL	AXIAL	PLATES
	WATER TO WATER REVERSIBLE HEAT PUMPS						
238	WWR MTD2 0011ms - 0121ts	5,20-33,4	COOLING	HFC R-410A	SCROLL		PLATES
244	WWR DHW2 0011ms - 0121t	5,10-34,8	COOLING	HFC R-407C	SCROLL		PLATES
250	NX-WN 0122 - 1204	37,5-396	COOLING	HFC R-410A	SCROLL		PLATES
	WATER TO WATER HEAT PUMPS, HEATING ONLY						
256	WW-HT 0071 - 0302	27,5-109					
260	EW-HT 0152 - 0612	70,2-279					
	WATER TO WATER HEAT PUMPS, REVERSIBLE ON HYDRAULIC SIDE						
262	WWH-HT 0071 - 0302	23,6-94,2	COOLING	HFC R-410A	SCROLL		PLATES
266	NX-W /H 0122 - 1204	38,1-398	COOLING	HFC R-410A	SCROLL		PLATES
272	FOCS-W /H 0401 - 1302	87,0-298	COOLING	HFC R-134a	SCREW		SHELL & TUBES
276	FOCS2-W /H 1301 - 9604	306-2416	COOLING	HFC R-134a	SCREW		SHELL & TUBES
282	i-FX-W (1+i) /H 1402 - 4652	532-1784	COOLING	HFC R-134a	SCREW		FLOODED
	GEOTHERMAL REVERSIBLE HEAT PUMPS						
286	BWR MTD2 0011ms - 0121ts	5,08-43,6	COOLING	HFC R-410A	SCROLL		PLATES
	GEOTHERMAL HEAT PUMPS, HEATING ONLY						
292	BW-HT 0071 - 0302	20,3-79,1		HFC R-410A	SCROLL		PLATES

UNITS FOR SIMULTANEOUS AND INDEPENDENT PRODUCTION OF HOT AND COLD WATER

Pag.	Product	Capacity kW	Functions	Refrigerant	Compressors	Fan	Exchangers
	MULTIFUNCTION UNITS AIR SOURCE						
298	NX-Q 0152P - 0602P	43,9-169	4 PIPE SYSTEM	HFC R-410A	SCROLL	AXIAL	PLATES
302	NECS-Q 0604 - 1204	142-311	4 PIPE SYSTEM	HFC R-410A	SCROLL	AXIAL	PLATES
306	NECS-Q 1314 - 3218	332-850	4 PIPE SYSTEM	HFC R-410A	SCROLL	AXIAL	SHELL & TUBES
312	ERACS2-Q 1062 - 3222	199-826	4 PIPE SYSTEM	HFC R-134a	SCREW	AXIAL EC FAN	SHELL & TUBES
322	i-FX-Q2 0502 - 1102	443-1125	4 PIPE SYSTEM	HFC R-134a	SCREW	EC FAN	SHELL & TUBES
	MULTIFUNCTION UNITS WATER SOURCE						
328	NECS-WQ 0152 - 1204	48,4-412	4 PIPE SYSTEM	HFC R-410A	SCROLL		PLATES
332	ERACS2-WQ 0802 - 1502	189-363	4 PIPE SYSTEM	HFC R-134a	SCREW		SHELL & TUBES

ROOFTOP UNITS

Pag.	Product	Capacity kW	Functions	Refrigerant	Compressors	Recovery	Int. sect.	Out. sect.
	AIR TO AIR ROOFTOP UNIT, ONLY COOLING							
338	WSM-T 0082 - 0152	23,4-55,0	COOLING FREE COOLING	HFC R-410A	SCROLL	REFRIG. BOOSTER	PLUG FAN	AXIAL
340	WSM-T 0162 - 1204	50,9-422	COOLING FREE COOLING	HFC R-410A	SCROLL	PLATE REFRIG. BOOSTER	PLUG FAN	AXIAL
342	WRX-T 0162 - 0804	50,8-240	COOLING FREE COOLING	HFC R-410A	SCROLL	PLATE ROTARY REFRIG. BOOSTER THERMODYNAMIC	PLUG FAN	
344	WSM2-T 0264 - 0604	81,1-182	COOLING FREE COOLING	HFC R-410A	SCROLL	PLATE ROTARY REFRIG. BOOSTER	PLUG FAN	
	REVERSIBLE AIR COOLED ROOFTOP UNIT							
346	WSM A082 - A152	24,4-54,9	COOLING HEATING FREE COOLING	HFC R-410A	SCROLL	REFRIG. BOOSTER	PLUG FAN	AXIAL
348	WSM A164 - A1004	51,7-317	COOLING HEATING FREE COOLING	HFC R-410A	SCROLL	PLATE REFRIG. BOOSTER	PLUG FAN	AXIAL
350	WRX 0162 - 0804	50,8-240	COOLING HEATING FREE COOLING	HFC R-410A	SCROLL	PLATE ROTARY REFRIG. BOOSTER THERMODYNAMIC	PLUG FAN	
354	WSM2 0264 - 0604	81,1-182	COOLING HEATING FREE COOLING	HFC R-410A	SCROLL	PLATE ROTARY REFRIG. BOOSTER	PLUG FAN	

AIR HANDLING UNITS

Pag.	Product
	CONFIGURABLE AIR HANDLING UNITS
358	WIZARD

HYDRONIC TERMINALS

Pag.	Product	Capacity kW	Tipology	Functions	Fan
	FAN COILS				
362	a-LIFE2 0102 - 1004	1,50-7,50	FANCOIL	2 PIPES 4 PIPES	CENTRIFUGAL
376	i-LIFE2 0202 - 1004	1,82-7,50	FANCOIL	2 PIPES 4 PIPES	CENTRIFUGAL
384	a-LIFE2 HP 0302 - 1204	2,88-8,60	FANCOIL	2 PIPES 4 PIPES	CENTRIFUGAL
394	i-LIFE2 HP 0202 - 1204	2,00-8,76	FANCOIL	2 PIPES 4 PIPES	CENTRIFUGAL
400	i-LIFE2 SLIM 080 - 370	0,76-3,76	FANCOIL	2 PIPES	TANGENTIAL
	HI-WALL TYPE TERMINALS				
406	MHD2 30 - 60	2,15-4,63	WALL INSTALLATION	2 PIPES	TANGENTIAL
	CASSETTE TYPE TERMINALS				
410	a-CHD 0606 - 2209	3,20-11,3	CASSETTE	2 PIPES 4 PIPES	CENTRIFUGAL
414	a-CND 0600 - 1200	1,58-3,31	CASSETTE	2 PIPES 4 PIPES	CENTRIFUGAL
418	i-CHD 0706 - 2209	4,56-9,42	CASSETTE	2 PIPES	CENTRIFUGAL
422	i-CND 0600 - 1200	1,67-3,06	CASSETTE	2 PIPES 4 PIPES	CENTRIFUGAL
	DUCTED TYPE TERMINALS				
426	a-HWD2 102 - 902	5,87-21,9	DUCT	2 PIPES 4 PIPES	CENTRIFUGAL
432	i-HWD2 102 - 902	6,20-22,3	DUCT	2 PIPES 4 PIPES	CENTRIFUGAL
	HEAT RECUPERATORS				
438	HRD2 050 - 410	3,68-31,4			
440	WTA 0021 - 0126	13,2-76,3			

CONTROL, SUPERVISION AND OPTIMISATION SYSTEMS

Pag.	Product
	GROUP DEVICES
444	ClimaPRO
445	MANAGER 3000
446	SEQUENCER
	IDRORELAX
447	IDRORELAX

ANCILLARY PRODUCTS

Pag.	Product	Capacity kW	Functions	Refrigerant	Compressors	Fan
	CONDENSING UNITS					
450	BRAT-MC 0011 - 0121	5,61-33,4	COOLING	HFC R-410A	SCROLL	AXIAL
454	HCAT 0152 - 0604	37,7-170	COOLING	HFC R-407C	SCROLL	AXIAL
458	MCAT 0501 - 1422	110-351	COOLING	HFC R-407C	RECIPROCATING	AXIAL
	REMOTE CONDENSERS					
462	NHCR 0011-21 - 0121	7,90-40,1	COOLING	HFC R-407C		AXIAL
464	NCE 118A - 528B	45,0-566	COOLING	HFC R-410A		AXIAL
468	FCE 218A - 828C	83,0-929	COOLING	HFC R-134a		AXIAL

<<< BACK INDEX

i-BX 004 - 013
i-NX 0151P - 0502P
NX 0152P - 0812P
NX 0614P - 1214P
NX 0614T - 1214T
NECS 1314 - 3218
FX 0751 - 1801
FX 1502 - 7223
FX HFO 1502 - 7823
i-FX (1+i) 2602 - 5403
TECS2 0211 - 1154
TECS2 HFO 0351 - 1053
NX-W 0122 - 1204
FX-W 0551 - 1752
FOCS2-W 1301 - 9604
FOCS3-W 0551 - 4752
i-FX-W (1+i) 1402 - 4652
TECS2-W HFO 0351 - 1414
TX-W 1A00 - 6D00
HE 0011 - 0121
NECS-ME 0152 - 1604
FOCS-ME 0401 - 1902
FOCS-ME 1001 - 9604
TECS-FC 0211 - 1204
TECS-EFC 0211 - 1204

CHILLERS

CHILLERS

i-BX 004 - 013

Chiller, air source for outdoor installation 4,30-12,9 kW



Outdoor unit for the production of chilled/hot water with variable speed (Inverter Driven) Scroll compressors, optimized for R410A in a single-circuit configuration, axial-flow fans, condensing coil with copper tubes and aluminum fins, plate heat exchanger on water side and electronic expansion valve as standard equipment.
Flexible and reliable unit; it easily adapts itself to different thermal load conditions thanks to the precise temperature control together with the use of inverter technology. The high performance's level, both full and partial load, is achieved thanks to the accurate unit's design and to the use of variable speed (inverter) motor.
The chillers i-BX are used in many applications, even completely different from each other, suitable for comfort and industrial processes, without making any compromises.

Version

B Basic

Features

ErP READY

The highest level of efficiency at part load, thanks to the inverter technology, can meet and exceed the minimum seasonal efficiency for cooling, SEER, according with the eco-sustainable design requirements for all products using energy. For this reason, the unit represents the best choice for all the hydronic application on the residential and commercial markets. The unit is suitable also for industrial market, satisfying the seasonal energy performance ratio SEPR.

SYSTEM EFFICIENCY

The unit is designed as a system: all components are regulated using proprietary control's logic for the highest efficiency.

HIGH EFFICIENCY AT PARTIAL LOAD

High seasonal efficiency in both heating and cooling mode, using DC inverter technology to modulate compressor operation and deliver the exact amount of energy based on the actual needs of the building. High efficiency for low energy consumption during the operating hours.

HIGH EFFICIENCY COMPONENTS

In terms of improving performance and reducing power consumption, the electronic thermostatic valve is an important component that maximises system efficiency, same for the choise the hydronic kit with inverter water pump and the modulating the fans speed as standard equipments.

WIDE OPERATING RANGE

Full load operation is ensured with outdoor air temperature up to 46°C during summer and down to -10°C of outdoor air temperature during winter. Production of evaporator leaving water temperature from -8°C to 20°C.

INTEGRATED HYDRONIC MODULE

The integrated hydronic include all the water circuit components (anti-freeze electrical heater on plate heat exchanger, air vents, flow switch, water filter, safety valve, EC water pumps, expansion tank) so as to optimize installation space, times and costs.

Accessory

- Remote keyboard
- Cascade management kit
- Copper-Aluminum heat exchanger coils with epoxy treatment
- Copper-Copper heat exchanger coils
- Buffer tank
- Serial card RS485 for ModBus
- Rubber anti-vibration mounting kit

Controls

NADISYSTEM

The keypad features function controls and a complete LCD display for viewing data and activating the unit, via a multilevel menu. The remote keyboard kit wired indoor and outdoor temperature sensors allow dynamic control of delivery temperature water, optimizing comfort in the room and increasing the energy efficiency.
The electronic board allows you to manage:
-outdoor air temperature sensor on board for climatic curve
-the built-in clock can be used to create an operating profile containing time bands for space cooling
-night mode to limit the noise level of the units. Noise level is reduced limiting the maximum speed of the compressor and fans.
-up to 4 units in cascade (with the accessories N-CM)



i-BX			004	006	008	010	013
Power supply		V/ph/Hz	230/1/50	230/1/50	230/1/50	230/1/50	230/1/50
PERFORMANCE							
COOLING ONLY (GROSS VALUE)							
Cooling capacity	(1)	kW	4,30	6,11	8,10	10,6	12,9
Total power input	(1)	kW	1,55	2,12	2,82	3,64	4,74
EER	(1)	kW/kW	2,77	2,88	2,87	2,91	2,72
ESEER	(1)	kW/kW	4,20	4,36	4,70	4,29	4,55
COOLING ONLY (EN14511 VALUE)							
Cooling capacity	(1)(2)	kW	4,30	6,11	8,11	10,6	12,9
EER	(1)(2)	kW/kW	2,82	2,92	2,92	2,92	2,74
ESEER	(1)(2)	kW/kW	4,53	4,60	5,08	4,34	4,69
Cooling energy class			C	B	B	B	C
ENERGY EFFICIENCY							
SEASONAL EFFICIENCY IN COOLING (Reg. EU 2016/2281)							
Ambient refrigeration							
Prated,c	(7)	kW	4,30	6,11	8,11	10,6	12,9
SEER	(7)(8)		4,38	4,43	4,93	4,39	4,78
Performance ηs	(7)(9)	%	172	174	194	172	188
EXCHANGERS							
HEAT EXCHANGER USER SIDE IN REFRIGERATION							
Water flow		l/s	0,21	0,29	0,39	0,51	0,62
Available unit's head	(1)	kPa	50,7	38,1	61,8	55,6	55,3
REFRIGERANT CIRCUIT							
Compressors nr.		N°	1	1	1	1	1
No. Circuits		N°	1	1	1	1	1
Refrigerant charge		kg	1,65	2,10			
NOISE LEVEL							
Sound Pressure	(3)	dB(A)	33	34	35	38	39
Sound power level in cooling	(4)(5)	dB(A)	64	65	66	69	70
SIZE AND WEIGHT							
A	(6)	mm	900	900	900	900	900
B	(6)	mm	370	370	420	420	420
H	(6)	mm	940	940	1240	1240	1240
Operating weight	(6)	kg	70	80	95	110	125

Notes:
1 Plant (side) cooling exchanger water (in/out) 12°C/7°C; Source (side) heat exchanger air (in) 35°C.
2 Values in compliance with EN14511-3:2013.
3 Average sound pressure level at 10m distance, unit in a free field on a reflective surface; non-binding value calculated from the sound power level.
4 Sound power on the basis of measurements made in compliance with ISO 9614.
5 Sound power level in cooling, outdoors.
6 Unit in standard configuration/execution, without optional accessories.
7 Seasonal energy efficiency of the cooling environment [REGULATION (EU) N. 2016/2281]
8 Seasonal space heating energy index
9 Seasonal energy efficiency of the space cooling
The units highlighted in this publication contain HFC R410A [GWP_{100} 2088] fluorinated greenhouse gases.
Certified data in EUROVENT

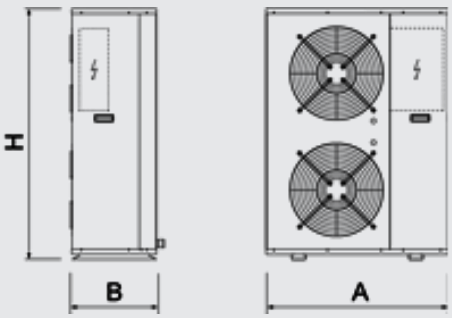

CHILLERS

i-NX 0151P - 0502P

Chiller, air source for outdoor installation 43,9-129 kW



Outdoor unit for the production of chilled water with fixed speed and variable speed (Inverter Driven) Scroll compressors, optimized for R410A in a single-circuit configuration, axial-flow fans, micro-channel full-aluminum air coils and electronic expansion valve as standard equipment.
Flexible and reliable unit; it easily adapts itself to different thermal load conditions thanks to the precise temperature control together with the use of inverter technology. The high performance's level, both full and partial load, is achieved thanks to the accurate unit's design and to the use of fixed speed motor together with variable speed (inverter) motor.

Version

-	Basic
SL	Super-low noise version

Configurations

-	Basic function
D	Partial condensing heat recovery function

Features

HIGH EFFICIENCY

Unit with high efficiency and reduced energy consumption, thanks to the inverter technology, contributing to lower operating costs and therefore achieving a quick return on investment.

ErP READY

The highest level of efficiency at part load, thanks to the inverter technology, can meet and exceed the minimum seasonal efficiency for cooling, SEER, according with the eco-sustainable design requirements for all products using energy. The units already comply with the minimum seasonal energy efficiency requirements that will start from 2021. For this reason, the unit represents the best choice for all the hydronic application on the residential and commercial markets. The unit is suitable also for industrial market, satisfying the seasonal energy performance ratio SEPR.

VARIBLE PRIMARY FLOW (OPTION)

Energy saving due to variable pump speed management based on load demand and the variable flow assures the functioning of the units also with critical working conditions.

INTEGRATED HYDRONIC MODULE

The built-in hydronic module already contains the main water circuit components; it is available as option with single or twin in-line pump, for achieving low or high head, fixed or variable speed and buffer tank.

ELECTRONIC EXPANSION VALVE SUPPLIED STANDARD

The use of the electronic expansion valve generates considerable benefits, especially in cases of variable demand and at different working conditions. It guaranteed energy saving due to efficiency optimization in various different working conditions. The electronic thermostatic valve allows you to obtain speed in reaching machine stability and an extension of the operating limits.

ALUMINIUM MICRO-CHANNEL HEAT EXCHANGERS

This new range of chiller uses aluminum micro-channel condensers that ensure a premium level of efficiency. This solution also allows to reduce the refrigerant charge with respect to traditional copper/aluminium coils and to reduce the weight of the unit.

WIDE OPERATING RANGE

Full load operation is ensured with outdoor air temperature up to 48°C during summer. Dedicated accessories allow the unit operation down to -20°C of outdoor air temperature during winter.
Production of evaporator leaving water temperature from -10°C to 20°C.

Accessory

- Remote control keyboard (distance to 200m and to 500m)
- Set-up for remote connectivity with ModBus/Echelon protocol cards
- Compressor power factor correction
- Soft start
- Hydronic kit available in different configurations with 1 or 2 pumps fixed speed or variable speed and buffer tank
- VPF (Variable Primary Flow) system
- EC fans with electronic DC brushless motor
- LOW NOISE KIT (only on no silenced versions)
- User Limit Control (U.L.C.) function allows a startup of the unit in all critical conditions of water and air temperature, always under the operating limits of the unit.
- Night mode is a system setting to limit maximum noise level of the unit.
- Microchannel coils with e-coating protection
- Traditional coils with copper tubes and alluminium fins, also available with prepainted fins or Fin Guard Silver protective treatment.
- Copper-Copper heat exchanger coils

Controls

Electronic control W3000TE

The brand new W3000TE controller offers advanced functions and algorithms. The keypad W3000 Compact, as standard equipment, features function controls and a complete LCD display for viewing data and activating the unit, via a multilevel menu, with settable display language. In addition to or as an alternative, the KIPlink is available - Keyboard In Your Pocket - is the innovative user interface based on WiFi technology that allows one to operate on the unit directly from the smartphone or tablet. Using KIPlink, it is possible to turn the unit on and off, adjust the set-point, plot the main operating variables, monitor in detail the status of the refrigerant circuits, the compressors, the fans and the pumps (if present) and display and reset the possible alarms. The regulation features the continuous modulation of capacity, based on sequential adjustment + DIP referring to the leaving water temperature (neutral zone adjustment + DIP on outlet temperature probe, for the 0151 size). Diagnostics include complete alarm management, with "blackbox" functions (via PC) and alarm log (display or PC) for best analysis of unit be haviour. The built-in clock can be used to create an operating profile containing up to 4 typical days and 10 time bands, essential for efficient programming of energy production. Optional proprietary devices can perform the adjustment of the resources in systems made of several units. Consumption metering and performance measurement are possible as well. Supervision is available with different options, using proprietary devices or by integration into third party systems using ModBus, BACnet, BACnet-over-IP and Echelon LonWorks protocols. A dedicated wall-mounted keypad can be used for remote control of all the functions. Optionally (VPF package), capacity modulation can be integrated with hydraulic flow modulation, thanks to inverter-driven pumps and to specific resources for the hydraulic circuit.



i-NX			0151P	0182P	0202P	0262P	0302P	0352P	0402P	0502P
Power supply		V/ph/Hz	400/3+N/50	400/3+N/50	400/3+N/50	400/3+N/50	400/3+N/50	400/3/50	400/3/50	400/3/50
PERFORMANCE										
COOLING ONLY (GROSS VALUE)										
Cooling capacity	(1)	kW	43,9	52,9	63,1	72,1	83,8	101	120	129
Total power input	(1)	kW	15,7	18,8	21,4	25,0	29,2	35,2	41,9	46,8
EER	(1)	kW/kW	2,80	2,81	2,95	2,88	2,87	2,87	2,86	2,76
ESEER	(1)	kW/kW	4,56	4,55	4,51	4,54	4,51	4,66	4,58	4,53
COOLING ONLY (EN14511 VALUE)										
Cooling capacity	(1)(2)	kW	43,6	52,6	62,7	71,7	83,4	100	119	129
EER	(1)(2)	kW/kW	2,73	2,75	2,88	2,82	2,82	2,82	2,80	2,72
ESEER	(1)(2)	kW/kW	4,27	4,19	4,17	4,23	4,24	4,36	4,27	4,25
Cooling energy class			C	C	C	C	C	C	C	C
ENERGY EFFICIENCY										
SEASONAL EFFICIENCY IN COOLING (Reg. EU 2016/2281)										
Ambient refrigeration										
Prated,c	(7)	kW	43,6	52,6	62,7	71,7	83,4	100	119	129
SEER	(7)(8)		4,15	4,11	4,13	4,18	4,23	4,36	4,32	4,30
Performance ηs	(7)(9)	%	163	161	162	164	166	171	170	169
EXCHANGERS										
HEAT EXCHANGER USER SIDE IN REFRIGERATION										
Water flow	(1)	l/s	2,10	2,53	3,02	3,45	4,01	4,82	5,73	6,18
Pressure drop	(1)	kPa	37,2	41,2	42,3	39,4	35,0	36,2	42,9	38,9
REFRIGERANT CIRCUIT										
Compressors nr.		N°	1	2	2	2	2	2	2	2
No. Circuits		N°	1	1	1	1	1	1	1	1
Refrigerant charge		kg	7,00	7,20	8,90	9,40	9,50	12,5	12,9	13,5
NOISE LEVEL										
Sound Pressure	(3)	dB(A)	51	52	53	53	54	55	57	57
Sound power level in cooling	(4)(5)	dB(A)	83	84	85	85	86	87	89	89
SIZE AND WEIGHT										
A	(6)	mm	2000	2000	2625	2625	2625	3250	3250	3250
B	(6)	mm	1350	1350	1350	1350	1350	1350	1350	1350
H	(6)	mm	2070	2070	2070	2070	2070	2170	2170	2170
Operating weight	(6)	kg	600	660	750	780	810	1060	1070	1080

Notes:
1 Plant (side) cooling exchanger water (in/out) 12°C/7°C; Source (side) heat exchanger air (in) 35°C.
2 Values in compliance with EN14511-3:2013.
3 Average sound pressure level at 10m distance, unit in a free field on a reflective surface; non-binding value calculated from the sound power level.
4 Sound power on the basis of measurements made in compliance with ISO 9614.
5 Sound power level in cooling, outdoors.
6 Unit in standard configuration/execution, without optional accessories.
7 Seasonal energy efficiency of the cooling environment [REGULATION (EU) N. 2016/2281]
8 Seasonal space heating energy index
9 Seasonal energy efficiency of the space cooling
The units highlighted in this publication contain HFC R410A [GWP_{100} 2088] fluorinated greenhouse gases.
Certified data in EUROVENT

i-NX / SL			0151P	0182P	0202P	0262P	0302P	0352P	0402P	0502P
Power supply		V/ph/Hz	400/3+N/50	400/3+N/50	400/3+N/50	400/3+N/50	400/3/50	400/3/50	400/3/50	400/3/50
PERFORMANCE										
COOLING ONLY (GROSS VALUE)										
Cooling capacity	(1)	kW	42,6	51,2	60,1	68,1	81,2	96,7	115	124
Total power input	(1)	kW	14,4	17,8	20,9	24,5	28,3	33,9	39,3	44,3
EER	(1)	kW/kW	2,96	2,88	2,88	2,78	2,87	2,85	2,93	2,81
ESEER	(1)	kW/kW	4,48	4,58	4,49	4,55	4,54	4,75	4,78	4,70
COOLING ONLY (EN14511 VALUE)										
Cooling capacity	(1)(2)	kW	42,3	50,9	59,8	67,7	80,8	96,3	115	124
EER	(1)(2)	kW/kW	2,89	2,81	2,81	2,73	2,82	2,80	2,88	2,76
ESEER	(1)(2)	kW/kW	4,21	4,26	4,20	4,25	4,26	4,48	4,50	4,43
Cooling energy class			C	C	C	C	C	C	C	C
ENERGY EFFICIENCY										
SEASONAL EFFICIENCY IN COOLING (Reg. EU 2016/2281)										
Ambient refrigeration										
Prated,c	(7)	kW	42,3	50,9	59,8	67,7	80,8	96,3	115	124
SEER	(7)(8)		4,18	4,10	4,11	4,17	4,22	4,46	4,50	4,48
Performance ηs	(7)(9)	%	164	161	162	164	166	176	177	176
EXCHANGERS										
HEAT EXCHANGER USER SIDE IN REFRIGERATION										
Water flow	(1)	l/s	2,04	2,45	2,87	3,26	3,88	4,62	5,50	5,95
Pressure drop	(1)	kPa	35,1	38,7	38,3	35,2	32,9	33,2	39,6	36,0
REFRIGERANT CIRCUIT										
Compressors nr.		N°	1	2	2	2	2	2	2	2
No. Circuits		N°	1	1	1	1	1	1	1	1
Refrigerant charge		kg	8,10	8,30	8,70	9,20	11,8	12,3	14,7	15,2
NOISE LEVEL										
Sound Pressure	(3)	dB(A)	45	45	46	46	47	48	50	50
Sound power level in cooling	(4)(5)	dB(A)	77	77	78	78	79	80	82	82
SIZE AND WEIGHT										
A	(6)	mm	2625	2625	2625	2625	3250	3250	3875	3875
B	(6)	mm	1350	1350	1350	1350	1350	1350	1350	1350
H	(6)	mm	2070	2070	2070	2070	2170	2170	2170	2170
Operating weight	(6)	kg	700	760	790	820	980	1090	1180	1200

Notes:
1 Plant (side) cooling exchanger water (in/out) 12°C/7°C; Source (side) heat exchanger air (in) 35°C.
2 Values in compliance with EN14511-3:2013.
3 Average sound pressure level at 10m distance, unit in a free field on a reflective surface; non-binding value calculated from the sound power level.
4 Sound power on the basis of measurements made in compliance with ISO 9614.
5 Sound power level in cooling, outdoors.
6 Unit in standard configuration/execution, without optional accessories.
7 Seasonal energy efficiency of the cooling environment [REGULATION (EU) N. 2016/2281]
8 Seasonal space heating energy index
9 Seasonal energy efficiency of the space cooling
The units highlighted in this publication contain HFC R410A [GWP_{100} 2088] fluorinated greenhouse gases.
Certified data in EUROVENT

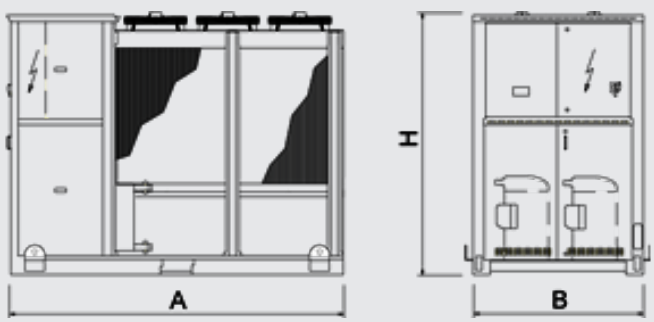

CHILLERS

NX 0152P - 0812P

Chiller, air source for outdoor installation
39,2-227 kW



Outdoor unit for the production of chilled water with hermetic rotary Scroll compressors, ozone-friendly refrigerant R410A, axial-flow fans, plate heat exchanger, micro-channel full-aluminum air coils and thermostatic or electronic expansion valve, according to the model. The range is composed by units equipped with two compressors in a single-circuit configuration.

Version

K	Key efficiency, compact version
LN-K	Low Noise, Key efficiency and compact version
SL-K	Super Low noise, Key efficiency and compact version
CA	Class A of efficiency
LN-CA	Low Noise, Class A of efficiency
SL-CA	Super Low noise version, Class A of efficiency

Configurations

-	Basic function
D	Partial condensing heat recovery function

Features

CLASS A EFFICIENCY

The full range is available with the Class A efficiency rating. Thanks to the generous sizing of the heat exchangers and an accurate control of the fan speed, the CA versions grant a premium level efficiency in every noise configuration.

ALUMINIUM MICRO-CHANNEL HEAT EXCHANGERS

The full aluminium micro-channel condenser coils deliver high efficiency whilst ensuring a reduced refrigerant volume and a lower unit weight. The e-coating protection (optional) grants the highest level of resistance to corrosion in any condition, even in the most aggressive environments.

ELECTRONIC EXPANSION VALVE SUPPLIED STANDARD

The use of the electronic expansion valve generates considerable benefits, especially in cases of variable demand and different external conditions. It has been introduced into these units as a result of accurate design choices concerning the cooling circuit and the optimisation of operation in various different working conditions. The electronic expansion valve comes standard in the high-efficieny CA version, optional for the compact K versions.

WIDE OPERATING RANGE

Full load operation is ensured with outdoor air temperature up to 46°C, partial load operation is possible up to or even beyond 50°C. The unit can produce chilled water at negative temperature (down to -10°C of leaving water temperature). Dedicated accessories allow the unit operation down to -20°C of outdoor air temperature.

INTEGRATED HYDRONIC GROUP

The optional built-in hydronic module already contains the main water circuit components; it is available with single or twin in-line, for achieving both low or high head.

Accessory

- Microchannel coils with e-coating protection
- Traditional coils with copper tubes and alluminium fins, also available with prepainted fins or Fin Guard Silver protective treatment.
- Copper-Copper heat exchanger coils
- Compressor power factor correction
- Soft start
- Compressor suction and discharge valves
- High and low pressure gauges
- DVVF and DVV2F devices for low air temperature operation
- Hydronic group with possible storage tank
- Anti-intrusion grills

Controls

Electronic control W3000 / W3000TE

The controller is available in two different versions according to the unit's model:

W3000 : electronic controller with Compact keyboard. It features an easy-to-use interface and a complete LCD display that allows consulting and intervening on the unit by means of a multi-lenguage menu, available in three languages: Italian, English and a further language among French, Spanish, German, Russian and Swedish. The alarm history display function can be enable by installing a real-time clock (optional).

W3000TE : electronic controller with Compact keyboard. It features an easy-to-use interface and a complete LCD display that allows consulting and intervening on the unit by means of a multi-language menu (19 languages are available). The diagnostics includes a complete alarm management, with the "black-box" and the alarm history display for enhanced analysis of the unit operation. The programmable timer manages a weekly schedule organised into time bands to optimise unit performance by minimising power consumption during periods of inactivity. Up to 10 daily time bands can be associated with different operating set points.

Both the controllers offer advanced functions and algorithms.

The regulation is based on the patented "Quickmind" water temperature regulation logic uses self-adapting control to maintain flow temperatures and optimise performance even in low water content scenarios. As an alternative, the proportional or proportional-integral regulations are also available.

Optional proprietary devices can perform the adjustment of the resources in systems made of several units. Consumption metering and performance measurement are possible as well.

Supervision can be easily developed via proprietary devices or the integration in third party systems by means of the most common protocols as ModBus, Bacnet, Bacnet-over-IP, LonWorks.

Compatibility with the remote keyboard (up to 8 units).

The defrosting (reversible unit only) follows a proprietary self-adaptive logic, which features the monitoring of several operational parameters. This allows to reduce the number and duration of the defrost cycles, with a benefit for the overall energy efficiency.



NX / K			0152P	0182P	0202P	0252P	0262P	0302P	0352P
Power supply		V/ph/Hz	400/3+N/50	400/3+N/50	400/3+N/50	400/3+N/50	400/3+N/50	400/3+N/50	400/3+N/50
PERFORMANCE									
COOLING ONLY (GROSS VALUE)									
Cooling capacity	(1)	kW	39,2	44,3	51,9	58,9	65,0	77,6	88,5
Total power input	(1)	kW	13,5	15,6	18,1	20,5	23,5	26,8	31,3
EER	(1)	kW/kW	2,90	2,84	2,87	2,87	2,77	2,90	2,83
ESEER	(1)	kW/kW	4,41	4,37	4,41	4,39	4,33	4,23	4,41
COOLING ONLY (EN14511 VALUE)									
Cooling capacity	(1)(2)	kW	39,0	44,0	51,6	58,6	64,7	77,2	87,9
EER	(1)(2)	kW/kW	2,83	2,78	2,80	2,82	2,71	2,84	2,76
ESEER	(1)(2)	kW/kW	4,19	4,15	4,20	4,20	4,17	4,06	4,16
Cooling energy class			C	C	C	C	C	C	C
ENERGY EFFICIENCY									
SEASONAL EFFICIENCY IN COOLING (Reg. EU 2016/2281)									
Ambient refrigeration									
Prated,c	(7)	kW	39,0	44,0	51,6	58,6	64,7	77,2	87,9
SEER	(7)(8)		3,81	3,81	3,90	3,95	3,91	3,91	3,96
Performance ηs	(7)(9)	%	149	149	153	155	154	153	155
EXCHANGERS									
HEAT EXCHANGER USER SIDE IN REFRIGERATION									
Water flow	(1)	l/s	1,88	2,12	2,48	2,82	3,11	3,71	4,23
Pressure drop	(1)	kPa	36,3	34,1	36,3	33,4	33,2	33,9	54,1
REFRIGERANT CIRCUIT									
Compressors nr.		N°	2	2	2	2	2	2	2
No. Circuits		N°	1	1	1	1	1	1	1
Refrigerant charge		kg	5,60	6,00	6,30	7,30	7,80	8,80	9,90
NOISE LEVEL									
Sound Pressure	(3)	dB(A)	51	51	52	52	52	53	54
Sound power level in cooling	(4)(5)	dB(A)	83	83	84	84	84	85	86
SIZE AND WEIGHT									
A	(6)	mm	1825	1825	1825	2395	2395	2395	2395
B	(6)	mm	1195	1195	1195	1195	1195	1195	1195
H	(6)	mm	1865	1865	1865	1865	1865	1865	1865
Operating weight	(6)	kg	470	480	490	540	550	570	660

NX / K			0402P	0452P	0502P	0552P	0602P	0702P
Power supply		V/ph/Hz	400/3/50	400/3/50	400/3/50	400/3/50	400/3/50	400/3/50
PERFORMANCE								
COOLING ONLY (GROSS VALUE)								
Cooling capacity	(1)	kW	102	114	127	144	166	189
Total power input	(1)	kW	35,4	40,1	44,9	52,3	57,7	67,9
EER	(1)	kW/kW	2,88	2,86	2,84	2,76	2,87	2,79
ESEER	(1)	kW/kW	4,04	4,13	4,13	4,24	4,08	4,15
COOLING ONLY (EN14511 VALUE)								
Cooling capacity	(1)(2)	kW	101	114	127	144	165	189
EER	(1)(2)	kW/kW	2,82	2,79	2,78	2,70	2,82	2,74
ESEER	(1)(2)	kW/kW	3,86	3,96	3,95	4,04	3,92	3,99
Cooling energy class			C	C	C	C	C	C
ENERGY EFFICIENCY								
SEASONAL EFFICIENCY IN COOLING (Reg. EU 2016/2281)								
Ambient refrigeration								
Prated,c	(7)	kW	101	114	127	144	165	189
SEER	(7)(8)		3,80	3,81	3,80	3,83	3,82	3,82
Performance ηs	(7)(9)	%	149	149	149	150	150	150
EXCHANGERS								
HEAT EXCHANGER USER SIDE IN REFRIGERATION								
Water flow	(1)	l/s	4,88	5,47	6,09	6,90	7,92	9,06
Pressure drop	(1)	kPa	49,9	51,3	49,1	52,1	49,3	49,8
REFRIGERANT CIRCUIT								
Compressors nr.		N°	2	2	2	2	2	2
No. Circuits		N°	1	1	1	1	1	1
Refrigerant charge		kg	11,1	12,4	13,2	13,7	15,4	16,0
NOISE LEVEL								
Sound Pressure	(3)	dB(A)	56	56	56	57	58	58
Sound power level in cooling	(4)(5)	dB(A)	88	88	88	89	90	90
SIZE AND WEIGHT								
A	(6)	mm	2825	2825	2825	3360	3980	3980
B	(6)	mm	1195	1195	1195	1195	1195	1195
H	(6)	mm	1980	1980	1980	1980	1980	1980
Operating weight	(6)	kg	830	870	900	980	1130	1110

Notes:
1 Plant (side) cooling exchanger water (in/out) 12°C/7°C; Source (side) heat exchanger air (in) 35°C.
2 Values in compliance with EN14511-3:2013.
3 Average sound pressure level at 10m distance, unit in a free field on a reflective surface; non-binding value calculated from the sound power level.
4 Sound power on the basis of measurements made in compliance with ISO 9614.
5 Sound power level in cooling, outdoors.
6 Unit in standard configuration/execution, without optional accessories.
7 Seasonal energy efficiency of the cooling environment [REGULATION (EU) N. 2016/2281]
8 Seasonal space heating energy index
9 Seasonal energy efficiency of the space cooling
The units highlighted in this publication contain HFC R410A [GWP_{100} 2088] fluorinated greenhouse gases.
Certified data in EUROVENT

NX / LN-K			0152P	0182P	0202P	0252P	0262P	0302P	0352P
Power supply		V/ph/Hz	400/3+N/50	400/3+N/50	400/3+N/50	400/3+N/50	400/3+N/50	400/3+N/50	400/3/50
PERFORMANCE									
COOLING ONLY (GROSS VALUE)									
Cooling capacity	(1)	kW	39,3	44,3	51,7	58,8	65,5	74,7	89,9
Total power input	(1)	kW	13,6	15,8	18,5	20,4	23,2	28,3	31,1
EER	(1)	kW/kW	2,89	2,80	2,79	2,88	2,82	2,64	2,89
ESEER	(1)	kW/kW	4,50	4,44	4,41	4,38	4,39	4,22	4,26
COOLING ONLY (EN14511 VALUE)									
Cooling capacity	(1)(2)	kW	39,1	44,0	51,4	58,5	65,2	74,4	89,3
EER	(1)(2)	kW/kW	2,82	2,74	2,73	2,83	2,77	2,60	2,82
ESEER	(1)(2)	kW/kW	4,28	4,22	4,20	4,19	4,21	4,08	4,01
Cooling energy class			C	C	C	C	C	D	C
ENERGY EFFICIENCY									
SEASONAL EFFICIENCY IN COOLING (Reg. EU 2016/2281)									
Ambient refrigeration									
Prated,c	(7)	kW	39,1	44,0	51,4	58,5	65,2	74,4	89,3
SEER	(7)(8)		3,87	3,85	3,89	3,95	3,96	3,88	3,81
Performance ηs	(7)(9)	%	152	151	153	155	155	152	149
EXCHANGERS									
HEAT EXCHANGER USER SIDE IN REFRIGERATION									
Water flow	(1)	l/s	1,88	2,12	2,47	2,81	3,13	3,57	4,30
Pressure drop	(1)	kPa	36,3	34,2	36,0	33,3	33,7	31,4	55,9
REFRIGERANT CIRCUIT									
Compressors nr.		N°	2	2	2	2	2	2	2
No. Circuits		N°	1	1	1	1	1	1	1
Refrigerant charge		kg	5,80	6,00	7,10	7,30	7,80	8,80	10,5
NOISE LEVEL									
Sound Pressure	(3)	dB(A)	47	47	47	48	48	48	51
Sound power level in cooling	(4)(5)	dB(A)	79	79	79	80	80	80	83
SIZE AND WEIGHT									
A	(6)	mm	1825	1825	2395	2395	2395	2395	2825
B	(6)	mm	1195	1195	1195	1195	1195	1195	1195
H	(6)	mm	1865	1865	1865	1865	1865	1865	1980
Operating weight	(6)	kg	480	500	540	570	570	580	780

NX / LN-K			0402P	0452P	0502P	0552P	0602P	0702P
Power supply		V/ph/Hz	400/3/50	400/3/50	400/3/50	400/3/50	400/3/50	400/3/50
PERFORMANCE								
COOLING ONLY (GROSS VALUE)								
Cooling capacity	(1)	kW	99,4	113	125	140	163	179
Total power input	(1)	kW	35,9	39,3	44,2	52,9	58,1	70,3
EER	(1)	kW/kW	2,77	2,87	2,83	2,64	2,80	2,55
ESEER	(1)	kW/kW	4,11	4,29	4,33	4,36	4,20	4,10
COOLING ONLY (EN14511 VALUE)								
Cooling capacity	(1)(2)	kW	98,8	112	124	139	162	179
EER	(1)(2)	kW/kW	2,71	2,81	2,78	2,60	2,75	2,51
ESEER	(1)(2)	kW/kW	3,92	4,11	4,14	4,17	4,04	3,95
Cooling energy class			C	C	C	D	C	D
ENERGY EFFICIENCY								
SEASONAL EFFICIENCY IN COOLING (Reg. EU 2016/2281)								
Ambient refrigeration								
Prated,c	(7)	kW	98,8	112	124	139	162	179
SEER	(7)(8)		3,80	3,89	3,89	3,94	3,87	3,81
Performance ηs	(7)(9)	%	149	153	153	155	152	150
EXCHANGERS								
HEAT EXCHANGER USER SIDE IN REFRIGERATION								
Water flow	(1)	l/s	4,75	5,40	5,99	6,69	7,78	8,58
Pressure drop	(1)	kPa	47,4	49,8	47,4	49,0	47,6	44,7
REFRIGERANT CIRCUIT								
Compressors nr.		N°	2	2	2	2	2	2
No. Circuits		N°	1	1	1	1	1	1
Refrigerant charge		kg	11,1	12,7	13,6	13,7	15,4	16,0
NOISE LEVEL								
Sound Pressure	(3)	dB(A)	51	52	52	52	53	53
Sound power level in cooling	(4)(5)	dB(A)	83	84	84	84	85	85
SIZE AND WEIGHT								
A	(6)	mm	2825	3360	3360	3360	3980	3980
B	(6)	mm	1195	1195	1195	1195	1195	1195
H	(6)	mm	1980	1980	1980	1980	1980	1980
Operating weight	(6)	kg	880	1000	1030	1060	1180	1150

Notes:
1 Plant (side) cooling exchanger water (in/out) 12°C/7°C; Source (side) heat exchanger air (in) 35°C.
2 Values in compliance with EN14511-3:2013.
3 Average sound pressure level at 10m distance, unit in a free field on a reflective surface; non-binding value calculated from the sound power level.
4 Sound power on the basis of measurements made in compliance with ISO 9614.
5 Sound power level in cooling, outdoors.
6 Unit in standard configuration/execution, without optional accessories.
7 Seasonal energy efficiency of the cooling environment [REGULATION (EU) N. 2016/2281]
8 Seasonal space heating energy index
9 Seasonal energy efficiency of the space cooling
The units highlighted in this publication contain HFC R410A [GWP_{100} 2088] fluorinated greenhouse gases.
Certified data in EUROVENT

NX / SL-K			0152P	0182P	0202P	0252P	0262P	0302P
Power supply		V/ph/Hz	400/3+N/50	400/3+N/50	400/3+N/50	400/3/50	400/3/50	400/3/50
PERFORMANCE								
COOLING ONLY (GROSS VALUE)								
Cooling capacity	(1)	kW	39,4	44,6	52,3	58,9	65,9	77,7
Total power input	(1)	kW	13,9	16,1	18,2	20,3	22,9	27,4
EER	(1)	kW/kW	2,83	2,77	2,87	2,90	2,88	2,84
ESEER	(1)	kW/kW	4,28	4,25	4,49	4,15	4,22	4,30
COOLING ONLY (EN14511 VALUE)								
Cooling capacity	(1)(2)	kW	39,2	44,3	52,0	58,6	65,6	77,3
EER	(1)(2)	kW/kW	2,77	2,71	2,81	2,84	2,82	2,78
ESEER	(1)(2)	kW/kW	4,07	4,05	4,27	3,99	4,05	4,12
Cooling energy class			C	C	C	C	C	C
ENERGY EFFICIENCY								
SEASONAL EFFICIENCY IN COOLING (Reg. EU 2016/2281)								
Ambient refrigeration								
Prated,c	(7)	kW	39,2	44,3	52,0	58,6	65,6	77,3
SEER	(7)(8)		3,80	3,80	3,95	3,80	3,80	3,87
Performance ηs	(7)(9)	%	149	149	155	149	149	152
EXCHANGERS								
HEAT EXCHANGER USER SIDE IN REFRIGERATION								
Water flow	(1)	l/s	1,88	2,13	2,50	2,82	3,15	3,72
Pressure drop	(1)	kPa	36,6	34,6	36,8	33,4	34,1	34,0
REFRIGERANT CIRCUIT								
Compressors nr.		N°	2	2	2	2	2	2
No. Circuits		N°	1	1	1	1	1	1
Refrigerant charge		kg	5,90	7,00	7,10	7,60	8,50	9,30
NOISE LEVEL								
Sound Pressure	(3)	dB(A)	44	45	45	46	46	46
Sound power level in cooling	(4)(5)	dB(A)	76	77	77	78	78	78
SIZE AND WEIGHT								
A	(6)	mm	2395	2395	2395	2825	2825	2825
B	(6)	mm	1195	1195	1195	1195	1195	1195
H	(6)	mm	1865	1865	1865	1980	1980	1980
Operating weight	(6)	kg	540	550	560	670	680	680

NX / SL-K			0352P	0402P	0452P	0502P	0552P	0602P
Power supply		V/ph/Hz	400/3/50	400/3/50	400/3/50	400/3/50	400/3/50	400/3/50
PERFORMANCE								
COOLING ONLY (GROSS VALUE)								
Cooling capacity	(1)	kW	88,5	100	113	124	140	153
Total power input	(1)	kW	30,5	35,1	39,3	44,8	52,5	61,7
EER	(1)	kW/kW	2,90	2,85	2,89	2,77	2,68	2,48
ESEER	(1)	kW/kW	4,40	4,40	4,38	4,32	4,29	4,08
COOLING ONLY (EN14511 VALUE)								
Cooling capacity	(1)(2)	kW	87,9	99,4	113	124	140	152
EER	(1)(2)	kW/kW	2,83	2,79	2,82	2,72	2,63	2,44
ESEER	(1)(2)	kW/kW	4,14	4,19	4,18	4,15	4,12	3,95
Cooling energy class			C	C	C	C	D	E
ENERGY EFFICIENCY								
SEASONAL EFFICIENCY IN COOLING (Reg. EU 2016/2281)								
Ambient refrigeration								
Prated,c	(7)	kW	87,9	99,4	113	124	140	152
SEER	(7)(8)		3,88	3,92	3,95	3,89	3,89	3,81
Performance ηs	(7)(9)	%	152	154	155	153	153	149
EXCHANGERS								
HEAT EXCHANGER USER SIDE IN REFRIGERATION								
Water flow	(1)	l/s	4,23	4,78	5,42	5,95	6,72	7,32
Pressure drop	(1)	kPa	54,1	48,0	50,3	46,7	49,4	42,0
REFRIGERANT CIRCUIT								
Compressors nr.		N°	2	2	2	2	2	2
No. Circuits		N°	1	1	1	1	1	1
Refrigerant charge		kg	10,8	11,9	13,1	14,0	14,5	15,4
NOISE LEVEL								
Sound Pressure	(3)	dB(A)	47	48	49	49	50	50
Sound power level in cooling	(4)(5)	dB(A)	79	80	81	81	82	82
SIZE AND WEIGHT								
A	(6)	mm	3360	3360	3980	3980	3980	3980
B	(6)	mm	1195	1195	1195	1195	1195	1195
H	(6)	mm	1980	1980	1980	1980	1980	1980
Operating weight	(6)	kg	860	960	1070	1080	1110	1180

Notes:
1 Plant (side) cooling exchanger water (in/out) 12°C/7°C; Source (side) heat exchanger air (in) 35°C.
2 Values in compliance with EN14511-3:2013.
3 Average sound pressure level at 10m distance, unit in a free field on a reflective surface; non-binding value calculated from the sound power level.
4 Sound power on the basis of measurements made in compliance with ISO 9614.
5 Sound power level in cooling, outdoors.
6 Unit in standard configuration/execution, without optional accessories.
7 Seasonal energy efficiency of the cooling environment [REGULATION (EU) N. 2016/2281]
8 Seasonal space heating energy index
9 Seasonal energy efficiency of the space cooling
The units highlighted in this publication contain HFC R410A [GWP_{100} 2088] fluorinated greenhouse gases.
Certified data in EUROVENT

NX / CA			0152P	0182P	0202P	0252P	0262P	0302P	0352P
Power supply		V/ph/Hz	400/3+N/50	400/3+N/50	400/3+N/50	400/3+N/50	400/3+N/50	400/3/50	400/3/50
PERFORMANCE									
COOLING ONLY (GROSS VALUE)									
Cooling capacity	(1)	kW	41,7	47,4	55,0	62,5	69,6	85,0	96,6
Total power input	(1)	kW	12,8	14,5	16,7	19,3	21,8	26,5	30,2
EER	(1)	kW/kW	3,26	3,27	3,29	3,24	3,19	3,21	3,20
ESEER	(1)	kW/kW	4,56	4,65	4,45	4,45	4,49	4,28	4,41
COOLING ONLY (EN14511 VALUE)									
Cooling capacity	(1)(2)	kW	41,4	47,1	54,7	62,2	69,2	84,5	95,9
EER	(1)(2)	kW/kW	3,17	3,18	3,21	3,16	3,12	3,14	3,11
ESEER	(1)(2)	kW/kW	4,30	4,41	4,23	4,26	4,28	4,07	4,13
Cooling energy class			A	A	A	A	A	A	A
ENERGY EFFICIENCY									
SEASONAL EFFICIENCY IN COOLING (Reg. EU 2016/2281)									
Ambient refrigeration									
Prated,c	(7)	kW	41,4	47,1	54,7	62,2	69,2	84,5	95,9
SEER	(7)(8)		3,92	4,05	3,95	4,02	4,06	3,88	3,90
Performance ηs	(7)(9)	%	154	159	155	158	159	152	153
EXCHANGERS									
HEAT EXCHANGER USER SIDE IN REFRIGERATION									
Water flow	(1)	l/s	1,99	2,27	2,63	2,99	3,33	4,07	4,62
Pressure drop	(1)	kPa	40,9	39,1	40,7	37,6	38,0	40,7	64,4
REFRIGERANT CIRCUIT									
Compressors nr.		N°	2	2	2	2	2	2	2
No. Circuits		N°	1	1	1	1	1	1	1
Refrigerant charge		kg	6,30	7,90	8,00	8,10	8,70	10,0	12,0
NOISE LEVEL									
Sound Pressure	(3)	dB(A)	52	52	53	53	54	56	56
Sound power level in cooling	(4)(5)	dB(A)	84	84	85	85	86	88	88
SIZE AND WEIGHT									
A	(6)	mm	1825	2395	2395	2395	2395	2825	3360
B	(6)	mm	1195	1195	1195	1195	1195	1195	1195
H	(6)	mm	1865	1865	1865	1865	1865	1980	1980
Operating weight	(6)	kg	480	540	550	560	570	680	830

NX / CA			0402P	0452P	0502P	0562P	0612P	0712P	0812P
Power supply		V/ph/Hz	400/3/50	400/3/50	400/3/50	400/3/50	400/3/50	400/3/50	400/3/50
PERFORMANCE									
COOLING ONLY (GROSS VALUE)									
Cooling capacity	(1)	kW	108	122	138	160	178	201	227
Total power input	(1)	kW	33,6	38,3	42,6	48,9	55,4	63,5	70,5
EER	(1)	kW/kW	3,21	3,18	3,23	3,28	3,22	3,17	3,22
ESEER	(1)	kW/kW	4,43	4,54	4,34	4,32	4,31	4,38	4,17
COOLING ONLY (EN14511 VALUE)									
Cooling capacity	(1)(2)	kW	107	121	137	159	178	200	226
EER	(1)(2)	kW/kW	3,13	3,10	3,16	3,20	3,15	3,10	3,14
ESEER	(1)(2)	kW/kW	4,19	4,30	4,13	4,08	4,13	4,18	3,96
Cooling energy class			A	A	A	A	A	A	A
ENERGY EFFICIENCY									
SEASONAL EFFICIENCY IN COOLING (Reg. EU 2016/2281)									
Ambient refrigeration									
Prated,c	(7)	kW	107	121	137	159	178	200	226
SEER	(7)(8)		3,96	4,08	3,94	3,94	3,99	4,08	3,88
Performance ηs	(7)(9)	%	156	160	155	155	157	160	152
EXCHANGERS									
HEAT EXCHANGER USER SIDE IN REFRIGERATION									
Water flow	(1)	l/s	5,16	5,83	6,59	7,67	8,53	9,62	10,86
Pressure drop	(1)	kPa	56,0	58,2	57,4	64,4	57,2	56,2	71,5
REFRIGERANT CIRCUIT									
Compressors nr.		N°	2	2	2	2	2	2	2
No. Circuits		N°	1	1	1	1	1	1	1
Refrigerant charge		kg	13,3	14,3	15,3	18,8	20,3	23,0	24,5
NOISE LEVEL									
Sound Pressure	(3)	dB(A)	58	58	58	59	59	60	61
Sound power level in cooling	(4)(5)	dB(A)	90	90	90	91	91	92	93
SIZE AND WEIGHT									
A	(6)	mm	3360	3360	3980	3160	3160	3160	4335
B	(6)	mm	1195	1195	1195	2250	2250	2250	2250
H	(6)	mm	1980	1980	1980	2170	2170	2170	2170
Operating weight	(6)	kg	960	1000	1080	1510	1550	1570	1810

Notes:
1 Plant (side) cooling exchanger water (in/out) 12°C/7°C; Source (side) heat exchanger air (in) 35°C.
2 Values in compliance with EN14511-3:2013.
3 Average sound pressure level at 10m distance, unit in a free field on a reflective surface; non-binding value calculated from the sound power level.
4 Sound power on the basis of measurements made in compliance with ISO 9614.
5 Sound power level in cooling, outdoors.
6 Unit in standard configuration/execution, without optional accessories.
7 Seasonal energy efficiency of the cooling environment [REGULATION (EU) N. 2016/2281]
8 Seasonal space heating energy index
9 Seasonal energy efficiency of the space cooling
The units highlighted in this publication contain HFC R410A [GWP_{100} 2088] fluorinated greenhouse gases.
Certified data in EUROVENT

NX / LN-CA			0152P	0182P	0202P	0252P	0262P	0302P	0352P
Power supply		V/ph/Hz	400/3+N/50	400/3+N/50	400/3+N/50	400/3/50	400/3/50	400/3/50	400/3/50
PERFORMANCE									
COOLING ONLY (GROSS VALUE)									
Cooling capacity	(1)	kW	41,5	47,0	55,0	63,5	70,7	82,7	94,4
Total power input	(1)	kW	12,6	14,4	17,2	19,5	21,9	26,0	29,3
EER	(1)	kW/kW	3,29	3,26	3,20	3,26	3,23	3,18	3,22
ESEER	(1)	kW/kW	4,56	4,62	4,71	4,31	4,34	4,37	4,52
COOLING ONLY (EN14511 VALUE)									
Cooling capacity	(1)(2)	kW	41,2	46,7	54,7	63,1	70,3	82,3	93,8
EER	(1)(2)	kW/kW	3,20	3,18	3,12	3,18	3,15	3,11	3,13
ESEER	(1)(2)	kW/kW	4,29	4,38	4,46	4,11	4,15	4,20	4,25
Cooling energy class			A	A	A	A	A	A	A
ENERGY EFFICIENCY									
SEASONAL EFFICIENCY IN COOLING (Reg. EU 2016/2281)									
Ambient refrigeration									
Prated,c	(7)	kW	41,2	46,7	54,7	63,1	70,3	82,3	93,8
SEER	(7)(8)		3,91	3,89	4,01	3,81	3,84	3,91	3,98
Performance ηs	(7)(9)	%	153	153	158	149	151	153	156
EXCHANGERS									
HEAT EXCHANGER USER SIDE IN REFRIGERATION									
Water flow	(1)	l/s	1,98	2,25	2,63	3,04	3,38	3,95	4,52
Pressure drop	(1)	kPa	40,5	38,4	40,7	38,8	39,2	38,5	61,6
REFRIGERANT CIRCUIT									
Compressors nr.		N°	2	2	2	2	2	2	2
No. Circuits		N°	1	1	1	1	1	1	1
Refrigerant charge		kg	6,70	7,90	8,00	8,50	9,60	10,5	12,0
NOISE LEVEL									
Sound Pressure	(3)	dB(A)	48	48	48	49	49	50	52
Sound power level in cooling	(4)(5)	dB(A)	80	80	80	81	81	82	84
SIZE AND WEIGHT									
A	(6)	mm	2395	2395	2395	2825	2825	3360	3360
B	(6)	mm	1195	1195	1195	1195	1195	1195	1195
H	(6)	mm	1865	1865	1865	1980	1980	1980	1980
Operating weight	(6)	kg	550	560	560	670	680	750	870

NX / LN-CA			0402P	0452P	0502P	0562P	0612P	0712P	0812P
Power supply		V/ph/Hz	400/3/50	400/3/50	400/3/50	400/3/50	400/3/50	400/3/50	400/3/50
PERFORMANCE									
COOLING ONLY (GROSS VALUE)									
Cooling capacity	(1)	kW	107	121	134	154	173	198	221
Total power input	(1)	kW	33,3	37,9	42,2	47,1	54,4	60,8	67,5
EER	(1)	kW/kW	3,23	3,18	3,18	3,27	3,18	3,26	3,28
ESEER	(1)	kW/kW	4,32	4,41	4,36	4,67	4,48	4,65	4,38
COOLING ONLY (EN14511 VALUE)									
Cooling capacity	(1)(2)	kW	107	120	133	153	172	197	220
EER	(1)(2)	kW/kW	3,14	3,10	3,11	3,19	3,11	3,20	3,20
ESEER	(1)(2)	kW/kW	4,10	4,19	4,15	4,40	4,29	4,43	4,16
Cooling energy class			A	A	A	A	A	A	A
ENERGY EFFICIENCY									
SEASONAL EFFICIENCY IN COOLING (Reg. EU 2016/2281)									
Ambient refrigeration									
Prated,c	(7)	kW	107	120	133	153	172	197	220
SEER	(7)(8)		3,85	3,96	3,95	4,19	4,09	4,28	4,05
Performance ηs	(7)(9)	%	151	155	155	165	161	168	159
EXCHANGERS									
HEAT EXCHANGER USER SIDE IN REFRIGERATION									
Water flow	(1)	l/s	5,14	5,77	6,42	7,36	8,26	9,49	10,58
Pressure drop	(1)	kPa	55,4	56,9	54,4	59,3	53,6	54,6	67,9
REFRIGERANT CIRCUIT									
Compressors nr.		N°	2	2	2	2	2	2	2
No. Circuits		N°	1	1	1	1	1	1	1
Refrigerant charge		kg	13,5	14,5	15,3	18,8	20,3	24,3	25,8
NOISE LEVEL									
Sound Pressure	(3)	dB(A)	52	52	53	54	54	55	56
Sound power level in cooling	(4)(5)	dB(A)	84	84	85	86	86	87	88
SIZE AND WEIGHT									
A	(6)	mm	3980	3980	3980	3160	3160	4335	4335
B	(6)	mm	1195	1195	1195	2250	2250	2250	2250
H	(6)	mm	1980	1980	1980	2170	2170	2170	2170
Operating weight	(6)	kg	1050	1080	1090	1510	1550	1810	1870

Notes:
1 Plant (side) cooling exchanger water (in/out) 12°C/7°C; Source (side) heat exchanger air (in) 35°C.
2 Values in compliance with EN14511-3:2013.
3 Average sound pressure level at 10m distance, unit in a free field on a reflective surface; non-binding value calculated from the sound power level.
4 Sound power on the basis of measurements made in compliance with ISO 9614.
5 Sound power level in cooling, outdoors.
6 Unit in standard configuration/execution, without optional accessories.
7 Seasonal energy efficiency of the cooling environment [REGULATION (EU) N. 2016/2281]
8 Seasonal space heating energy index
9 Seasonal energy efficiency of the space cooling
The units highlighted in this publication contain HFC R410A [GWP_{100} 2088] fluorinated greenhouse gases.
Certified data in EUROVENT

NX / SL-CA			0182P	0202P	0252P	0262P	0302P	0352P	0412P
Power supply		V/ph/Hz	400/3/50	400/3/50	400/3/50	400/3/50	400/3/50	400/3/50	400/3/50
PERFORMANCE									
COOLING ONLY (GROSS VALUE)									
Cooling capacity	(1)	kW	47,5	55,3	62,2	69,2	81,9	94,5	106
Total power input	(1)	kW	14,5	17,1	19,0	21,4	25,5	29,6	32,4
EER	(1)	kW/kW	3,28	3,23	3,27	3,23	3,21	3,19	3,27
ESEER	(1)	kW/kW	4,39	4,52	4,44	4,46	4,57	4,52	4,56
COOLING ONLY (EN14511 VALUE)									
Cooling capacity	(1)(2)	kW	47,2	55,0	61,9	68,8	81,5	93,9	105
EER	(1)(2)	kW/kW	3,19	3,15	3,20	3,16	3,14	3,10	3,19
ESEER	(1)(2)	kW/kW	4,16	4,30	4,24	4,26	4,38	4,27	4,35
Cooling energy class			A	A	A	A	A	A	A
ENERGY EFFICIENCY									
SEASONAL EFFICIENCY IN COOLING (Reg. EU 2016/2281)									
Ambient refrigeration									
Prated,c	(7)	kW	47,2	55,0	61,9	68,8	81,5	93,9	105
SEER	(7)(8)		3,80	3,90	3,90	3,96	4,11	4,03	4,10
Performance ηs	(7)(9)	%	149	153	153	155	161	158	161
EXCHANGERS									
HEAT EXCHANGER USER SIDE IN REFRIGERATION									
Water flow	(1)	l/s	2,27	2,65	2,97	3,31	3,92	4,52	5,07
Pressure drop	(1)	kPa	39,3	41,2	37,3	37,6	37,8	61,7	54,0
REFRIGERANT CIRCUIT									
Compressors nr.		N°	2	2	2	2	2	2	2
No. Circuits		N°	1	1	1	1	1	1	1
Refrigerant charge		kg	8,30	8,40	8,90	10,1	10,5	12,2	14,1
NOISE LEVEL									
Sound Pressure	(3)	dB(A)	46	46	47	47	47	48	49
Sound power level in cooling	(4)(5)	dB(A)	78	78	79	79	79	80	81
SIZE AND WEIGHT									
A	(6)	mm	2825	2825	3360	3360	3360	3980	3160
B	(6)	mm	1195	1195	1195	1195	1195	1195	2250
H	(6)	mm	1980	1980	1980	1980	1980	1980	2170
Operating weight	(6)	kg	660	670	760	770	780	940	1410

NX / SL-CA			0462P	0512P	0562P	0612P	0712P	0812P
Power supply		V/ph/Hz	400/3/50	400/3/50	400/3/50	400/3/50	400/3/50	400/3/50
PERFORMANCE								
COOLING ONLY (GROSS VALUE)								
Cooling capacity	(1)	kW	119	133	152	172	195	218
Total power input	(1)	kW	36,9	41,9	47,3	52,8	61,6	68,2
EER	(1)	kW/kW	3,22	3,17	3,21	3,26	3,16	3,19
ESEER	(1)	kW/kW	4,64	4,67	4,70	4,63	4,72	4,46
COOLING ONLY (EN14511 VALUE)								
Cooling capacity	(1)(2)	kW	118	132	151	171	194	216
EER	(1)(2)	kW/kW	3,14	3,10	3,13	3,19	3,10	3,12
ESEER	(1)(2)	kW/kW	4,39	4,46	4,47	4,42	4,51	4,26
Cooling energy class			A	A	A	A	A	A
ENERGY EFFICIENCY								
SEASONAL EFFICIENCY IN COOLING (Reg. EU 2016/2281)								
Ambient refrigeration								
Prated,c	(7)	kW	118	132	151	171	194	216
SEER	(7)(8)		4,15	4,19	4,25	4,24	4,35	4,14
Performance ηs	(7)(9)	%	163	165	167	167	171	162
EXCHANGERS								
HEAT EXCHANGER USER SIDE IN REFRIGERATION								
Water flow	(1)	l/s	5,67	6,36	7,25	8,24	9,32	10,40
Pressure drop	(1)	kPa	55,1	53,5	57,6	53,3	52,7	65,7
REFRIGERANT CIRCUIT								
Compressors nr.		N°	2	2	2	2	2	2
No. Circuits		N°	1	1	1	1	1	1
Refrigerant charge		kg	15,0	18,5	20,1	22,7	25,6	27,1
NOISE LEVEL								
Sound Pressure	(3)	dB(A)	50	50	51	52	53	54
Sound power level in cooling	(4)(5)	dB(A)	82	82	83	84	85	86
SIZE AND WEIGHT								
A	(6)	mm	3160	3160	4335	4335	4335	5510
B	(6)	mm	2250	2250	2250	2250	2250	2250
H	(6)	mm	2170	2170	2170	2170	2170	2170
Operating weight	(6)	kg	1450	1480	1740	1820	1850	2130

Notes:
1 Plant (side) cooling exchanger water (in/out) 12°C/7°C; Source (side) heat exchanger air (in) 35°C.
2 Values in compliance with EN14511-3:2013.
3 Average sound pressure level at 10m distance, unit in a free field on a reflective surface; non-binding value calculated from the sound power level.
4 Sound power on the basis of measurements made in compliance with ISO 9614.
5 Sound power level in cooling, outdoors.
6 Unit in standard configuration/execution, without optional accessories.
7 Seasonal energy efficiency of the cooling environment [REGULATION (EU) N. 2016/2281]
8 Seasonal space heating energy index
9 Seasonal energy efficiency of the space cooling
The units highlighted in this publication contain HFC R410A [GWP_{100} 2088] fluorinated greenhouse gases.
Certified data in EUROVENT

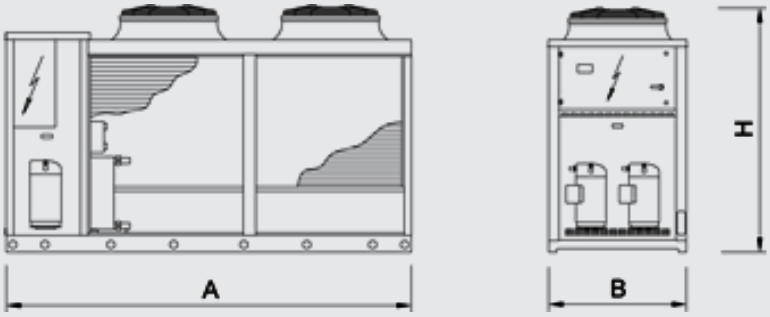
A
B
H

CHILLERS

NX 0614P - 1214P

Chiller, air source for outdoor installation
159-327 kW



Outdoor unit for the production of chilled water with hermetic rotary Scroll compressors, ozone-friendly refrigerant R410A, axial-flow fans, braze-welded plate-type heat exchanger, micro-channel full-aluminum air coils and thermostatic expansion valve. The range is composed by units equipped with four compressors in tandem configuration on two independent refrigeration circuits.

Version

K	Key efficiency, compact version
LN-K	Low Noise, Key efficiency and compact version
SL-K	Super Low noise, Key efficiency and compact version

Configurations

-	Basic function
D	Partial condensing heat recovery function

Features

MAXIMUM COMPACTNESS

This new range is available in the K version, that integrates the maximum compactness with a qualifying unit's efficiency. This allow to achieve a very high flexibility in the design process as well as during the on-site installation operations, offering a premium solution in case of reduced clearances or when retrofitting existing installations.

ALUMINIUM MICRO-CHANNEL HEAT EXCHANGERS

The full aluminium micro-channel condenser coils deliver high efficiency whilst ensuring a reduced refrigerant volume and a lower unit weight. The e-coating protection (optional) grants the highest level of resistance to corrosion in any condition, even in the most aggressive environments.

WIDE OPERATING RANGE

Full load operation is ensured with outdoor air temperature up to 46°C, partial load operation is possible up to or even beyond 50°C. The unit can produce chilled water at negative temperature (down to -10°C of leaving water temperature). Dedicated accessories allow the unit operation down to -20°C of outdoor air temperature.

INTEGRATED HYDRONIC GROUP

The optional built-in hydronic module already contains the main water circuit components; it is available with single or twin in-line, for achieving both low or high head.

Accessory

- Microchannel coils with e-coating protection
- Traditional coils with copper tubes and alluminium fins, also available with prepainted fins or Fin Guard Silver protective treatment.
- Copper-Copper heat exchanger coils
- Electronic expansion valve
- Compressor power factor correction
- Soft start
- Compressor suction and discharge valves
- High and low pressure gauges
- DVVF and DVV2F devices for low air temperature operation
- Hydronic group with possible storage tank
- Anti-intrusion grills

Controls

Electronic control W3000TE

The W3000TE controller offers advanced functions and algorithms.

The Compact keypad features an easy-to-use interface and a complete LCD display that allows consulting and intervening on the unit by means of a multi-language menu (19 languages are available).

The regulation is based on the patented "Quickmind" water temperature regulation logic uses self-adapting control to maintain flow temperatures and optimise performance even in low water content scenarios. As an alternative, the proportional or proportional-integral regulations are also available.

The diagnostics comprises a complete alarm management system, with the "black-box" (via PC) and the alarm history display (via display or also PC) for enhanced analysis of the unit operation

Optional proprietary devices can perform the adjustment of the resources in systems made of several units. Consumption metering and performance measurement are possible as well.

Supervision can be easily developed via proprietary devices or the integration in third party systems by means of the most common protocols as ModBus, Bacnet, Bacnet-over-IP, LonWorks.

Compatibility with the remote keyboard (up to 8 units).

The programmable timer manages a weekly schedule organised into time bands to optimise unit performance by minimising power consumption during periods of inactivity. Up to 10 daily time bands can be associated with different operating set points.

The defrosting (air source reversible unit only) follows a proprietary self-adaptive logic, which features the monitoring of several operational parameters. This allows to reduce the number and duration of the defrost cycles, with a benefit for the overall energy efficiency.



NX / K			0614P	0714P	0814P	0914P	1014P	1114P	1214P
Power supply		V/ph/Hz	400/3/50	400/3/50	400/3/50	400/3/50	400/3/50	400/3/50	400/3/50
PERFORMANCE									
COOLING ONLY (GROSS VALUE)									
Cooling capacity	(1)	kW	165	194	218	248	289	308	327
Total power input	(1)	kW	58,3	66,7	78,9	88,6	99,0	108	118
EER	(1)	kW/kW	2,83	2,91	2,76	2,80	2,92	2,85	2,76
ESEER	(1)	kW/kW	4,06	4,39	4,30	4,41	4,26	4,27	4,18
COOLING ONLY (EN14511 VALUE)									
Cooling capacity	(1)(2)	kW	164	193	217	247	288	307	325
EER	(1)(2)	kW/kW	2,78	2,86	2,72	2,76	2,87	2,80	2,72
ESEER	(1)(2)	kW/kW	3,85	4,16	4,08	4,18	4,05	4,08	3,99
Cooling energy class			C	C	C	C	C	C	C
ENERGY EFFICIENCY									
SEASONAL EFFICIENCY IN COOLING (Reg. EU 2016/2281)									
Ambient refrigeration									
Prated,c	(7)	kW	164	193	217	247	288	307	325
SEER	(7)(8)		3,81	4,05	3,95	4,06	4,01	4,01	3,88
Performance ηs	(7)(9)	%	149	159	155	159	157	157	152
EXCHANGERS									
HEAT EXCHANGER USER SIDE IN REFRIGERATION									
Water flow	(1)	l/s	7,87	9,28	10,41	11,87	13,83	14,75	15,62
Pressure drop	(1)	kPa	45,0	47,1	47,8	50,4	54,8	46,8	52,5
REFRIGERANT CIRCUIT									
Compressors nr.		N°	4	4	4	4	4	4	4
No. Circuits		N°	2	2	2	2	2	2	2
Refrigerant charge		kg	17,0	18,4	19,6	21,6	26,8	29,0	29,0
NOISE LEVEL									
Sound Pressure	(3)	dB(A)	60	60	61	62	63	63	63
Sound power level in cooling	(4)(5)	dB(A)	92	92	93	94	95	95	95
SIZE AND WEIGHT									
A	(6)	mm	3160	3160	3160	3160	4335	4335	4335
B	(6)	mm	2250	2250	2250	2250	2250	2250	2250
H	(6)	mm	2170	2170	2170	2170	2170	2170	2170
Operating weight	(6)	kg	1510	1680	1690	1830	2250	2300	2330

Notes:
1 Plant (side) cooling exchanger water (in/out) 12°C/7°C; Source (side) heat exchanger air (in) 35°C.
2 Values in compliance with EN14511-3:2013.
3 Average sound pressure level at 10m distance, unit in a free field on a reflective surface; non-binding value calculated from the sound power level.
4 Sound power on the basis of measurements made in compliance with ISO 9614.
5 Sound power level in cooling, outdoors.
6 Unit in standard configuration/execution, without optional accessories.
7 Seasonal energy efficiency of the cooling environment [REGULATION (EU) N. 2016/2281]
8 Seasonal space heating energy index
9 Seasonal energy efficiency of the space cooling
The units highlighted in this publication contain HFC R410A [GWP_{100} 2088] fluorinated greenhouse gases.
Certified data in EUROVENT

NX / LN-K			0614P	0714P	0814P	0914P	1014P	1114P	1214P
Power supply		V/ph/Hz	400/3/50	400/3/50	400/3/50	400/3/50	400/3/50	400/3/50	400/3/50
PERFORMANCE									
COOLING ONLY (GROSS VALUE)									
Cooling capacity	(1)	kW	160	185	208	235	274	290	320
Total power input	(1)	kW	58,1	68,6	79,6	92,2	101	112	118
EER	(1)	kW/kW	2,75	2,70	2,62	2,55	2,71	2,60	2,70
ESEER	(1)	kW/kW	4,13	4,42	4,37	4,41	4,25	4,25	4,37
COOLING ONLY (EN14511 VALUE)									
Cooling capacity	(1)(2)	kW	159	185	207	234	273	289	319
EER	(1)(2)	kW/kW	2,70	2,66	2,58	2,51	2,67	2,57	2,66
ESEER	(1)(2)	kW/kW	3,94	4,19	4,16	4,19	4,05	4,06	4,16
Cooling energy class			C	D	D	D	D	D	D
ENERGY EFFICIENCY									
SEASONAL EFFICIENCY IN COOLING (Reg. EU 2016/2281)									
Ambient refrigeration									
Prated,c	(7)	kW	159	185	207	234	273	289	319
SEER	(7)(8)		3,80	4,05	4,01	4,04	3,99	3,97	4,03
Performance ηs	(7)(9)	%	149	159	158	158	157	156	158
EXCHANGERS									
HEAT EXCHANGER USER SIDE IN REFRIGERATION									
Water flow	(1)	l/s	7,64	8,87	9,96	11,24	13,10	13,89	15,32
Pressure drop	(1)	kPa	42,4	43,0	43,7	45,2	49,2	41,5	50,5
REFRIGERANT CIRCUIT									
Compressors nr.		N°	4	4	4	4	4	4	4
No. Circuits		N°	2	2	2	2	2	2	2
Refrigerant charge		kg	17,0	18,4	19,6	21,6	26,8	29,0	29,0
NOISE LEVEL									
Sound Pressure	(3)	dB(A)	54	54	55	56	57	57	58
Sound power level in cooling	(4)(5)	dB(A)	86	86	87	88	89	89	90
SIZE AND WEIGHT									
A	(6)	mm	3160	3160	3160	3160	4335	4335	4335
B	(6)	mm	2250	2250	2250	2250	2250	2250	2250
H	(6)	mm	2170	2170	2170	2170	2170	2170	2170
Operating weight	(6)	kg	1550	1730	1740	1870	2300	2350	2370

Notes:
1 Plant (side) cooling exchanger water (in/out) 12°C/7°C; Source (side) heat exchanger air (in) 35°C.
2 Values in compliance with EN14511-3:2013.
3 Average sound pressure level at 10m distance, unit in a free field on a reflective surface; non-binding value calculated from the sound power level.
4 Sound power on the basis of measurements made in compliance with ISO 9614.
5 Sound power level in cooling, outdoors.
6 Unit in standard configuration/execution, without optional accessories.
7 Seasonal energy efficiency of the cooling environment [REGULATION (EU) N. 2016/2281]
8 Seasonal space heating energy index
9 Seasonal energy efficiency of the space cooling
The units highlighted in this publication contain HFC R410A [GWP_{100} 2088] fluorinated greenhouse gases.
Certified data in EUROVENT

NX / SL-K			0614P	0714P	0814P	0914P	1014P	1114P	1214P
Power supply		V/ph/Hz	400/3/50	400/3/50	400/3/50	400/3/50	400/3/50	400/3/50	400/3/50
PERFORMANCE									
COOLING ONLY (GROSS VALUE)									
Cooling capacity	(1)	kW	159	180	214	241	264	296	312
Total power input	(1)	kW	56,3	70,7	77,8	89,3	104	109	120
EER	(1)	kW/kW	2,82	2,54	2,75	2,70	2,55	2,71	2,61
ESEER	(1)	kW/kW	4,34	4,41	4,40	4,41	4,28	4,34	4,26
COOLING ONLY (EN14511 VALUE)									
Cooling capacity	(1)(2)	kW	158	179	213	240	263	295	311
EER	(1)(2)	kW/kW	2,78	2,51	2,71	2,66	2,51	2,68	2,57
ESEER	(1)(2)	kW/kW	4,13	4,21	4,19	4,20	4,09	4,15	4,07
Cooling energy class			C	D	C	D	D	D	D
ENERGY EFFICIENCY									
SEASONAL EFFICIENCY IN COOLING (Reg. EU 2016/2281)									
Ambient refrigeration									
Prated,c	(7)	kW	158	179	213	240	263	295	311
SEER	(7)(8)		3,92	4,03	4,04	4,07	3,99	4,03	3,91
Performance ηs	(7)(9)	%	154	158	159	160	157	158	153
EXCHANGERS									
HEAT EXCHANGER USER SIDE IN REFRIGERATION									
Water flow	(1)	l/s	7,60	8,60	10,25	11,54	12,63	14,16	14,93
Pressure drop	(1)	kPa	41,9	40,5	46,3	47,6	45,7	43,1	48,0
REFRIGERANT CIRCUIT									
Compressors nr.		N°	4	4	4	4	4	4	4
No. Circuits		N°	2	2	2	2	2	2	2
Refrigerant charge		kg	17,0	18,4	25,2	27,2	26,8	34,6	34,6
NOISE LEVEL									
Sound Pressure	(3)	dB(A)	50	51	51	52	52	54	54
Sound power level in cooling	(4)(5)	dB(A)	82	83	83	84	84	86	86
SIZE AND WEIGHT									
A	(6)	mm	3160	3160	4335	4335	4335	5510	5510
B	(6)	mm	2250	2250	2250	2250	2250	2250	2250
H	(6)	mm	2170	2170	2170	2170	2170	2170	2170
Operating weight	(6)	kg	1550	1730	2030	2170	2300	2700	2730

Notes:
1 Plant (side) cooling exchanger water (in/out) 12°C/7°C; Source (side) heat exchanger air (in) 35°C.
2 Values in compliance with EN14511-3:2013.
3 Average sound pressure level at 10m distance, unit in a free field on a reflective surface; non-binding value calculated from the sound power level.
4 Sound power on the basis of measurements made in compliance with ISO 9614.
5 Sound power level in cooling, outdoors.
6 Unit in standard configuration/execution, without optional accessories.
7 Seasonal energy efficiency of the cooling environment [REGULATION (EU) N. 2016/2281]
8 Seasonal space heating energy index
9 Seasonal energy efficiency of the space cooling
The units highlighted in this publication contain HFC R410A [GWP_{100} 2088] fluorinated greenhouse gases.
Certified data in EUROVENT

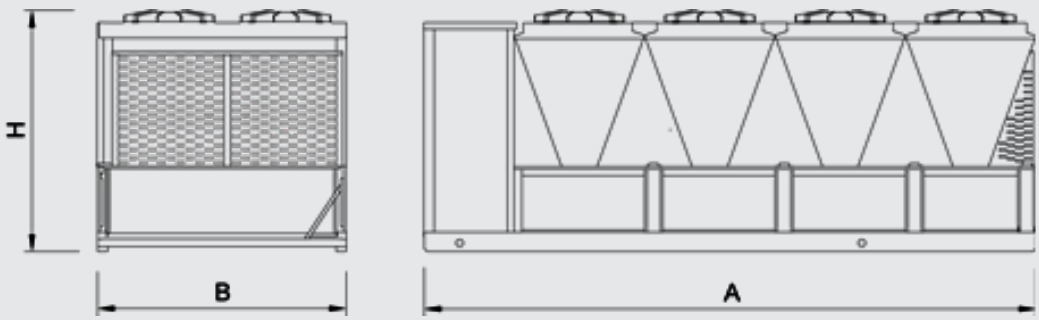

CHILLERS

NX 0614T - 1214T

Chiller, air source for outdoor installation
159-352 kW



Outdoor unit for the production of chilled water with hermetic rotary Scroll compressors, ozone-friendly refrigerant R410A, axial-flow fans, shell and tubes heat exchanger, micro-channel full-aluminum air coils and thermostatic or electronic expansion valve, according to the model. The range is composed by units equipped with four compressors in tandem configuration on two independent refrigeration circuits.

Version

K	Key efficiency, compact version
LN-K	Low Noise, Key efficiency and compact version
SL-K	Super Low noise, Key efficiency and compact version
CA	Class A of efficiency
LN-CA	Low Noise, Class A of efficiency
SL-CA	Super Low noise version, Class A of efficiency

Configurations

-	Basic function
D	Partial condensing heat recovery function

Features

CLASS A EFFICIENCY

The full range is available with the Class A efficiency rating. Thanks to the generous sizing of the heat exchangers and an accurate control of the fan speed, the CA versions grant a premium level efficiency in every noise configuration.

ALUMINIUM MICRO-CHANNEL HEAT EXCHANGERS

The full aluminium micro-channel condenser coils deliver high efficiency whilst ensuring a reduced refrigerant volume and a lower unit weight. The e-coating protection (optional) grants the highest level of resistance to corrosion in any condition, even in the most aggressive environments.

ELECTRONIC EXPANSION VALVE SUPPLIED STANDARD

The use of the electronic expansion valve generates considerable benefits, especially in cases of variable demand and different external conditions. It has been introduced into these units as a result of accurate design choices concerning the cooling circuit and the optimisation of operation in various different working conditions. The electronic expansion valve comes standard in the high-efficieny CA version, optional for the compact K versions.

WIDE OPERATING RANGE

Full load operation is ensured with outdoor air temperature up to 46°C, partial load operation is possible up to or even beyond 50°C. The unit can produce chilled water at negative temperature (down to -10°C of leaving water temperature). Dedicated accessories allow the unit operation down to -20°C of outdoor air temperature.

EXCHANGER

The shell and tube exchanger allows to achieve the highest flexibility on the unit's installation, keeping on the hydronic side the pressure drops at the minimum level, thus representing the best choice for all the hydronic applications on the residential, commercial and industrial markets.

INTEGRATED HYDRONIC GROUP

The optional built-in hydronic module already contains the main water circuit components; it is available with single or twin in-line, for achieving both low or high head.

Accessory

- Microchannel coils with e-coating protection
- Traditional coils with copper tubes and alluminium fins, also available with prepainted fins or Fin Guard Silver protective treatment.
- Copper-Copper heat exchanger coils
- Compressor power factor correction
- Soft start
- Compressor suction and discharge valves
- High and low pressure gauges
- DVVF and DVV2F devices for low air temperature operation
- Hydronic group with possible storage tank
- Anti-intrusion grills

Controls

Electronic control W3000TE

The W3000TE controller offers advanced functions and algorithms.

The Compact keypad features an easy-to-use interface and a complete LCD display that allows consulting and intervening on the unit by means of a multi-language menu (19 languages are available).

The regulation is based on the patented "Quickmind" water temperature regulation logic uses self-adapting control to maintain flow temperatures and optimise performance even in low water content scenarios. As an alternative, the proportional or proportional-integral regulations are also available.

The diagnostics comprises a complete alarm management system, with the "black-box" (via PC) and the alarm history display (via display or also PC) for enhanced analysis of the unit operation

Optional proprietary devices can perform the adjustment of the resources in systems made of several units. Consumption metering and performance measurement are possible as well.

Supervision can be easily developed via proprietary devices or the integration in third party systems by means of the most common protocols as ModBus, Bacnet, Bacnet-over-IP, LonWorks.

Compatibility with the remote keyboard (up to 8 units).

The programmable timer manages a weekly schedule organised into time bands to optimise unit performance by minimising power consumption during periods of inactivity. Up to 10 daily time bands can be associated with different operating set points.

The defrosting (air source reversible unit only) follows a proprietary self-adaptive logic, which features the monitoring of several operational parameters. This allows to reduce the number and duration of the defrost cycles, with a benefit for the overall energy efficiency.



NX / K			0614T	0714T	0814T	0914T	1014T	1114T	1214T
Power supply		V/ph/Hz	400/3/50	400/3/50	400/3/50	400/3/50	400/3/50	400/3/50	400/3/50
PERFORMANCE									
COOLING ONLY (GROSS VALUE)									
Cooling capacity	(1)	kW	165	194	218	248	289	308	327
Total power input	(1)	kW	58,3	66,7	78,9	88,6	99,0	108	118
EER	(1)	kW/kW	2,83	2,91	2,76	2,80	2,92	2,85	2,76
ESEER	(1)	kW/kW	4,06	4,39	4,30	4,41	4,26	4,27	4,18
COOLING ONLY (EN14511 VALUE)									
Cooling capacity	(1)(2)	kW	164	193	217	247	288	307	326
EER	(1)(2)	kW/kW	2,79	2,87	2,71	2,76	2,86	2,81	2,73
ESEER	(1)(2)	kW/kW	3,92	4,21	4,08	4,20	4,02	4,11	4,02
Cooling energy class			C	C	C	C	C	C	C
ENERGY EFFICIENCY									
SEASONAL EFFICIENCY IN COOLING (Reg. EU 2016/2281)									
Ambient refrigeration									
Prated,c	(7)	kW	164	193	217	247	288	307	326
SEER	(7)(8)		3,81	4,11	3,95	4,10	3,97	4,05	3,91
Performance ηs	(7)(9)	%	150	161	155	161	156	159	153
EXCHANGERS									
HEAT EXCHANGER USER SIDE IN REFRIGERATION									
Water flow	(1)	l/s	7,87	9,28	10,41	11,87	13,83	14,75	15,62
Pressure drop	(1)	kPa	23,3	32,4	50,9	45,5	61,7	38,0	42,7
REFRIGERANT CIRCUIT									
Compressors nr.		N°	4	4	4	4	4	4	4
No. Circuits		N°	2	2	2	2	2	2	2
Refrigerant charge		kg	22,0	22,0	24,6	26,0	31,6	35,4	35,4
NOISE LEVEL									
Sound Pressure	(3)	dB(A)	60	60	61	62	63	63	63
Sound power level in cooling	(4)(5)	dB(A)	92	92	93	94	95	95	95
SIZE AND WEIGHT									
A	(6)	mm	3160	3160	3160	3160	4335	4335	4335
B	(6)	mm	2250	2250	2250	2250	2250	2250	2250
H	(6)	mm	2170	2170	2170	2170	2170	2170	2170
Operating weight	(6)	kg	1650	1810	1820	1950	2340	2530	2550

Notes:
1 Plant (side) cooling exchanger water (in/out) 12°C/7°C; Source (side) heat exchanger air (in) 35°C.
2 Values in compliance with EN14511-3:2013.
3 Average sound pressure level at 10m distance, unit in a free field on a reflective surface; non-binding value calculated from the sound power level.
4 Sound power on the basis of measurements made in compliance with ISO 9614.
5 Sound power level in cooling, outdoors.
6 Unit in standard configuration/execution, without optional accessories.
7 Seasonal energy efficiency of the cooling environment [REGULATION (EU) N. 2016/2281]
8 Seasonal space heating energy index
9 Seasonal energy efficiency of the space cooling
The units highlighted in this publication contain HFC R410A [GWP_{100} 2088] fluorinated greenhouse gases.
Certified data in EUROVENT

NX / LN-K			0614T	0714T	0814T	0914T	1014T	1114T	1214T
Power supply		V/ph/Hz	400/3/50	400/3/50	400/3/50	400/3/50	400/3/50	400/3/50	400/3/50
PERFORMANCE									
COOLING ONLY (GROSS VALUE)									
Cooling capacity	(1)	kW	160	185	208	235	274	290	320
Total power input	(1)	kW	58,1	68,6	79,6	92,2	101	112	118
EER	(1)	kW/kW	2,75	2,70	2,62	2,55	2,71	2,60	2,70
ESEER	(1)	kW/kW	4,13	4,42	4,37	4,41	4,25	4,25	4,37
COOLING ONLY (EN14511 VALUE)									
Cooling capacity	(1)(2)	kW	159	185	207	234	273	290	319
EER	(1)(2)	kW/kW	2,72	2,67	2,57	2,51	2,67	2,57	2,67
ESEER	(1)(2)	kW/kW	3,99	4,25	4,16	4,21	4,04	4,10	4,21
Cooling energy class			C	D	D	D	D	D	D
ENERGY EFFICIENCY									
SEASONAL EFFICIENCY IN COOLING (Reg. EU 2016/2281)									
Ambient refrigeration									
Prated,c	(7)	kW	159	185	207	234	273	290	319
SEER	(7)(8)		3,84	4,11	4,01	4,06	3,96	4,01	4,07
Performance ηs	(7)(9)	%	150	162	157	159	156	157	160
EXCHANGERS									
HEAT EXCHANGER USER SIDE IN REFRIGERATION									
Water flow	(1)	l/s	7,64	8,87	9,96	11,24	13,10	13,89	15,32
Pressure drop	(1)	kPa	21,9	29,6	46,5	40,7	55,4	33,7	41,0
REFRIGERANT CIRCUIT									
Compressors nr.		N°	4	4	4	4	4	4	4
No. Circuits		N°	2	2	2	2	2	2	2
Refrigerant charge		kg	22,0	22,0	24,6	26,0	31,6	35,4	35,4
NOISE LEVEL									
Sound Pressure	(3)	dB(A)	54	54	55	56	57	57	58
Sound power level in cooling	(4)(5)	dB(A)	86	86	87	88	89	89	90
SIZE AND WEIGHT									
A	(6)	mm	3160	3160	3160	3160	4335	4335	4335
B	(6)	mm	2250	2250	2250	2250	2250	2250	2250
H	(6)	mm	2170	2170	2170	2170	2170	2170	2170
Operating weight	(6)	kg	1700	1860	1870	1990	2380	2580	2600

Notes:
1 Plant (side) cooling exchanger water (in/out) 12°C/7°C; Source (side) heat exchanger air (in) 35°C.
2 Values in compliance with EN14511-3:2013.
3 Average sound pressure level at 10m distance, unit in a free field on a reflective surface; non-binding value calculated from the sound power level.
4 Sound power on the basis of measurements made in compliance with ISO 9614.
5 Sound power level in cooling, outdoors.
6 Unit in standard configuration/execution, without optional accessories.
7 Seasonal energy efficiency of the cooling environment [REGULATION (EU) N. 2016/2281]
8 Seasonal space heating energy index
9 Seasonal energy efficiency of the space cooling
The units highlighted in this publication contain HFC R410A [GWP_{100} 2088] fluorinated greenhouse gases.
Certified data in EUROVENT

NX / SL-K			0614T	0714T	0814T	0914T	1014T	1114T	1214T
Power supply		V/ph/Hz	400/3/50	400/3/50	400/3/50	400/3/50	400/3/50	400/3/50	400/3/50
PERFORMANCE									
COOLING ONLY (GROSS VALUE)									
Cooling capacity	(1)	kW	159	180	214	241	264	296	312
Total power input	(1)	kW	56,3	70,7	77,8	89,3	104	109	120
EER	(1)	kW/kW	2,82	2,54	2,75	2,70	2,55	2,71	2,61
ESEER	(1)	kW/kW	4,34	4,41	4,40	4,41	4,28	4,34	4,26
COOLING ONLY (EN14511 VALUE)									
Cooling capacity	(1)(2)	kW	158	179	213	240	263	295	311
EER	(1)(2)	kW/kW	2,79	2,52	2,71	2,66	2,51	2,68	2,58
ESEER	(1)(2)	kW/kW	4,18	4,24	4,19	4,20	4,07	4,17	4,10
Cooling energy class			C	D	C	D	D	D	D
ENERGY EFFICIENCY									
SEASONAL EFFICIENCY IN COOLING (Reg. EU 2016/2281)									
Ambient refrigeration									
Prated,c	(7)	kW	158	179	213	240	263	295	311
SEER	(7)(8)		4,00	4,08	4,04	4,08	3,97	4,06	3,94
Performance ηs	(7)(9)	%	157	160	158	160	156	159	155
EXCHANGERS									
HEAT EXCHANGER USER SIDE IN REFRIGERATION									
Water flow	(1)	l/s	7,60	8,60	10,25	11,54	12,63	14,16	14,93
Pressure drop	(1)	kPa	21,7	27,8	49,3	43,0	51,4	35,1	39,0
REFRIGERANT CIRCUIT									
Compressors nr.		N°	4	4	4	4	4	4	4
No. Circuits		N°	2	2	2	2	2	2	2
Refrigerant charge		kg	22,0	22,0	30,2	31,6	31,6	41,0	41,0
NOISE LEVEL									
Sound Pressure	(3)	dB(A)	50	51	51	52	52	54	54
Sound power level in cooling	(4)(5)	dB(A)	82	83	83	84	84	86	86
SIZE AND WEIGHT									
A	(6)	mm	3160	3160	4335	4335	4335	5510	5510
B	(6)	mm	2250	2250	2250	2250	2250	2250	2250
H	(6)	mm	2170	2170	2170	2170	2170	2170	2170
Operating weight	(6)	kg	1700	1860	2160	2290	2380	2930	2950

Notes:
1 Plant (side) cooling exchanger water (in/out) 12°C/7°C; Source (side) heat exchanger air (in) 35°C.
2 Values in compliance with EN14511-3:2013.
3 Average sound pressure level at 10m distance, unit in a free field on a reflective surface; non-binding value calculated from the sound power level.
4 Sound power on the basis of measurements made in compliance with ISO 9614.
5 Sound power level in cooling, outdoors.
6 Unit in standard configuration/execution, without optional accessories.
7 Seasonal energy efficiency of the cooling environment [REGULATION (EU) N. 2016/2281]
8 Seasonal space heating energy index
9 Seasonal energy efficiency of the space cooling
The units highlighted in this publication contain HFC R410A [GWP_{100} 2088] fluorinated greenhouse gases.
Certified data in EUROVENT

NX / CA			0614T	0714T	0814T	0914T	1014T	1114T	1214T
Power supply		V/ph/Hz	400/3/50	400/3/50	400/3/50	400/3/50	400/3/50	400/3/50	400/3/50
PERFORMANCE									
COOLING ONLY (GROSS VALUE)									
Cooling capacity	(1)	kW	174	205	235	266	302	330	352
Total power input	(1)	kW	54,4	65,0	72,9	84,1	95,8	103	111
EER	(1)	kW/kW	3,20	3,16	3,23	3,17	3,15	3,21	3,17
ESEER	(1)	kW/kW	4,31	4,26	4,45	4,49	4,43	4,35	4,37
COOLING ONLY (EN14511 VALUE)									
Cooling capacity	(1)(2)	kW	174	204	234	265	301	329	351
EER	(1)(2)	kW/kW	3,16	3,11	3,16	3,11	3,11	3,16	3,12
ESEER	(1)(2)	kW/kW	4,17	4,06	4,20	4,24	4,26	4,17	4,18
Cooling energy class			A	A	A	A	A	A	A
ENERGY EFFICIENCY									
SEASONAL EFFICIENCY IN COOLING (Reg. EU 2016/2281)									
Ambient refrigeration									
Prated,c	(7)	kW	174	204	234	265	301	329	351
SEER	(7)(8)		4,06	4,03	4,10	4,17	4,25	4,13	4,10
Performance ηs	(7)(9)	%	159	158	161	164	167	162	161
EXCHANGERS									
HEAT EXCHANGER USER SIDE IN REFRIGERATION									
Water flow	(1)	l/s	8,33	9,81	11,26	12,74	14,44	15,78	16,83
Pressure drop	(1)	kPa	26,1	36,2	59,5	52,4	36,5	43,6	49,6
REFRIGERANT CIRCUIT									
Compressors nr.		N°	4	4	4	4	4	4	4
No. Circuits		N°	2	2	2	2	2	2	2
Refrigerant charge		kg	22,0	27,6	30,2	31,6	35,4	41,0	41,0
NOISE LEVEL									
Sound Pressure	(3)	dB(A)	60	61	62	63	63	64	65
Sound power level in cooling	(4)(5)	dB(A)	92	93	94	95	95	96	97
SIZE AND WEIGHT									
A	(6)	mm	3160	4335	4335	4335	4335	5510	5510
B	(6)	mm	2250	2250	2250	2250	2250	2250	2250
H	(6)	mm	2170	2170	2170	2170	2170	2170	2170
Operating weight	(6)	kg	1700	2150	2160	2290	2550	2930	2950

Notes:
1 Plant (side) cooling exchanger water (in/out) 12°C/7°C; Source (side) heat exchanger air (in) 35°C.
2 Values in compliance with EN14511-3:2013.
3 Average sound pressure level at 10m distance, unit in a free field on a reflective surface; non-binding value calculated from the sound power level.
4 Sound power on the basis of measurements made in compliance with ISO 9614.
5 Sound power level in cooling, outdoors.
6 Unit in standard configuration/execution, without optional accessories.
7 Seasonal energy efficiency of the cooling environment [REGULATION (EU) N. 2016/2281]
8 Seasonal space heating energy index
9 Seasonal energy efficiency of the space cooling
The units highlighted in this publication contain HFC R410A [GWP_{100} 2088] fluorinated greenhouse gases.
Certified data in EUROVENT

NX / LN-CA			0614T	0714T	0814T	0914T	1014T	1114T	1214T
Power supply		V/ph/Hz	400/3/50	400/3/50	400/3/50	400/3/50	400/3/50	400/3/50	400/3/50
PERFORMANCE									
COOLING ONLY (GROSS VALUE)									
Cooling capacity	(1)	kW	168	198	227	262	295	318	344
Total power input	(1)	kW	52,8	61,6	70,5	82,8	93,2	99,6	109
EER	(1)	kW/kW	3,17	3,22	3,23	3,17	3,16	3,19	3,17
ESEER	(1)	kW/kW	4,56	4,61	4,70	4,71	4,55	4,63	4,70
COOLING ONLY (EN14511 VALUE)									
Cooling capacity	(1)(2)	kW	167	198	226	261	294	317	343
EER	(1)(2)	kW/kW	3,13	3,17	3,16	3,11	3,12	3,15	3,12
ESEER	(1)(2)	kW/kW	4,40	4,40	4,44	4,47	4,39	4,43	4,48
Cooling energy class			A	A	A	A	A	A	A
ENERGY EFFICIENCY									
SEASONAL EFFICIENCY IN COOLING (Reg. EU 2016/2281)									
Ambient refrigeration									
Prated,c	(7)	kW	167	198	226	261	294	317	343
SEER	(7)(8)		4,23	4,31	4,31	4,36	4,37	4,39	4,37
Performance ηs	(7)(9)	%	166	170	169	171	172	172	172
EXCHANGERS									
HEAT EXCHANGER USER SIDE IN REFRIGERATION									
Water flow	(1)	l/s	8,01	9,49	10,87	12,53	14,08	15,21	16,47
Pressure drop	(1)	kPa	24,1	33,8	55,5	50,7	34,7	40,5	47,5
REFRIGERANT CIRCUIT									
Compressors nr.		N°	4	4	4	4	4	4	4
No. Circuits		N°	2	2	2	2	2	2	2
Refrigerant charge		kg	22,0	27,6	30,2	31,6	41,0	41,0	41,0
NOISE LEVEL									
Sound Pressure	(3)	dB(A)	54	55	56	57	58	59	59
Sound power level in cooling	(4)(5)	dB(A)	86	87	88	89	90	91	91
SIZE AND WEIGHT									
A	(6)	mm	3160	4335	4335	4335	5510	5510	5510
B	(6)	mm	2250	2250	2250	2250	2250	2250	2250
H	(6)	mm	2170	2170	2170	2170	2170	2170	2170
Operating weight	(6)	kg	1700	2150	2160	2290	2880	2900	2930

Notes:
1 Plant (side) cooling exchanger water (in/out) 12°C/7°C; Source (side) heat exchanger air (in) 35°C.
2 Values in compliance with EN14511-3:2013.
3 Average sound pressure level at 10m distance, unit in a free field on a reflective surface; non-binding value calculated from the sound power level.
4 Sound power on the basis of measurements made in compliance with ISO 9614.
5 Sound power level in cooling, outdoors.
6 Unit in standard configuration/execution, without optional accessories.
7 Seasonal energy efficiency of the cooling environment [REGULATION (EU) N. 2016/2281]
8 Seasonal space heating energy index
9 Seasonal energy efficiency of the space cooling
The units highlighted in this publication contain HFC R410A [GWP_{100} 2088] fluorinated greenhouse gases.
Certified data in EUROVENT

NX / SL-CA			0614T	0714T	0814T	0914T	1014T	1114T	1214T
Power supply		V/ph/Hz	400/3/50	400/3/50	400/3/50	400/3/50	400/3/50	400/3/50	400/3/50
PERFORMANCE									
COOLING ONLY (GROSS VALUE)									
Cooling capacity	(1)	kW	167	195	224	259	292	317	344
Total power input	(1)	kW	52,3	61,0	69,9	82,0	92,6	99,6	109
EER	(1)	kW/kW	3,20	3,20	3,21	3,16	3,15	3,18	3,16
ESEER	(1)	kW/kW	4,69	4,70	4,68	4,72	4,72	4,68	4,70
COOLING ONLY (EN14511 VALUE)									
Cooling capacity	(1)(2)	kW	167	194	223	258	291	316	342
EER	(1)(2)	kW/kW	3,16	3,15	3,14	3,11	3,11	3,13	3,11
ESEER	(1)(2)	kW/kW	4,52	4,49	4,42	4,47	4,55	4,49	4,47
Cooling energy class			A	A	A	A	A	A	A
ENERGY EFFICIENCY									
SEASONAL EFFICIENCY IN COOLING (Reg. EU 2016/2281)									
Ambient refrigeration									
Prated,c	(7)	kW	167	194	223	258	291	316	342
SEER	(7)(8)		4,33	4,37	4,28	4,35	4,50	4,42	4,35
Performance ηs	(7)(9)	%	170	172	168	171	177	174	171
EXCHANGERS									
HEAT EXCHANGER USER SIDE IN REFRIGERATION									
Water flow	(1)	l/s	8,00	9,32	10,72	12,40	13,95	15,14	16,43
Pressure drop	(1)	kPa	24,1	32,7	53,9	49,6	34,1	40,1	47,2
REFRIGERANT CIRCUIT									
Compressors nr.		N°	4	4	4	4	4	4	4
No. Circuits		N°	2	2	2	2	2	2	2
Refrigerant charge		kg	27,6	27,6	35,8	37,2	41,0	41,0	41,0
NOISE LEVEL									
Sound Pressure	(3)	dB(A)	51	51	52	53	54	55	55
Sound power level in cooling	(4)(5)	dB(A)	83	83	84	85	86	87	87
SIZE AND WEIGHT									
A	(6)	mm	4335	4335	5510	5510	5510	5510	5510
B	(6)	mm	2250	2250	2250	2250	2250	2250	2250
H	(6)	mm	2170	2170	2170	2170	2170	2170	2170
Operating weight	(6)	kg	1980	2150	2490	2610	2880	2900	2930

Notes:
1 Plant (side) cooling exchanger water (in/out) 12°C/7°C; Source (side) heat exchanger air (in) 35°C.
2 Values in compliance with EN14511-3:2013.
3 Average sound pressure level at 10m distance, unit in a free field on a reflective surface; non-binding value calculated from the sound power level.
4 Sound power on the basis of measurements made in compliance with ISO 9614.
5 Sound power level in cooling, outdoors.
6 Unit in standard configuration/execution, without optional accessories.
7 Seasonal energy efficiency of the cooling environment [REGULATION (EU) N. 2016/2281]
8 Seasonal space heating energy index
9 Seasonal energy efficiency of the space cooling
The units highlighted in this publication contain HFC R410A [GWP_{100} 2088] fluorinated greenhouse gases.
Certified data in EUROVENT

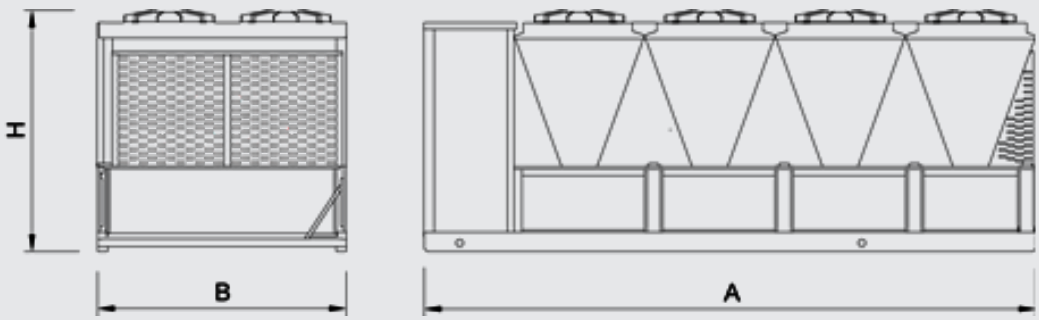

CHILLERS

NECS 1314 - 3218

Chiller, air source for outdoor installation
334-885 kW



Outdoor unit for the production of chilled water with hermetic rotary Scroll compressors, ozone-friendly refrigerant R410A, axial-flow fans, shell and tubes exchanger and electronic expansion valve. The range is composed by units equipped with four, six and eight compressors in multi-circuit configuration.

Version

B	Basic
SL	Super-low noise version
CA	High efficiency version
SL-CA	Super-low noise, high efficiency version

Configurations

-	Basic function
D	Partial condensing heat recovery function
R	Total condensing heat recovery function

Features

REFRIGERANT GAS R410A

The use of R410A allowed to achive better energy efficiencies with environment full respect (ODP = 0)

ALUMINIUM MICRO-CHANNEL HEAT EXCHANGERS

This new range of chiller uses aluminum micro-channel condensers that ensure a premium level of efficiency. This solution also allows to reduce the refrigerant charge with respect to traditional copper/aluminum coils, assuring the minimum allowable ratio between the refrigerant volume and the power capacity thus making this product range unique in the market, also improving the resistance against corrosion in saline or corrosive atmospheres.

EXCHANGER

The shell and tube exchanger allows to achieve the highest flexibility on the units installation, keeping the efficiency at the maximum level. For this reason, NECS represents the best choice for all the hydronic application on the residential, commercial and industrial markets.

ELECTRONIC EXPANSION VALVE SUPPLIED STANDARD

The use of the electronic expansion valve generates considerable benefits, especially in cases of variable demand and different external conditions. It was introduced into these units as a result of accurate design choices concerning the cooling circuit and the optimisation of operation in various different working conditions

INTEGRATED HYDRONIC GROUP

The optional built-in hydronic module already contains the main water circuit components; it is available with single or twin in-line, for achieving both low or high head.

Accessory

- Set-up for remote connectivity with ModBus/Echelon protocol cards
- Remote control keyboard (distance to 200m and to 500m)
- Soft starters

Controls

W3000SE Compact

The controller W3000SE Compact is characterized by proprietary advanced functions and settings. The keyboard commands and a fully functional LCD display, which allows for consultation and intervention unit by means of a multi-layer menu with a choice of the language setting. The temperature control algorithm is based on the exclusive QuickMind with self-adaptive logic, useful in systems with reduced water content. Alternatively, controls may be set proportional or proportional-integral. The diagnostic includes a comprehensive alarm management, with the black box functions (PC) and alarm (via display or PC) for a better analysis of the unit. For systems consisting of multiple units you can control the resource owners through optional devices. It can also be implemented in the accounts of consumption and performance. Supervision is provided via several options, with proprietary devices or integrated into third party systems using the ModBus, Bacnet, Bacnet-over-IP, Echelon LonWorks. Compatibility with remote keyboard (management up to 10 units). The presence of programmable timer allows the creation of a profile containing the operation up to 4 days and 10 bands. To defrost logic is employed owner of an auto-adaptive, characterized by monitoring multiple operating parameters and environmental conditions. This reduces the number and duration of the defrost for the benefit of the overall energy efficiency.



NECS / B			1314	1414	1614	1715	1816	2015	2116
Power supply		V/ph/Hz	400/3/50	400/3/50	400/3/50	400/3/50	400/3/50	400/3/50	400/3/50
PERFORMANCE									
COOLING ONLY (GROSS VALUE)									
Cooling capacity	(1)	kW	354	379	413	458	501	526	569
Total power input	(1)	kW	124	130	148	160	172	184	195
EER	(1)	kW/kW	2,85	2,91	2,80	2,86	2,92	2,86	2,91
ESEER	(1)	kW/kW	4,16	4,24	4,04	4,19	4,21	4,07	4,18
COOLING ONLY (EN14511 VALUE)									
Cooling capacity	(1)(2)	kW	353	377	412	456	499	524	567
EER	(1)(2)	kW/kW	2,80	2,87	2,75	2,81	2,87	2,82	2,87
ESEER	(1)(2)	kW/kW	3,95	4,06	3,86	3,99	3,99	3,91	4,00
Cooling energy class			C	C	C	C	C	C	C
ENERGY EFFICIENCY									
SEASONAL EFFICIENCY IN COOLING (Reg. EU 2016/2281)									
Ambient refrigeration									
Prated,c	(7)	kW	353	377	412	456	499	524	567
SEER	(7)(8)		4,11	4,22	4,10	4,17	4,22	4,10	4,23
Performance ηs	(7)(9)	%	162	166	161	164	166	161	166
EXCHANGERS									
HEAT EXCHANGER USER SIDE IN REFRIGERATION									
Water flow	(1)	l/s	16,94	18,12	19,77	21,91	23,97	25,14	27,23
Pressure drop	(1)	kPa	54,0	43,8	52,2	48,5	58,1	39,3	46,1
REFRIGERANT CIRCUIT									
Compressors nr.		N°	4	4	4	5	6	5	6
No. Circuits		N°	2	2	2	2	2	2	2
Refrigerant charge		kg	39,0	45,0	45,0	53,0	58,0	63,0	67,0
NOISE LEVEL									
Sound Pressure	(3)	dB(A)	64	64	64	64	65	65	64
Sound power level in cooling	(4)(5)	dB(A)	96	96	96	96	97	97	97
SIZE AND WEIGHT									
A	(6)	mm	3905	3905	3905	5080	5080	5080	6255
B	(6)	mm	2260	2260	2260	2260	2260	2260	2260
H	(6)	mm	2450	2450	2450	2450	2450	2450	2450
Operating weight	(6)	kg	2730	2770	2800	3400	3650	3690	4200

NECS / B			2316	2416	2418	2618	2818	3018	3218
Power supply		V/ph/Hz	400/3/50	400/3/50	400/3/50	400/3/50	400/3/50	400/3/50	400/3/50
PERFORMANCE									
COOLING ONLY (GROSS VALUE)									
Cooling capacity	(1)	kW	604	635	665	708	759	793	827
Total power input	(1)	kW	214	219	234	249	261	279	296
EER	(1)	kW/kW	2,82	2,90	2,85	2,85	2,92	2,84	2,80
ESEER	(1)	kW/kW	4,11	4,08	4,12	4,18	4,27	4,20	4,07
COOLING ONLY (EN14511 VALUE)									
Cooling capacity	(1)(2)	kW	602	632	663	705	757	791	824
EER	(1)(2)	kW/kW	2,78	2,86	2,81	2,80	2,88	2,81	2,76
ESEER	(1)(2)	kW/kW	3,94	3,90	3,94	3,98	4,10	4,03	3,90
Cooling energy class			C	C	C	C	C	C	C
ENERGY EFFICIENCY									
SEASONAL EFFICIENCY IN COOLING (Reg. EU 2016/2281)									
Ambient refrigeration									
Prated,c	(7)	kW	602	632	663	705	757	791	824
SEER	(7)(8)		4,15	4,14	4,12	4,17	4,29	4,22	4,10
Performance ηs	(7)(9)	%	163	162	162	164	168	166	161
EXCHANGERS									
HEAT EXCHANGER USER SIDE IN REFRIGERATION									
Water flow	(1)	l/s	28,87	30,36	31,81	33,85	36,31	37,95	39,53
Pressure drop	(1)	kPa	44,3	49,0	48,5	54,9	42,7	46,7	50,6
REFRIGERANT CIRCUIT									
Compressors nr.		N°	6	6	8	8	8	8	8
No. Circuits		N°	3	2	4	4	4	4	4
Refrigerant charge		kg	67,0	76,0	75,0	82,0	93,0	93,0	93,0
NOISE LEVEL									
Sound Pressure	(3)	dB(A)	64	65	65	65	66	66	66
Sound power level in cooling	(4)(5)	dB(A)	97	98	98	98	99	99	99
SIZE AND WEIGHT									
A	(6)	mm	6255	6255	7430	7430	7430	7430	7430
B	(6)	mm	2260	2260	2260	2260	2260	2260	2260
H	(6)	mm	2450	2450	2450	2450	2450	2450	2450
Operating weight	(6)	kg	4220	4350	5260	5300	5370	5400	5430

Notes:
1 Plant (side) cooling exchanger water (in/out) 12°C/7°C; Source (side) heat exchanger air (in) 35°C.
2 Values in compliance with EN14511-3:2013.
3 Average sound pressure level at 10m distance, unit in a free field on a reflective surface; non-binding value calculated from the sound power level.
4 Sound power on the basis of measurements made in compliance with ISO 9614.
5 Sound power level in cooling, outdoors.
6 Unit in standard configuration/execution, without optional accessories.
7 Seasonal energy efficiency of the cooling environment [REGULATION (EU) N. 2016/2281]
8 Seasonal space heating energy index
9 Seasonal energy efficiency of the space cooling
The units highlighted in this publication contain HFC R410A [GWP_{100} 2088] fluorinated greenhouse gases.
Certified data in EUROVENT

NECS / SL			1314	1414	1614	1715	1816	2015	2116
Power supply		V/ph/Hz	400/3/50	400/3/50	400/3/50	400/3/50	400/3/50	400/3/50	400/3/50
PERFORMANCE									
COOLING ONLY (GROSS VALUE)									
Cooling capacity	(1)	kW	334	358	397	431	465	498	532
Total power input	(1)	kW	129	137	153	168	183	192	206
EER	(1)	kW/kW	2,58	2,61	2,60	2,57	2,55	2,60	2,58
ESEER	(1)	kW/kW	4,29	4,31	4,21	4,33	4,36	4,26	4,37
COOLING ONLY (EN14511 VALUE)									
Cooling capacity	(1)(2)	kW	332	357	396	430	463	496	531
EER	(1)(2)	kW/kW	2,55	2,58	2,56	2,53	2,51	2,57	2,55
ESEER	(1)(2)	kW/kW	4,10	4,15	4,03	4,14	4,15	4,12	4,19
Cooling energy class			D	D	D	D	D	D	D
ENERGY EFFICIENCY									
SEASONAL EFFICIENCY IN COOLING (Reg. EU 2016/2281)									
Ambient refrigeration									
Prated,c	(7)	kW	332	357	396	430	463	496	531
SEER	(7)(8)		4,03	4,12	4,02	4,13	4,13	4,14	4,21
Performance ηs	(7)(9)	%	158	162	158	162	162	163	165
EXCHANGERS									
HEAT EXCHANGER USER SIDE IN REFRIGERATION									
Water flow	(1)	l/s	15,95	17,13	19,01	20,63	22,24	23,80	25,46
Pressure drop	(1)	kPa	47,8	39,2	48,2	43,0	50,0	35,2	40,3
REFRIGERANT CIRCUIT									
Compressors nr.		N°	4	4	4	5	6	5	6
No. Circuits		N°	2	2	2	2	2	2	2
Refrigerant charge		kg	42,0	45,0	54,0	57,0	55,0	72,0	71,0
NOISE LEVEL									
Sound Pressure	(3)	dB(A)	54	54	54	54	54	54	54
Sound power level in cooling	(4)(5)	dB(A)	86	86	86	87	87	87	87
SIZE AND WEIGHT									
A	(6)	mm	5080	5080	5080	6255	6255	6255	7430
B	(6)	mm	2260	2260	2260	2260	2260	2260	2260
H	(6)	mm	2450	2450	2450	2450	2450	2450	2450
Operating weight	(6)	kg	3060	3160	3200	3900	4110	4190	4640

NECS / SL			2316	2416	2418	2618	2818	3018	3218
Power supply		V/ph/Hz	400/3/50	400/3/50	400/3/50	400/3/50	400/3/50	400/3/50	400/3/50
PERFORMANCE									
COOLING ONLY (GROSS VALUE)									
Cooling capacity	(1)	kW	579	596	616	666	718	758	795
Total power input	(1)	kW	220	230	245	258	275	288	306
EER	(1)	kW/kW	2,63	2,59	2,52	2,58	2,61	2,63	2,60
ESEER	(1)	kW/kW	4,38	4,29	4,32	4,39	4,36	4,39	4,27
COOLING ONLY (EN14511 VALUE)									
Cooling capacity	(1)(2)	kW	577	594	614	664	716	755	792
EER	(1)(2)	kW/kW	2,60	2,56	2,49	2,55	2,58	2,60	2,56
ESEER	(1)(2)	kW/kW	4,20	4,12	4,15	4,19	4,19	4,21	4,09
Cooling energy class			D	D	E	D	D	D	D
ENERGY EFFICIENCY									
SEASONAL EFFICIENCY IN COOLING (Reg. EU 2016/2281)									
Ambient refrigeration									
Prated,c	(7)	kW	577	594	614	664	716	755	792
SEER	(7)(8)		4,21	4,14	4,11	4,16	4,20	4,21	4,11
Performance ηs	(7)(9)	%	165	163	162	163	165	166	161
EXCHANGERS									
HEAT EXCHANGER USER SIDE IN REFRIGERATION									
Water flow	(1)	l/s	27,70	28,49	29,45	31,87	34,32	36,24	38,00
Pressure drop	(1)	kPa	40,8	43,1	41,6	48,7	38,2	42,6	46,8
REFRIGERANT CIRCUIT									
Compressors nr.		N°	6	6	8	8	8	8	8
No. Circuits		N°	3	2	4	4	4	4	4
Refrigerant charge		kg	77,0	86,0	89,0	89,0	93,0	103	112
NOISE LEVEL									
Sound Pressure	(3)	dB(A)	55	55	55	56	57	57	57
Sound power level in cooling	(4)(5)	dB(A)	88	88	88	89	90	90	90
SIZE AND WEIGHT									
A	(6)	mm	7430	7430	7430	8605	9780	9780	9780
B	(6)	mm	2260	2260	2260	2260	2260	2260	2260
H	(6)	mm	2450	2450	2450	2450	2450	2450	2450
Operating weight	(6)	kg	4730	4790	5410	5810	6160	6200	6250

Notes:
1 Plant (side) cooling exchanger water (in/out) 12°C/7°C; Source (side) heat exchanger air (in) 35°C.
2 Values in compliance with EN14511-3:2013.
3 Average sound pressure level at 10m distance, unit in a free field on a reflective surface; non-binding value calculated from the sound power level.
4 Sound power on the basis of measurements made in compliance with ISO 9614.
5 Sound power level in cooling, outdoors.
6 Unit in standard configuration/execution, without optional accessories.
7 Seasonal energy efficiency of the cooling environment [REGULATION (EU) N. 2016/2281]
8 Seasonal space heating energy index
9 Seasonal energy efficiency of the space cooling
The units highlighted in this publication contain HFC R410A [GWP_{100} 2088] fluorinated greenhouse gases.
Certified data in EUROVENT

NECS / CA			1314	1414	1614	1715	1816	2015	2116
Power supply		V/ph/Hz	400/3/50	400/3/50	400/3/50	400/3/50	400/3/50	400/3/50	400/3/50
PERFORMANCE									
COOLING ONLY (GROSS VALUE)									
Cooling capacity	(1)	kW	370	391	438	481	518	549	591
Total power input	(1)	kW	120	125	142	154	166	177	189
EER	(1)	kW/kW	3,10	3,13	3,10	3,12	3,11	3,10	3,12
ESEER	(1)	kW/kW	4,45	4,48	4,39	4,54	4,50	4,42	4,48
COOLING ONLY (EN14511 VALUE)									
Cooling capacity	(1)(2)	kW	369	390	436	479	515	547	589
EER	(1)(2)	kW/kW	3,04	3,08	3,04	3,07	3,05	3,06	3,07
ESEER	(1)(2)	kW/kW	4,22	4,28	4,17	4,30	4,24	4,23	4,28
Cooling energy class			B	B	B	B	B	B	B
ENERGY EFFICIENCY									
SEASONAL EFFICIENCY IN COOLING (Reg. EU 2016/2281)									
Ambient refrigeration									
Prated,c	(7)	kW	369	390	436	479	515	547	589
SEER	(7)(8)		4,16	4,25	4,14	4,26	4,19	4,23	4,27
Performance ηs	(7)(9)	%	164	167	163	167	165	166	168
EXCHANGERS									
HEAT EXCHANGER USER SIDE IN REFRIGERATION									
Water flow	(1)	l/s	17,72	18,72	20,97	23,01	24,75	26,26	28,28
Pressure drop	(1)	kPa	59,0	46,8	58,7	53,5	61,9	42,9	49,8
REFRIGERANT CIRCUIT									
Compressors nr.		N°	4	4	4	5	6	5	6
No. Circuits		N°	2	2	2	2	2	2	2
Refrigerant charge		kg	46,0	54,0	54,0	62,0	67,0	72,0	77,0
NOISE LEVEL									
Sound Pressure	(3)	dB(A)	65	65	65	64	65	65	65
Sound power level in cooling	(4)(5)	dB(A)	97	97	97	97	98	98	98
SIZE AND WEIGHT									
A	(6)	mm	5080	5080	5080	6255	6255	6255	7430
B	(6)	mm	2260	2260	2260	2260	2260	2260	2260
H	(6)	mm	2450	2450	2450	2450	2450	2450	2450
Operating weight	(6)	kg	3060	3100	3130	3800	4050	4090	4540

NECS / CA			2316	2416	2418	2618	2818	3018	3218
Power supply		V/ph/Hz	400/3/50	400/3/50	400/3/50	400/3/50	400/3/50	400/3/50	400/3/50
PERFORMANCE									
COOLING ONLY (GROSS VALUE)									
Cooling capacity	(1)	kW	633	657	701	740	785	831	885
Total power input	(1)	kW	204	212	225	239	250	266	283
EER	(1)	kW/kW	3,10	3,10	3,11	3,10	3,13	3,12	3,13
ESEER	(1)	kW/kW	4,48	4,37	4,44	4,46	4,50	4,49	4,45
COOLING ONLY (EN14511 VALUE)									
Cooling capacity	(1)(2)	kW	630	655	699	737	782	828	881
EER	(1)(2)	kW/kW	3,06	3,05	3,06	3,04	3,09	3,07	3,07
ESEER	(1)(2)	kW/kW	4,27	4,16	4,22	4,22	4,30	4,28	4,22
Cooling energy class			B	B	B	B	B	B	B
ENERGY EFFICIENCY									
SEASONAL EFFICIENCY IN COOLING (Reg. EU 2016/2281)									
Ambient refrigeration									
Prated,c	(7)	kW	630	655	699	737	782	828	881
SEER	(7)(8)		4,28	4,17	4,18	4,17	4,28	4,27	4,21
Performance ηs	(7)(9)	%	168	164	164	164	168	168	166
EXCHANGERS									
HEAT EXCHANGER USER SIDE IN REFRIGERATION									
Water flow	(1)	l/s	30,26	31,43	33,55	35,39	37,52	39,72	42,31
Pressure drop	(1)	kPa	48,6	52,5	54,0	60,0	45,6	51,1	58,0
REFRIGERANT CIRCUIT									
Compressors nr.		N°	6	6	8	8	8	8	8
No. Circuits		N°	3	2	4	4	4	4	4
Refrigerant charge		kg	81,0	86,0	89,0	99,0	112	112	112
NOISE LEVEL									
Sound Pressure	(3)	dB(A)	66	66	66	66	67	67	67
Sound power level in cooling	(4)(5)	dB(A)	99	99	99	99	100	100	100
SIZE AND WEIGHT									
A	(6)	mm	7430	7430	9780	9780	9780	9780	9780
B	(6)	mm	2260	2260	2260	2260	2260	2260	2260
H	(6)	mm	2450	2450	2450	2450	2450	2450	2450
Operating weight	(6)	kg	4630	4690	5930	5970	6040	6070	6110

Notes:
1 Plant (side) cooling exchanger water (in/out) 12°C/7°C; Source (side) heat exchanger air (in) 35°C.
2 Values in compliance with EN14511-3:2013.
3 Average sound pressure level at 10m distance, unit in a free field on a reflective surface; non-binding value calculated from the sound power level.
4 Sound power on the basis of measurements made in compliance with ISO 9614.
5 Sound power level in cooling, outdoors.
6 Unit in standard configuration/execution, without optional accessories.
7 Seasonal energy efficiency of the cooling environment [REGULATION (EU) N. 2016/2281]
8 Seasonal space heating energy index
9 Seasonal energy efficiency of the space cooling
The units highlighted in this publication contain HFC R410A [GWP_{100} 2088] fluorinated greenhouse gases.
Certified data in EUROVENT

NECS / SL-CA			1314	1414	1614	1715	1816
Power supply		V/ph/Hz	400/3/50	400/3/50	400/3/50	400/3/50	400/3/50
PERFORMANCE							
COOLING ONLY (GROSS VALUE)							
Cooling capacity	(1)	kW	370	394	440	481	522
Total power input	(1)	kW	119	126	142	154	167
EER	(1)	kW/kW	3,11	3,12	3,11	3,12	3,12
ESEER	(1)	kW/kW	4,57	4,56	4,44	4,54	4,58
COOLING ONLY (EN14511 VALUE)							
Cooling capacity	(1)(2)	kW	369	393	438	480	520
EER	(1)(2)	kW/kW	3,07	3,08	3,06	3,08	3,08
ESEER	(1)(2)	kW/kW	4,38	4,39	4,27	4,39	4,40
Cooling energy class			B	B	B	B	B
ENERGY EFFICIENCY							
SEASONAL EFFICIENCY IN COOLING (Reg. EU 2016/2281)							
Ambient refrigeration							
Prated,c	(7)	kW	369	393	438	480	520
SEER	(7)(8)		4,32	4,37	4,26	4,40	4,37
Performance ηs	(7)(9)	%	170	172	167	173	172
EXCHANGERS							
HEAT EXCHANGER USER SIDE IN REFRIGERATION							
Water flow	(1)	l/s	17,72	18,85	21,05	22,99	24,94
Pressure drop	(1)	kPa	41,9	35,9	44,8	32,9	38,7
REFRIGERANT CIRCUIT							
Compressors nr.		N°	4	4	4	5	6
No. Circuits		N°	2	2	2	2	2
Refrigerant charge		kg	53,0	67,0	67,0	77,0	81,0
NOISE LEVEL							
Sound Pressure	(3)	dB(A)	53	53	53	54	54
Sound power level in cooling	(4)(5)	dB(A)	86	86	86	87	87
SIZE AND WEIGHT							
A	(6)	mm	6255	6255	6255	7430	7430
B	(6)	mm	2260	2260	2260	2260	2260
H	(6)	mm	2450	2450	2450	2450	2450
Operating weight	(6)	kg	3490	3700	3730	4400	4650

NECS / SL-CA			2015	2116	2316	2416	2418
Power supply		V/ph/Hz	400/3/50	400/3/50	400/3/50	400/3/50	400/3/50
PERFORMANCE							
COOLING ONLY (GROSS VALUE)							
Cooling capacity	(1)	kW	550	592	638	662	695
Total power input	(1)	kW	177	189	204	213	223
EER	(1)	kW/kW	3,11	3,13	3,12	3,11	3,12
ESEER	(1)	kW/kW	4,52	4,60	4,59	4,53	4,58
COOLING ONLY (EN14511 VALUE)							
Cooling capacity	(1)(2)	kW	549	590	636	660	693
EER	(1)(2)	kW/kW	3,08	3,08	3,08	3,06	3,09
ESEER	(1)(2)	kW/kW	4,35	4,40	4,39	4,33	4,43
Cooling energy class			B	B	B	B	B
ENERGY EFFICIENCY							
SEASONAL EFFICIENCY IN COOLING (Reg. EU 2016/2281)							
Ambient refrigeration							
Prated,c	(7)	kW	549	590	636	660	693
SEER	(7)(8)		4,37	4,39	4,40	4,33	4,39
Performance ηs	(7)(9)	%	172	173	173	170	173
EXCHANGERS							
HEAT EXCHANGER USER SIDE IN REFRIGERATION							
Water flow	(1)	l/s	26,32	28,29	30,52	31,68	33,25
Pressure drop	(1)	kPa	36,8	42,5	44,7	48,1	35,8
REFRIGERANT CIRCUIT							
Compressors nr.		N°	5	6	6	6	8
No. Circuits		N°	2	2	3	2	4
Refrigerant charge		kg	86,0	91,0	96,0	98,0	98,0
NOISE LEVEL							
Sound Pressure	(3)	dB(A)	54	54	55	55	55
Sound power level in cooling	(4)(5)	dB(A)	87	87	88	88	88
SIZE AND WEIGHT							
A	(6)	mm	7430	8605	8605	8605	9780
B	(6)	mm	2260	2260	2260	2260	2260
H	(6)	mm	2450	2450	2450	2450	2450
Operating weight	(6)	kg	4510	4990	5360	5360	6100

Notes:
1 Plant (side) cooling exchanger water (in/out) 12°C/7°C; Source (side) heat exchanger air (in) 35°C.
2 Values in compliance with EN14511-3:2013.
3 Average sound pressure level at 10m distance, unit in a free field on a reflective surface; non-binding value calculated from the sound power level.
4 Sound power on the basis of measurements made in compliance with ISO 9614.
5 Sound power level in cooling, outdoors.
6 Unit in standard configuration/execution, without optional accessories.
7 Seasonal energy efficiency of the cooling environment [REGULATION (EU) N. 2016/2281]
8 Seasonal space heating energy index
9 Seasonal energy efficiency of the space cooling
The units highlighted in this publication contain HFC R410A [GWP_{100} 2088] fluorinated greenhouse gases.
Certified data in EUROVENT

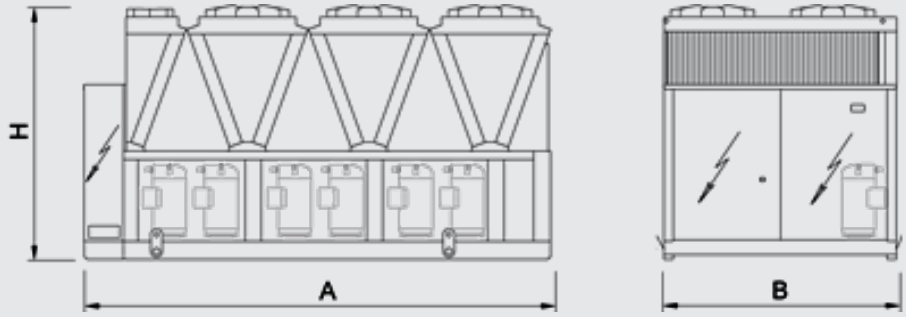
H
A
B

CHILLERS

FX 0751 - 1801

Chiller, air source for outdoor installation 140-396 kW



Outdoor unit for the production of chilled water with semi-hermetic screw compressor optimized for R134a, axial-flow fans, micro-channel full-aluminum condensing coils, single-pass shell and tubes evaporator designed by Mitsubishi Electric Hydronics & IT Cooling Systems S.p.A. (brazed plate evaporator for sizes 0751 and 0851) and electronic expansion valve.
Base and supporting structure and panels are of galvanized epoxy powder coated steel with increased thickness. Eurovent certification.
Flexible and reliable unit; it easily adapts itself to different thermal load conditions thanks to the precise thermoregulation and the accurate sizing of all internal components. The compressors feature an enhanced lubrication system, an innovative internal geometry and a different control of capacity steps. Innovations that grant a remarkable performance improvement especially at partial loads.

Version

K	Standard efficiency
SL-K	Super low noise, standard efficiency

Configurations

-	Basic function
D	Partial condensing heat recovery function
R	Total condensing heat recovery function

Features

HIGH EFFICIENCY
Very high efficiency at full and partial load, at the highest market levels, thanks to the adopted technological solutions. These units ensure low operating costs and therefore a quick payback time.
COMPACTNESS
Compactness in terms of overall size and weight, helping installation and working on site
EXTREMELY SILENT OPERATION
As the result of a systematic design oriented to minimize the noise level, the silenced version units give the best combination of quietness and efficiency on the market.
FLEXIBILITY
Flexibility in the applications thanks to the many configurations and versions available.
WIDE OPERATING RANGE
The accurate condensation control (variable fan speed regulation as per standard on every model) and devoted kits allow unit's operation from -10°C (-20°C with accessories) to 46°C (50°C with accessories) of outdoor air temperature and from -8°C to 18°C (20°C with accessories) of evaporator leaving water temperature.
ALUMINIUM MICRO-CHANNEL HEAT EXCHANGERS
The full aluminium micro-channel condenser coils deliver high efficiency whilst ensuring a reduced refrigerant volume and a lower unit weight. The e-coating protection (optional) grants the highest level of resistance to corrosion in any condition, even in the most aggressive environments.
INTEGRATED HYDRONIC GROUP
The built-in hydronic group (optional) includes the main water circuit components. It is available with 1 or 2 pumps, fixed or variable speed, high or low head to satisfy all the different industrial and comfort application requirements.

Accessory

- Noise reducer (only on not silenced versions)
- EC fans with electronic DC brushless motor
- Microchannel coils with e-coating protection
- Traditional coils with copper tubes and alluminium fins, also available with prepainted fins or Fin Guard Silver protective treatment.
- Compressor enclosure (standard on silenced versions)
- Leak detector
- Kit HT to increase the unit operating conditions range
- Compressor power factor correction
- Soft start
- Hydronic group
- VPF (Variable Primary Flow) system
- Set-up for remote connectivity with ModBus, Echelon, Bacnet, Bacnet over-IP.
- Remote control keyboard (distance to 200m and to 500m)

Controls

W3000TE
The W3000TE controller offers advanced functions and algorithms.
KIPlink - Keyboard In Your Pocket - is the innovative user interface based on WiFi technology that allows one to operate on the unit directly from the smartphone or tablet. Using KIPlink, it is possible to turn the unit on and off, adjust the set-point, plot the main operating variables, monitor in detail the status of the refrigerant circuits, the compressors, the fans and the pumps (if present) and display and reset the possible alarms. In addition to or as an alternative, the Touch interface, with a 7" WVGA colour display and a front USB port, or the Large keyboard, with a wide LCD display and led icons, are available. The temperature control is characterized by the continuous capacity modulation, based on PID algorithms with dynamic neutral zone related to the leaving water temperature. The diagnostics comprises a complete alarm management system, with the "black-box" (via PC) and the alarm history display (via user interface or also PC) for enhanced analysis of the unit operation.
Optional proprietary devices can perform the adjustment of the resources in systems made of several units. Consumption metering and performance measurement are possible as well. Supervision can be easily developed via proprietary devices or the integration in third party systems by means of the most common protocols as ModBus, Bacnet, Bacnet-over-IP, LonWorks. Compatibility with the remote keyboard (up to 8 units). The programmable timer manages a weekly schedule organized into time bands to optimise unit performance by minimising power consumption during periods of inactivity. Up to 10 daily time bands can be associated with different operating set points. As an option (VPF package), the modulation of capacity is integrated with the modulation of the water flow, by means of inverter and dedicated resources for the hydraulic circuit.

FX /K			0751	0851	0951	0961	1101
Power supply		V/ph/Hz	400/3/50	400/3/50	400/3/50	400/3/50	400/3/50
PERFORMANCE							
COOLING ONLY (GROSS VALUE)							
Cooling capacity	(1)	kW	145	160	203	222	238
Total power input	(1)	kW	50,0	58,6	63,7	73,3	85,2
EER	(1)	kW/kW	2,91	2,73	3,18	3,03	2,79
ESEER	(1)	kW/kW					
COOLING ONLY (EN14511 VALUE)							
Cooling capacity	(1)(2)	kW	145	160	202	221	237
EER	(1)(2)	kW/kW	2,88	2,70	3,14	2,98	2,75
ESEER	(1)(2)	kW/kW	-	-	-	-	-
Cooling energy class			C	C	A	B	C
ENERGY EFFICIENCY							
SEASONAL EFFICIENCY IN COOLING (Reg. EU 2016/2281)							
Ambient refrigeration							
Prated,c	(7)	kW	145	160	202	221	237
SEER	(7)(8)		3,86	3,88	3,95	3,95	3,91
Performance ηs	(7)(9)	%	152	152	155	155	153
EXCHANGERS							
HEAT EXCHANGER USER SIDE IN REFRIGERATION							
Water flow	(1)	l/s	6,96	7,65	9,70	10,61	11,38
Pressure drop	(1)	kPa	20,6	20,1	30,2	36,2	41,6
REFRIGERANT CIRCUIT							
Compressors nr.		N°	1	1	1	1	1
No. Circuits		N°	1	1	1	1	1
Refrigerant charge		kg	20,0	22,0	28,0	31,0	33,0
NOISE LEVEL							
Sound Pressure	(3)	dB(A)	62	62	62	62	64
Sound power level in cooling	(4)(5)	dB(A)	94	94	94	94	96
SIZE AND WEIGHT							
A	(6)	mm	1500	1500	2750	2750	2750
B	(6)	mm	2260	2260	2260	2260	2260
H	(6)	mm	2500	2500	2500	2500	2500
Operating weight	(6)	kg	1480	1510	2150	2180	2510

FX /K			1301	1401	1421	1431	1801
Power supply		V/ph/Hz	400/3/50	400/3/50	400/3/50	400/3/50	400/3/50
PERFORMANCE							
COOLING ONLY (GROSS VALUE)							
Cooling capacity	(1)	kW	275	299	329	348	396
Total power input	(1)	kW	88,0	103	119	112	135
EER	(1)	kW/kW	3,12	2,92	2,77	3,12	2,93
ESEER	(1)	kW/kW					
COOLING ONLY (EN14511 VALUE)							
Cooling capacity	(1)(2)	kW	274	298	328	347	394
EER	(1)(2)	kW/kW	3,07	2,87	2,73	3,08	2,89
ESEER	(1)(2)	kW/kW	-	-	-	-	-
Cooling energy class			B	C	C	B	C
ENERGY EFFICIENCY							
SEASONAL EFFICIENCY IN COOLING (Reg. EU 2016/2281)							
Ambient refrigeration							
Prated,c	(7)	kW	274	298	328	347	394
SEER	(7)(8)		3,91	3,88	3,91	3,96	3,95
Performance ηs	(7)(9)	%	154	152	153	155	155
EXCHANGERS							
HEAT EXCHANGER USER SIDE IN REFRIGERATION							
Water flow	(1)	l/s	13,14	14,30	15,73	16,63	18,92
Pressure drop	(1)	kPa	42,5	50,4	44,9	29,5	38,2
REFRIGERANT CIRCUIT							
Compressors nr.		N°	1	1	1	1	1
No. Circuits		N°	1	1	1	1	1
Refrigerant charge		kg	38,0	42,0	46,0	49,0	55,0
NOISE LEVEL							
Sound Pressure	(3)	dB(A)	64	65	66	66	66
Sound power level in cooling	(4)(5)	dB(A)	96	97	98	98	98
SIZE AND WEIGHT							
A	(6)	mm	2750	2750	2750	4000	4000
B	(6)	mm	2260	2260	2260	2260	2260
H	(6)	mm	2500	2500	2500	2500	2500
Operating weight	(6)	kg	2510	2540	3030	3160	3590

Notes:
1 Plant (side) cooling exchanger water (in/out) 12°C/7°C; Source (side) heat exchanger air (in) 35°C.
2 Values in compliance with EN14511-3:2013.
3 Average sound pressure level at 10m distance, unit in a free field on a reflective surface; non-binding value calculated from the sound power level.
4 Sound power on the basis of measurements made in compliance with ISO 9614.
5 Sound power level in cooling, outdoors.
6 Unit in standard configuration/execution, without optional accessories.
7 Seasonal energy efficiency of the cooling environment [REGULATION (EU) N. 2016/2281]
8 Seasonal space heating energy index
9 Seasonal energy efficiency of the space cooling
The units highlighted in this publication contain HFC R134a [GWP_{100} 1430] fluorinated greenhouse gases.
Certified data in EUROVENT

FX /SL-K			0751	0851	0951	0961	1101
Power supply		V/ph/Hz	400/3/50	400/3/50	400/3/50	400/3/50	400/3/50
PERFORMANCE							
COOLING ONLY (GROSS VALUE)							
Cooling capacity	(1)	kW	140	170	196	215	246
Total power input	(1)	kW	50,4	53,9	64,3	74,8	80,1
EER	(1)	kW/kW	2,78	3,14	3,04	2,87	3,07
ESEER	(1)	kW/kW					
COOLING ONLY (EN14511 VALUE)							
Cooling capacity	(1)(2)	kW	140	169	195	214	245
EER	(1)(2)	kW/kW	2,75	3,11	3,00	2,83	3,02
ESEER	(1)(2)	kW/kW	-	-	-	-	-
Cooling energy class			C	A	B	C	B
ENERGY EFFICIENCY							
SEASONAL EFFICIENCY IN COOLING (Reg. EU 2016/2281)							
Ambient refrigeration							
Prated,c	(7)	kW	140	169	195	214	245
SEER	(7)(8)		3,82	4,09	3,93	3,93	4,00
Performance ηs	(7)(9)	%	150	161	154	154	157
EXCHANGERS							
HEAT EXCHANGER USER SIDE IN REFRIGERATION							
Water flow	(1)	l/s	6,70	8,11	9,35	10,27	11,76
Pressure drop	(1)	kPa	19,1	22,6	28,1	33,9	44,4
REFRIGERANT CIRCUIT							
Compressors nr.		N°	1	1	1	1	1
No. Circuits		N°	1	1	1	1	1
Refrigerant charge		kg	21,0	25,0	29,0	32,0	37,0
NOISE LEVEL							
Sound Pressure	(3)	dB(A)	52	52	53	53	55
Sound power level in cooling	(4)(5)	dB(A)	84	84	85	85	87
SIZE AND WEIGHT							
A	(6)	mm	1500	2750	2750	2750	2750
B	(6)	mm	2260	2260	2260	2260	2260
H	(6)	mm	2500	2500	2500	2500	2500
Operating weight	(6)	kg	1640	2090	2310	2340	2770

FX /SL-K			1301	1401	1421	1431	1801
Power supply		V/ph/Hz	400/3/50	400/3/50	400/3/50	400/3/50	400/3/50
PERFORMANCE							
COOLING ONLY (GROSS VALUE)							
Cooling capacity	(1)	kW	265	288	332	346	395
Total power input	(1)	kW	89,1	105	113	108	130
EER	(1)	kW/kW	2,97	2,75	2,95	3,21	3,04
ESEER	(1)	kW/kW					
COOLING ONLY (EN14511 VALUE)							
Cooling capacity	(1)(2)	kW	264	287	330	346	394
EER	(1)(2)	kW/kW	2,93	2,71	2,90	3,18	3,00
ESEER	(1)(2)	kW/kW	-	-	-	-	-
Cooling energy class			B	C	B	A	B
ENERGY EFFICIENCY							
SEASONAL EFFICIENCY IN COOLING (Reg. EU 2016/2281)							
Ambient refrigeration							
Prated,c	(7)	kW	264	287	330	346	394
SEER	(7)(8)		3,89	3,85	4,10	4,29	4,02
Performance ηs	(7)(9)	%	152	151	161	168	158
EXCHANGERS							
HEAT EXCHANGER USER SIDE IN REFRIGERATION							
Water flow	(1)	l/s	12,67	13,76	15,86	16,57	18,89
Pressure drop	(1)	kPa	39,5	46,6	45,7	29,3	38,1
REFRIGERANT CIRCUIT							
Compressors nr.		N°	1	1	1	1	1
No. Circuits		N°	1	1	1	1	1
Refrigerant charge		kg	40,0	43,0	50,0	52,0	59,0
NOISE LEVEL							
Sound Pressure	(3)	dB(A)	55	56	57	57	57
Sound power level in cooling	(4)(5)	dB(A)	87	88	89	89	89
SIZE AND WEIGHT							
A	(6)	mm	2750	2750	4000	4000	4000
B	(6)	mm	2260	2260	2260	2260	2260
H	(6)	mm	2500	2500	2500	2500	2500
Operating weight	(6)	kg	2770	3250	3300	3410	3880

Notes:
1 Plant (side) cooling exchanger water (in/out) 12°C/7°C; Source (side) heat exchanger air (in) 35°C.
2 Values in compliance with EN14511-3:2013.
3 Average sound pressure level at 10m distance, unit in a free field on a reflective surface; non-binding value calculated from the sound power level.
4 Sound power on the basis of measurements made in compliance with ISO 9614.
5 Sound power level in cooling, outdoors.
6 Unit in standard configuration/execution, without optional accessories.
7 Seasonal energy efficiency of the cooling environment [REGULATION (EU) N. 2016/2281]
8 Seasonal space heating energy index
9 Seasonal energy efficiency of the space cooling
The units highlighted in this publication contain HFC R134a [GWP_{100} 1430] fluorinated greenhouse gases.
Certified data in EUROVENT

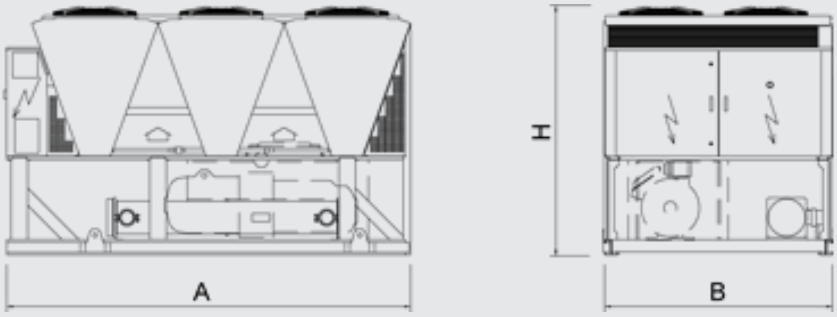
A
H
B

CHILLERS

FX 1502 - 7223

Chiller, air source for outdoor installation 289-1710 kW



Outdoor unit for the production of chilled water with semi-hermetic screw compressors optimized for R134a, axial-flow fans, micro-channel full-aluminum condensing coils, single-pass shell and tubes evaporator designed by Mitsubishi Electric Hydronics & IT Cooling Systems S.p.A. and electronic expansion valve.
Base and supporting structure and panels are of galvanized epoxy powder coated steel with increased thickness. Eurovent certification.
Flexible and reliable unit; it easily adapts itself to different thermal load conditions thanks to the precise thermoregulation and the accurate sizing of all internal components. The compressors feature an enhanced lubrication system, an innovative internal geometry and a different control of capacity steps. Innovations that grant a remarkable performance improvement especially at partial loads.

Version

K	Standard efficiency
SL-K	Super low noise, standard efficiency
CA	High efficiency
SL-CA	Super low noise, high efficiency
E	Very high efficiency
SL-E	Super low noise, very high efficiency

Configurations

-	Basic function
D	Partial condensing heat recovery function
R	Total condensing heat recovery function

Features

HIGH EFFICIENCY
Very high efficiency at full and partial load, at the highest market levels, thanks to the adopted technological solutions. These units ensure low operating costs and therefore a quick payback time.
EXTREMELY SILENT OPERATION
As the result of a systematic design oriented to minimize the noise level, the silenced version units give the best combination of quietness and efficiency on the market.
FLEXIBILITY
Flexibility in the applications thanks to the many configurations and versions available.
WIDE OPERATING RANGE
The accurate condensation control (variable fan speed regulation as per standard on every model) and devoted kits allow unit's operation from -10°C (-20°C with accessories) to 50°C (54°C with accessories) of outdoor air temperature and from -8°C to 18°C (20°C with accessories) of evaporator leaving water temperature.
ALUMINIUM MICRO-CHANNEL HEAT EXCHANGERS
The full aluminium micro-channel condenser coils deliver high efficiency whilst ensuring a reduced refrigerant volume and a lower unit weight. The e-coating protection (optional) grants the highest level of resistance to corrosion in any condition, even in the most aggressive environments.
INTEGRATED HYDRONIC GROUP
The built-in hydronic group (optional) includes the main water circuit components. The 2 pumps are in twin configuration and available with 2 or 4-pole motor, fixed or variable speed, high or low head to satisfy all the different industrial and comfort application requirements.

Accessory

- Noise reducer (only on not silenced versions)
- EC fans with electronic DC brushless motor
- Microchannel coils with e-coating protection
- Traditional coils with copper tubes and alluminium fins, also available with prepainted fins or Fin Guard Silver protective treatment.
- Compressor enclosure (standard on silenced versions)
- Leak detector
- Kit HT to increase the unit operating conditions range
- Compressor power factor correction
- Soft start
- Hydronic group
- VPF (Variable Primary Flow) system
- Set-up for remote connectivity with ModBus, Echelon, Bacnet, Bacnet over-IP.
- Remote control keyboard (distance to 200m and to 500m)

Controls

W3000TE
The W3000TE controller offers advanced functions and algorithms.
KIPlink - Keyboard In Your Pocket - is the innovative user interface based on WiFi technology that allows one to operate on the unit directly from the smartphone or tablet. Using KIPlink, it is possible to turn the unit on and off, adjust the set-point, plot the main operating variables, monitor in detail the status of the refrigerant circuits, the compressors, the fans and the pumps (if present) and display and reset the possible alarms. In addition to or as an alternative, the Touch interface, with a 7" WVGA colour display and a front USB port, or the Large keyboard, with a wide LCD display and led icons, are available. The temperature control is characterized by the continuous capacity modulation, based on PID algorithms with dynamic neutral zone related to the leaving water temperature. The diagnostics comprises a complete alarm management system, with the "black-box" (via PC) and the alarm history display (via user interface or also PC) for enhanced analysis of the unit operation.
Optional proprietary devices can perform the adjustment of the resources in systems made of several units. Consumption metering and performance measurement are possible as well. Supervision can be easily developed via proprietary devices or the integration in third party systems by means of the most common protocols as ModBus, Bacnet, Bacnet-over-IP, LonWorks. Compatibility with the remote keyboard (up to 8 units). The programmable timer manages a weekly schedule organized into time bands to optimise unit performance by minimising power consumption during periods of inactivity. Up to 10 daily time bands can be associated with different operating set points. As an option (VPF package), the modulation of capacity is integrated with the modulation of the water flow, by means of inverter and dedicated resources for the hydraulic circuit.

KIP LINK
Keyboard In your Pocket

FX /K			1502	1702	1902	1922	2202	2602	2652	2702	2722
Power supply		V/ph/Hz	400/3/50	400/3/50	400/3/50	400/3/50	400/3/50	400/3/50	400/3/50	400/3/50	400/3/50
PERFORMANCE											
COOLING ONLY (GROSS VALUE)											
Cooling capacity	(1)	kW	300	326	383	432	481	533	559	601	658
Total power input	(1)	kW	101	117	131	143	169	185	194	204	235
EER	(1)	kW/kW	2,98	2,78	2,93	3,01	2,84	2,88	2,88	2,95	2,80
ESEER	(1)	kW/kW	4,26	4,26	4,29	4,32	4,25	4,28	4,28	4,31	4,30
COOLING ONLY (EN14511 VALUE)											
Cooling capacity	(1)(2)	kW	299	325	382	430	479	532	557	599	656
EER	(1)(2)	kW/kW	2,95	2,76	2,90	2,97	2,81	2,85	2,85	2,91	2,77
ESEER	(1)(2)	kW/kW	4,13	4,12	4,14	4,13	4,11	4,11	4,13	4,14	4,14
Cooling energy class			B	C	B	B	C	C	C	B	C
ENERGY EFFICIENCY											
SEASONAL EFFICIENCY IN COOLING (Reg. EU 2016/2281)											
Ambient refrigeration											
Prated,c	(7)	kW	299	325	382	430	479	532	557	599	656
SEER	(7)(8)		4,15	4,12	4,17	4,18	4,15	4,14	4,11	4,19	4,17
Performance ηs	(7)(9)	%	163	162	164	164	163	162	162	164	164
EXCHANGERS											
HEAT EXCHANGER USER SIDE IN REFRIGERATION											
Water flow	(1)	l/s	14,33	15,58	18,32	20,66	22,98	25,51	26,72	28,73	31,48
Pressure drop	(1)	kPa	23,9	28,3	33,6	42,7	32,3	39,8	34,9	40,3	38,5
REFRIGERANT CIRCUIT											
Compressors nr.		N°	2	2	2	2	2	2	2	2	2
No. Circuits		N°	2	2	2	2	2	2	2	2	2
Refrigerant charge		kg	44,0	47,0	55,0	63,0	69,0	76,0	80,0	88,0	94,0
NOISE LEVEL											
Sound Pressure	(3)	dB(A)	67	67	67	68	68	68	68	68	70
Sound power level in cooling	(4)(5)	dB(A)	99	99	99	100	100	100	100	100	102
SIZE AND WEIGHT											
A	(6)	mm	2750	2750	4000	4000	4000	5250	5250	5250	5250
B	(6)	mm	2260	2260	2260	2260	2260	2260	2260	2260	2260
H	(6)	mm	2500	2500	2500	2500	2500	2500	2500	2500	2500
Operating weight	(6)	kg	3160	3170	3720	3810	4610	5060	5060	5130	5520

FX /K			3152	3602	3902	4202	4502	4802	4812	4822	5412
Power supply		V/ph/Hz	400/3/50	400/3/50	400/3/50	400/3/50	400/3/50	400/3/50	400/3/50	400/3/50	400/3/50
PERFORMANCE											
COOLING ONLY (GROSS VALUE)											
Cooling capacity	(1)	kW	725	803	872	926	982	1021	1059	1146	1176
Total power input	(1)	kW	250	267	290	310	337	363	348	389	415
EER	(1)	kW/kW	2,90	3,00	3,01	2,99	2,92	2,82	3,04	2,95	2,83
ESEER	(1)	kW/kW	4,29	4,26	4,26	4,29	4,27	4,27	4,28	4,31	4,27
COOLING ONLY (EN14511 VALUE)											
Cooling capacity	(1)(2)	kW	723	800	869	923	979	1018	1055	1142	1172
EER	(1)(2)	kW/kW	2,86	2,97	2,97	2,95	2,88	2,78	3,00	2,90	2,80
ESEER	(1)(2)	kW/kW	4,11	4,10	4,10	4,11	4,11	4,10	4,11	4,12	4,12
Cooling energy class			C	B	B	B	C	C	B	B	C
ENERGY EFFICIENCY											
SEASONAL EFFICIENCY IN COOLING (Reg. EU 2016/2281)											
Ambient refrigeration											
Prated,c	(7)	kW	723	800	869	923	979	1018	1055	1142	1172
SEER	(7)(8)		4,16	4,17	4,17	4,17	4,18	4,15	4,18	4,18	4,18
Performance ηs	(7)(9)	%	163	164	164	164	164	163	164	164	164
EXCHANGERS											
HEAT EXCHANGER USER SIDE IN REFRIGERATION											
Water flow	(1)	l/s	34,69	38,39	41,70	44,31	46,98	48,82	50,65	54,81	56,25
Pressure drop	(1)	kPa	46,8	40,9	42,6	48,1	41,8	45,1	48,5	53,3	42,2
REFRIGERANT CIRCUIT											
Compressors nr.		N°	2	2	2	2	2	2	2	2	2
No. Circuits		N°	2	2	2	2	2	2	2	2	2
Refrigerant charge		kg	104	117	127	135	140	146	151	164	168
NOISE LEVEL											
Sound Pressure	(3)	dB(A)	69	69	70	70	71	71	71	71	72
Sound power level in cooling	(4)(5)	dB(A)	102	102	103	103	104	104	104	104	105
SIZE AND WEIGHT											
A	(6)	mm	6500	6500	7750	7750	7750	7750	9000	9000	9150
B	(6)	mm	2260	2260	2260	2260	2260	2260	2260	2260	2260
H	(6)	mm	2500	2500	2500	2500	2500	2500	2500	2500	2500
Operating weight	(6)	kg	6450	6940	7440	7560	7790	7820	8250	8370	8660

Notes:
1 Plant (side) cooling exchanger water (in/out) 12°C/7°C; Source (side) heat exchanger air (in) 35°C.
2 Values in compliance with EN14511-3:2013.
3 Average sound pressure level at 10m distance, unit in a free field on a reflective surface; non-binding value calculated from the sound power level.
4 Sound power on the basis of measurements made in compliance with ISO 9614.
5 Sound power level in cooling, outdoors.
6 Unit in standard configuration/execution, without optional accessories.
7 Seasonal energy efficiency of the cooling environment [REGULATION (EU) N. 2016/2281]
8 Seasonal space heating energy index
9 Seasonal energy efficiency of the space cooling
The units highlighted in this publication contain HFC R134a [GWP_{100} 1430] fluorinated greenhouse gases.

FX /K			6002	6022	6303	6903	7203	7213	7223
Power supply		V/ph/Hz	400/3/50	400/3/50	400/3/50	400/3/50	400/3/50	400/3/50	400/3/50
PERFORMANCE									
COOLING ONLY (GROSS VALUE)									
Cooling capacity	(1)	kW	1239	1303	1401	1481	1547	1654	1710
Total power input	(1)	kW	426	466	466	514	547	570	594
EER	(1)	kW/kW	2,91	2,80	3,00	2,88	2,83	2,90	2,88
ESEER	(1)	kW/kW	4,27	4,31	4,27	4,29	4,25	4,28	4,32
COOLING ONLY (EN14511 VALUE)									
Cooling capacity	(1)(2)	kW	1235	1298	1397	1476	1543	1649	1704
EER	(1)(2)	kW/kW	2,87	2,76	2,97	2,85	2,80	2,87	2,84
ESEER	(1)(2)	kW/kW	4,11	4,12	4,11	4,11	4,11	4,12	4,14
Cooling energy class			C	C	B	C	C	C	C
ENERGY EFFICIENCY									
SEASONAL EFFICIENCY IN COOLING (Reg. EU 2016/2281)									
Ambient refrigeration									
Prated,c	(7)	kW	1235	1298	1397	1476	1543	1649	1704
SEER	(7)(8)		4,17	4,17	4,21	4,19	4,18	4,21	4,21
Performance ηs	(7)(9)	%	164	164	166	165	164	165	166
EXCHANGERS									
HEAT EXCHANGER USER SIDE IN REFRIGERATION									
Water flow	(1)	l/s	59,26	62,29	67,01	70,81	74,00	79,11	81,79
Pressure drop	(1)	kPa	46,9	51,8	45,4	50,7	39,0	44,6	51,2
REFRIGERANT CIRCUIT									
Compressors nr.		N°	2	2	3	3	3	3	3
No. Circuits		N°	2	2	3	3	3	3	3
Refrigerant charge		kg	181	186	205	212	221	237	250
NOISE LEVEL									
Sound Pressure	(3)	dB(A)	73	73	73	73	73	73	73
Sound power level in cooling	(4)(5)	dB(A)	106	106	106	106	106	106	106
SIZE AND WEIGHT									
A	(6)	mm	10400	10400	11650	11650	11650	12900	12900
B	(6)	mm	2260	2260	2260	2260	2260	2260	2260
H	(6)	mm	2500	2500	2500	2500	2500	2500	2500
Operating weight	(6)	kg	9200	9310	11880	11940	11950	12490	12570

Notes:
1 Plant (side) cooling exchanger water (in/out) 12°C/7°C; Source (side) heat exchanger air (in) 35°C.
2 Values in compliance with EN14511-3:2013.
3 Average sound pressure level at 10m distance, unit in a free field on a reflective surface; non-binding value calculated from the sound power level.
4 Sound power on the basis of measurements made in compliance with ISO 9614.
5 Sound power level in cooling, outdoors.
6 Unit in standard configuration/execution, without optional accessories.
7 Seasonal energy efficiency of the cooling environment [REGULATION (EU) N. 2016/2281]
8 Seasonal space heating energy index
9 Seasonal energy efficiency of the space cooling
The units highlighted in this publication contain HFC R134a [GWP_{100} 1430] fluorinated greenhouse gases.
Certified data in EUROVENT

FX /SL-K			1502	1702	1902	1922	2202	2602	2652	2702	2722
Power supply		V/ph/Hz	400/3/50	400/3/50	400/3/50	400/3/50	400/3/50	400/3/50	400/3/50	400/3/50	400/3/50
PERFORMANCE											
COOLING ONLY (GROSS VALUE)											
Cooling capacity	(1)	kW	289	333	382	419	476	519	556	578	663
Total power input	(1)	kW	101	113	126	146	161	175	192	207	223
EER	(1)	kW/kW	2,85	2,95	3,03	2,87	2,95	2,97	2,90	2,79	2,98
ESEER	(1)	kW/kW	4,23	4,25	4,28	4,30	4,27	4,28	4,28	4,26	4,26
COOLING ONLY (EN14511 VALUE)											
Cooling capacity	(1)(2)	kW	288	332	380	417	475	517	554	577	661
EER	(1)(2)	kW/kW	2,82	2,92	3,00	2,83	2,92	2,93	2,87	2,76	2,94
ESEER	(1)(2)	kW/kW	4,10	4,11	4,13	4,13	4,13	4,12	4,13	4,11	4,11
Cooling energy class			C	B	B	C	B	B	C	C	B
ENERGY EFFICIENCY											
SEASONAL EFFICIENCY IN COOLING (Reg. EU 2016/2281)											
Ambient refrigeration											
Prated,c	(7)	kW	288	332	380	417	475	517	554	577	661
SEER	(7)(8)		4,10	4,13	4,18	4,16	4,17	4,12	4,14	4,14	4,17
Performance ηs	(7)(9)	%	161	162	164	163	164	162	162	163	164
EXCHANGERS											
HEAT EXCHANGER USER SIDE IN REFRIGERATION											
Water flow	(1)	l/s	13,80	15,94	18,25	20,02	22,76	24,80	26,59	27,66	31,72
Pressure drop	(1)	kPa	22,2	29,6	33,3	40,1	31,7	37,6	34,5	37,4	39,1
REFRIGERANT CIRCUIT											
Compressors nr.		N°	2	2	2	2	2	2	2	2	2
No. Circuits		N°	2	2	2	2	2	2	2	2	2
Refrigerant charge		kg	44,0	51,0	58,0	63,0	72,0	79,0	84,0	88,0	101
NOISE LEVEL											
Sound Pressure	(3)	dB(A)	55	55	56	56	57	57	57	57	57
Sound power level in cooling	(4)(5)	dB(A)	87	87	88	88	89	89	89	89	90
SIZE AND WEIGHT											
A	(6)	mm	2750	4000	4000	4000	5250	5250	5250	5250	6500
B	(6)	mm	2260	2260	2260	2260	2260	2260	2260	2260	2260
H	(6)	mm	2500	2500	2500	2500	2500	2500	2500	2500	2500
Operating weight	(6)	kg	3420	4160	4230	4230	5200	5560	5580	5620	6610

FX /SL-K			3152	3602	3902	4202	4502	4802	4812	4822	5412
Power supply		V/ph/Hz	400/3/50	400/3/50	400/3/50	400/3/50	400/3/50	400/3/50	400/3/50	400/3/50	400/3/50
PERFORMANCE											
COOLING ONLY (GROSS VALUE)											
Cooling capacity	(1)	kW	717	771	839	893	965	1021	1052	1137	1169
Total power input	(1)	kW	247	272	295	315	335	353	341	381	407
EER	(1)	kW/kW	2,90	2,84	2,85	2,83	2,88	2,89	3,09	2,99	2,87
ESEER	(1)	kW/kW	4,28	4,26	4,27	4,29	4,27	4,28	4,29	4,29	4,26
COOLING ONLY (EN14511 VALUE)											
Cooling capacity	(1)(2)	kW	714	769	836	890	962	1018	1048	1133	1166
EER	(1)(2)	kW/kW	2,87	2,81	2,82	2,80	2,84	2,85	3,04	2,94	2,84
ESEER	(1)(2)	kW/kW	4,10	4,11	4,12	4,12	4,12	4,11	4,11	4,11	4,11
Cooling energy class			C	C	C	C	C	C	B	B	C
ENERGY EFFICIENCY											
SEASONAL EFFICIENCY IN COOLING (Reg. EU 2016/2281)											
Ambient refrigeration											
Prated,c	(7)	kW	714	769	836	890	962	1018	1048	1133	1166
SEER	(7)(8)		4,16	4,18	4,18	4,16	4,18	4,18	4,20	4,19	4,20
Performance ηs	(7)(9)	%	163	164	164	164	164	164	165	165	165
EXCHANGERS											
HEAT EXCHANGER USER SIDE IN REFRIGERATION											
Water flow	(1)	l/s	34,27	36,86	40,11	42,70	46,14	48,85	50,30	54,38	55,91
Pressure drop	(1)	kPa	45,7	37,7	39,4	44,7	40,3	45,2	47,9	52,5	41,7
REFRIGERANT CIRCUIT											
Compressors nr.		N°	2	2	2	2	2	2	2	2	2
No. Circuits		N°	2	2	2	2	2	2	2	2	2
Refrigerant charge		kg	109	117	127	135	146	155	159	172	177
NOISE LEVEL											
Sound Pressure	(3)	dB(A)	58	58	59	59	60	60	61	61	61
Sound power level in cooling	(4)(5)	dB(A)	91	91	92	92	93	93	94	94	94
SIZE AND WEIGHT											
A	(6)	mm	6500	6500	7750	7750	9000	9000	10250	10250	10400
B	(6)	mm	2260	2260	2260	2260	2260	2260	2260	2260	2260
H	(6)	mm	2500	2500	2500	2500	2500	2500	2500	2500	2500
Operating weight	(6)	kg	7080	7550	8090	8200	9000	8870	9360	9470	9780

Notes:
1 Plant (side) cooling exchanger water (in/out) 12°C/7°C; Source (side) heat exchanger air (in) 35°C.
2 Values in compliance with EN14511-3:2013.
3 Average sound pressure level at 10m distance, unit in a free field on a reflective surface; non-binding value calculated from the sound power level.
4 Sound power on the basis of measurements made in compliance with ISO 9614.
5 Sound power level in cooling, outdoors.
6 Unit in standard configuration/execution, without optional accessories.
7 Seasonal energy efficiency of the cooling environment [REGULATION (EU) N. 2016/2281]
8 Seasonal space heating energy index
9 Seasonal energy efficiency of the space cooling
The units highlighted in this publication contain HFC R134a [GWP_{100} 1430] fluorinated greenhouse gases.

FX /SL-K			6002	6022	6303	6903	7203	7213	7223
Power supply		V/ph/Hz	400/3/50	400/3/50	400/3/50	400/3/50	400/3/50	400/3/50	400/3/50
PERFORMANCE									
COOLING ONLY (GROSS VALUE)									
Cooling capacity	(1)	kW	1194	1289	1350	1463	1530	1595	1649
Total power input	(1)	kW	433	459	474	510	540	583	609
EER	(1)	kW/kW	2,76	2,81	2,85	2,87	2,83	2,74	2,71
ESEER	(1)	kW/kW	4,26	4,30	4,27	4,29	4,25	4,25	4,27
COOLING ONLY (EN14511 VALUE)									
Cooling capacity	(1)(2)	kW	1190	1285	1346	1458	1526	1590	1644
EER	(1)(2)	kW/kW	2,73	2,77	2,81	2,83	2,80	2,71	2,67
ESEER	(1)(2)	kW/kW	4,10	4,12	4,11	4,11	4,11	4,11	4,10
Cooling energy class			C	C	C	C	C	C	D
ENERGY EFFICIENCY									
SEASONAL EFFICIENCY IN COOLING (Reg. EU 2016/2281)									
Ambient refrigeration									
Prated,c	(7)	kW	1190	1285	1346	1458	1526	1590	1644
SEER	(7)(8)		4,15	4,18	4,20	4,19	4,21	4,17	4,16
Performance ηs	(7)(9)	%	163	164	165	165	165	164	163
EXCHANGERS									
HEAT EXCHANGER USER SIDE IN REFRIGERATION									
Water flow	(1)	l/s	57,11	61,64	64,56	69,97	73,16	76,27	78,86
Pressure drop	(1)	kPa	43,5	50,7	42,1	49,5	38,2	41,5	47,6
REFRIGERANT CIRCUIT									
Compressors nr.		N°	2	2	3	3	3	3	3
No. Circuits		N°	2	2	3	3	3	3	3
Refrigerant charge		kg	181	195	205	222	232	242	250
NOISE LEVEL									
Sound Pressure	(3)	dB(A)	61	61	61	61	61	61	62
Sound power level in cooling	(4)(5)	dB(A)	94	94	94	94	94	94	95
SIZE AND WEIGHT									
A	(6)	mm	10400	11650	11650	12900	12900	12900	12900
B	(6)	mm	2260	2260	2260	2260	2260	2260	2260
H	(6)	mm	2500	2500	2500	2500	2500	2500	2500
Operating weight	(6)	kg	9860	10420	12810	13340	13340	13420	13500

Notes:
1 Plant (side) cooling exchanger water (in/out) 12°C/7°C; Source (side) heat exchanger air (in) 35°C.
2 Values in compliance with EN14511-3:2013.
3 Average sound pressure level at 10m distance, unit in a free field on a reflective surface; non-binding value calculated from the sound power level.
4 Sound power on the basis of measurements made in compliance with ISO 9614.
5 Sound power level in cooling, outdoors.
6 Unit in standard configuration/execution, without optional accessories.
7 Seasonal energy efficiency of the cooling environment [REGULATION (EU) N. 2016/2281]
8 Seasonal space heating energy index
9 Seasonal energy efficiency of the space cooling
The units highlighted in this publication contain HFC R134a [GWP_{100} 1430] fluorinated greenhouse gases.
Certified data in EUROVENT

FX /CA			1502	1702	1902	1922	2202	2602	2652
Power supply		V/ph/Hz	400/3/50	400/3/50	400/3/50	400/3/50	400/3/50	400/3/50	400/3/50
PERFORMANCE									
COOLING ONLY (GROSS VALUE)									
Cooling capacity	(1)	kW	302	350	395	462	513	551	591
Total power input	(1)	kW	95,4	109	125	144	160	175	184
EER	(1)	kW/kW	3,17	3,22	3,16	3,21	3,21	3,15	3,20
ESEER	(1)	kW/kW	4,38	4,39	4,40	4,37	4,40	4,39	4,40
COOLING ONLY (EN14511 VALUE)									
Cooling capacity	(1)(2)	kW	302	349	394	460	512	550	589
EER	(1)(2)	kW/kW	3,14	3,18	3,12	3,17	3,17	3,12	3,16
ESEER	(1)(2)	kW/kW	4,23	4,23	4,23	4,23	4,24	4,25	4,24
Cooling energy class			A	A	A	A	A	A	A
ENERGY EFFICIENCY									
SEASONAL EFFICIENCY IN COOLING (Reg. EU 2016/2281)									
Ambient refrigeration									
Prated,c	(7)	kW	302	349	394	460	512	550	589
SEER	(7)(8)		4,30	4,29	4,29	4,30	4,31	4,25	4,26
Performance ηs	(7)(9)	%	169	169	168	169	169	167	167
EXCHANGERS									
HEAT EXCHANGER USER SIDE IN REFRIGERATION									
Water flow	(1)	l/s	14,46	16,72	18,89	22,08	24,54	26,37	28,25
Pressure drop	(1)	kPa	24,4	32,6	35,7	29,8	36,8	34,0	39,0
REFRIGERANT CIRCUIT									
Compressors nr.		N°	2	2	2	2	2	2	2
No. Circuits		N°	2	2	2	2	2	2	2
Refrigerant charge		kg	48,0	54,0	58,0	68,0	79,0	81,0	87,0
NOISE LEVEL									
Sound Pressure	(3)	dB(A)	66	66	67	67	68	68	68
Sound power level in cooling	(4)(5)	dB(A)	98	98	99	99	100	100	101
SIZE AND WEIGHT									
A	(6)	mm	4000	4000	4000	5250	5250	5250	6500
B	(6)	mm	2260	2260	2260	2260	2260	2260	2260
H	(6)	mm	2500	2500	2500	2500	2500	2500	2500
Operating weight	(6)	kg	3660	3720	3760	4660	5040	5090	5830

FX /CA			2702	2722	3152	3602	3902	4202	4502
Power supply		V/ph/Hz	400/3/50	400/3/50	400/3/50	400/3/50	400/3/50	400/3/50	400/3/50
PERFORMANCE									
COOLING ONLY (GROSS VALUE)									
Cooling capacity	(1)	kW	629	684	766	838	905	956	1031
Total power input	(1)	kW	196	218	242	260	280	299	320
EER	(1)	kW/kW	3,21	3,14	3,17	3,22	3,24	3,19	3,22
ESEER	(1)	kW/kW	4,39	4,41	4,39	4,39	4,40	4,42	4,40
COOLING ONLY (EN14511 VALUE)									
Cooling capacity	(1)(2)	kW	627	682	764	835	902	952	1028
EER	(1)(2)	kW/kW	3,16	3,10	3,13	3,18	3,19	3,14	3,18
ESEER	(1)(2)	kW/kW	4,21	4,24	4,23	4,21	4,22	4,22	4,22
Cooling energy class			A	A	A	A	A	A	A
ENERGY EFFICIENCY									
SEASONAL EFFICIENCY IN COOLING (Reg. EU 2016/2281)									
Ambient refrigeration									
Prated,c	(7)	kW	627	682	764	835	902	952	1028
SEER	(7)(8)		4,28	4,30	4,33	4,30	4,32	4,31	4,31
Performance ηs	(7)(9)	%	168	169	170	169	170	169	169
EXCHANGERS									
HEAT EXCHANGER USER SIDE IN REFRIGERATION									
Water flow	(1)	l/s	30,07	32,70	36,64	40,06	43,26	45,72	49,29
Pressure drop	(1)	kPa	44,2	41,6	37,2	44,5	45,8	51,2	46,0
REFRIGERANT CIRCUIT									
Compressors nr.		N°	2	2	2	2	2	2	2
No. Circuits		N°	2	2	2	2	2	2	2
Refrigerant charge		kg	92,0	100	113	123	133	141	151
NOISE LEVEL									
Sound Pressure	(3)	dB(A)	68	68	68	69	69	70	70
Sound power level in cooling	(4)(5)	dB(A)	101	101	101	102	102	103	103
SIZE AND WEIGHT									
A	(6)	mm	6500	6500	7750	7750	9000	9000	10400
B	(6)	mm	2260	2260	2260	2260	2260	2260	2260
H	(6)	mm	2500	2500	2500	2500	2500	2500	2500
Operating weight	(6)	kg	5690	6110	6970	7440	7890	8000	8700

Notes:
1 Plant (side) cooling exchanger water (in/out) 12°C/7°C; Source (side) heat exchanger air (in) 35°C.
2 Values in compliance with EN14511-3:2013.
3 Average sound pressure level at 10m distance, unit in a free field on a reflective surface; non-binding value calculated from the sound power level.
4 Sound power on the basis of measurements made in compliance with ISO 9614.
5 Sound power level in cooling, outdoors.
6 Unit in standard configuration/execution, without optional accessories.
7 Seasonal energy efficiency of the cooling environment [REGULATION (EU) N. 2016/2281]
8 Seasonal space heating energy index
9 Seasonal energy efficiency of the space cooling
The units highlighted in this publication contain HFC R134a [GWP_{100} 1430] fluorinated greenhouse gases.

FX /CA			4802	4822	5412	5703	6303	6603
Power supply		V/ph/Hz	400/3/50	400/3/50	400/3/50	400/3/50	400/3/50	400/3/50
PERFORMANCE								
COOLING ONLY (GROSS VALUE)								
Cooling capacity	(1)	kW	1098	1177	1236	1342	1460	1521
Total power input	(1)	kW	339	375	391	414	459	485
EER	(1)	kW/kW	3,23	3,14	3,16	3,24	3,18	3,14
ESEER	(1)	kW/kW	4,43	4,40	4,41	4,35	4,37	4,39
COOLING ONLY (EN14511 VALUE)								
Cooling capacity	(1)(2)	kW	1094	1173	1232	1338	1456	1517
EER	(1)(2)	kW/kW	3,19	3,10	3,12	3,20	3,15	3,10
ESEER	(1)(2)	kW/kW	4,24	4,24	4,24	4,20	4,24	4,24
Cooling energy class			A	A	A	A	A	A
ENERGY EFFICIENCY								
SEASONAL EFFICIENCY IN COOLING (Reg. EU 2016/2281)								
Ambient refrigeration								
Prated,c	(7)	kW	1094	1173	1232	1338	1456	1517
SEER	(7)(8)		4,33	4,33	4,34	4,33	4,34	4,36
Performance ηs	(7)(9)	%	170	170	171	170	171	172
EXCHANGERS								
HEAT EXCHANGER USER SIDE IN REFRIGERATION								
Water flow	(1)	l/s	52,53	56,31	59,13	64,17	69,81	72,73
Pressure drop	(1)	kPa	50,1	42,3	46,7	41,6	34,7	37,7
REFRIGERANT CIRCUIT								
Compressors nr.		N°	2	2	2	3	3	3
No. Circuits		N°	2	2	2	3	3	3
Refrigerant charge		kg	161	173	182	197	226	224
NOISE LEVEL								
Sound Pressure	(3)	dB(A)	70	70	71	71	71	71
Sound power level in cooling	(4)(5)	dB(A)	103	103	104	104	104	104
SIZE AND WEIGHT								
A	(6)	mm	10400	10400	11650	12900	12900	12900
B	(6)	mm	2260	2260	2260	2260	2260	2260
H	(6)	mm	2500	2500	2500	2500	2500	2500
Operating weight	(6)	kg	8780	9040	10120	12160	12330	12640

Notes:
1 Plant (side) cooling exchanger water (in/out) 12°C/7°C; Source (side) heat exchanger air (in) 35°C.
2 Values in compliance with EN14511-3:2013.
3 Average sound pressure level at 10m distance, unit in a free field on a reflective surface; non-binding value calculated from the sound power level.
4 Sound power on the basis of measurements made in compliance with ISO 9614.
5 Sound power level in cooling, outdoors.
6 Unit in standard configuration/execution, without optional accessories.
7 Seasonal energy efficiency of the cooling environment [REGULATION (EU) N. 2016/2281]
8 Seasonal space heating energy index
9 Seasonal energy efficiency of the space cooling
The units highlighted in this publication contain HFC R134a [GWP_{100} 1430] fluorinated greenhouse gases.
Certified data in EUROVENT

FX /SL-CA			1502	1702	1902	1922	2202	2602	2652
Power supply		V/ph/Hz	400/3/50	400/3/50	400/3/50	400/3/50	400/3/50	400/3/50	400/3/50
PERFORMANCE									
COOLING ONLY (GROSS VALUE)									
Cooling capacity	(1)	kW	304	345	394	450	501	561	583
Total power input	(1)	kW	94,7	108	122	144	159	178	182
EER	(1)	kW/kW	3,21	3,20	3,24	3,13	3,14	3,14	3,21
ESEER	(1)	kW/kW	4,38	4,39	4,40	4,35	4,39	4,39	4,39
COOLING ONLY (EN14511 VALUE)									
Cooling capacity	(1)(2)	kW	303	344	393	449	499	559	581
EER	(1)(2)	kW/kW	3,18	3,16	3,20	3,10	3,10	3,11	3,17
ESEER	(1)(2)	kW/kW	4,24	4,23	4,24	4,22	4,24	4,24	4,22
Cooling energy class			A	A	A	A	A	A	A
ENERGY EFFICIENCY									
SEASONAL EFFICIENCY IN COOLING (Reg. EU 2016/2281)									
Ambient refrigeration									
Prated,c	(7)	kW	303	344	393	449	499	559	581
SEER	(7)(8)		4,31	4,29	4,28	4,28	4,31	4,30	4,25
Performance ηs	(7)(9)	%	169	169	168	168	169	169	167
EXCHANGERS									
HEAT EXCHANGER USER SIDE IN REFRIGERATION									
Water flow	(1)	l/s	14,55	16,49	18,85	21,53	23,94	26,81	27,87
Pressure drop	(1)	kPa	24,7	31,7	35,6	28,3	35,1	35,1	38,0
REFRIGERANT CIRCUIT									
Compressors nr.		N°	2	2	2	2	2	2	2
No. Circuits		N°	2	2	2	2	2	2	2
Refrigerant charge		kg	48,0	54,0	62,0	71,0	79,0	88,0	92,0
NOISE LEVEL									
Sound Pressure	(3)	dB(A)	55	56	56	57	57	57	58
Sound power level in cooling	(4)(5)	dB(A)	87	88	88	89	89	90	91
SIZE AND WEIGHT									
A	(6)	mm	4000	4000	5250	5250	5250	6500	6500
B	(6)	mm	2260	2260	2260	2260	2260	2260	2260
H	(6)	mm	2500	2500	2500	2500	2500	2500	2500
Operating weight	(6)	kg	4130	4190	4680	5140	5520	6140	6390

FX /SL-CA			2702	2722	3152	3602	3902	4202	4502
Power supply		V/ph/Hz	400/3/50	400/3/50	400/3/50	400/3/50	400/3/50	400/3/50	400/3/50
PERFORMANCE									
COOLING ONLY (GROSS VALUE)									
Cooling capacity	(1)	kW	616	681	754	819	899	948	1020
Total power input	(1)	kW	196	212	237	252	274	294	314
EER	(1)	kW/kW	3,14	3,21	3,18	3,25	3,28	3,23	3,25
ESEER	(1)	kW/kW	4,38	4,41	4,39	4,37	4,39	4,42	4,39
COOLING ONLY (EN14511 VALUE)									
Cooling capacity	(1)(2)	kW	614	678	752	817	896	944	1017
EER	(1)(2)	kW/kW	3,10	3,16	3,15	3,21	3,24	3,18	3,20
ESEER	(1)(2)	kW/kW	4,23	4,24	4,23	4,20	4,21	4,22	4,22
Cooling energy class			A	A	A	A	A	A	A
ENERGY EFFICIENCY									
SEASONAL EFFICIENCY IN COOLING (Reg. EU 2016/2281)									
Ambient refrigeration									
Prated,c	(7)	kW	614	678	752	817	896	944	1017
SEER	(7)(8)		4,30	4,32	4,34	4,30	4,31	4,32	4,33
Performance ηs	(7)(9)	%	169	170	170	169	169	170	170
EXCHANGERS									
HEAT EXCHANGER USER SIDE IN REFRIGERATION									
Water flow	(1)	l/s	29,44	32,55	36,06	39,18	43,00	45,33	48,80
Pressure drop	(1)	kPa	33,7	41,2	36,1	42,6	45,3	50,3	45,1
REFRIGERANT CIRCUIT									
Compressors nr.		N°	2	2	2	2	2	2	2
No. Circuits		N°	2	2	2	2	2	2	2
Refrigerant charge		kg	97,0	107	118	129	141	149	160
NOISE LEVEL									
Sound Pressure	(3)	dB(A)	58	59	59	59	59	60	60
Sound power level in cooling	(4)(5)	dB(A)	91	92	92	92	92	93	93
SIZE AND WEIGHT									
A	(6)	mm	6500	7750	7750	9000	10250	10250	11650
B	(6)	mm	2260	2260	2260	2260	2260	2260	2260
H	(6)	mm	2500	2500	2500	2500	2500	2500	2500
Operating weight	(6)	kg	6520	7150	7610	8500	8990	9280	9810

Notes:
1 Plant (side) cooling exchanger water (in/out) 12°C/7°C; Source (side) heat exchanger air (in) 35°C.
2 Values in compliance with EN14511-3:2013.
3 Average sound pressure level at 10m distance, unit in a free field on a reflective surface; non-binding value calculated from the sound power level.
4 Sound power on the basis of measurements made in compliance with ISO 9614.
5 Sound power level in cooling, outdoors.
6 Unit in standard configuration/execution, without optional accessories.
7 Seasonal energy efficiency of the cooling environment [REGULATION (EU) N. 2016/2281]
8 Seasonal space heating energy index
9 Seasonal energy efficiency of the space cooling
The units highlighted in this publication contain HFC R134a [GWP_{100} 1430] fluorinated greenhouse gases.

FX /SL-CA			4802	4822	5412	5703	6303
Power supply		V/ph/Hz	400/3/50	400/3/50	400/3/50	400/3/50	400/3/50
PERFORMANCE							
COOLING ONLY (GROSS VALUE)							
Cooling capacity	(1)	kW	1086	1163	1219	1310	1442
Total power input	(1)	kW	334	369	385	410	460
EER	(1)	kW/kW	3,25	3,15	3,16	3,20	3,13
ESEER	(1)	kW/kW	4,42	4,40	4,41	4,37	4,37
COOLING ONLY (EN14511 VALUE)							
Cooling capacity	(1)(2)	kW	1082	1160	1215	1306	1439
EER	(1)(2)	kW/kW	3,21	3,11	3,12	3,16	3,10
ESEER	(1)(2)	kW/kW	4,23	4,24	4,24	4,21	4,24
Cooling energy class			A	A	A	A	A
ENERGY EFFICIENCY							
SEASONAL EFFICIENCY IN COOLING (Reg. EU 2016/2281)							
Ambient refrigeration							
Prated,c	(7)	kW	1082	1160	1215	1306	1439
SEER	(7)(8)		4,34	4,34	4,35	4,34	4,34
Performance ηs	(7)(9)	%	170	171	171	171	171
EXCHANGERS							
HEAT EXCHANGER USER SIDE IN REFRIGERATION							
Water flow	(1)	l/s	51,94	55,63	58,31	62,64	68,95
Pressure drop	(1)	kPa	48,9	41,3	45,4	39,7	33,9
REFRIGERANT CIRCUIT							
Compressors nr.		N°	2	2	2	3	3
No. Circuits		N°	2	2	2	3	3
Refrigerant charge		kg	171	183	191	206	226
NOISE LEVEL							
Sound Pressure	(3)	dB(A)	60	60	62	62	62
Sound power level in cooling	(4)(5)	dB(A)	93	93	95	95	95
SIZE AND WEIGHT							
A	(6)	mm	11650	11650	12900	12900	12900
B	(6)	mm	2260	2260	2260	2260	2260
H	(6)	mm	2500	2500	2500	2500	2500
Operating weight	(6)	kg	9890	10230	10760	13130	13260

Notes:
1 Plant (side) cooling exchanger water (in/out) 12°C/7°C; Source (side) heat exchanger air (in) 35°C.
2 Values in compliance with EN14511-3:2013.
3 Average sound pressure level at 10m distance, unit in a free field on a reflective surface; non-binding value calculated from the sound power level.
4 Sound power on the basis of measurements made in compliance with ISO 9614.
5 Sound power level in cooling, outdoors.
6 Unit in standard configuration/execution, without optional accessories.
7 Seasonal energy efficiency of the cooling environment [REGULATION (EU) N. 2016/2281]
8 Seasonal space heating energy index
9 Seasonal energy efficiency of the space cooling
The units highlighted in this publication contain HFC R134a [GWP_{100} 1430] fluorinated greenhouse gases.
Certified data in EUROVENT

FX /E			1502	1702	1902	1922	2202	2602	2652	2702	2722
Power supply		V/ph/Hz	400/3/50	400/3/50	400/3/50	400/3/50	400/3/50	400/3/50	400/3/50	400/3/50	400/3/50
PERFORMANCE											
COOLING ONLY (GROSS VALUE)											
Cooling capacity	(1)	kW	317	363	414	451	531	576	613	650	703
Total power input	(1)	kW	94,6	108	123	137	156	171	181	192	213
EER	(1)	kW/kW	3,35	3,35	3,36	3,30	3,39	3,37	3,38	3,38	3,30
ESEER	(1)	kW/kW	4,43	4,45	4,44	4,46	4,44	4,45	4,45	4,47	4,45
COOLING ONLY (EN14511 VALUE)											
Cooling capacity	(1)(2)	kW	316	362	413	450	529	574	611	648	702
EER	(1)(2)	kW/kW	3,31	3,31	3,33	3,26	3,35	3,34	3,34	3,34	3,26
ESEER	(1)(2)	kW/kW	4,31	4,30	4,32	4,32	4,29	4,31	4,30	4,31	4,31
Cooling energy class			A	A	A	A	A	A	A	A	A
ENERGY EFFICIENCY											
SEASONAL EFFICIENCY IN COOLING (Reg. EU 2016/2281)											
Ambient refrigeration											
Prated,c	(7)	kW	316	362	413	450	529	574	611	648	702
SEER	(7)(8)		4,40	4,37	4,40	4,36	4,40	4,36	4,36	4,41	4,41
Performance ηs	(7)(9)	%	173	172	173	172	173	171	171	173	173
EXCHANGERS											
HEAT EXCHANGER USER SIDE IN REFRIGERATION											
Water flow	(1)	l/s	15,14	17,34	19,79	21,58	25,37	27,54	29,31	31,07	33,63
Pressure drop	(1)	kPa	22,9	30,1	24,0	28,5	35,8	29,5	33,4	37,5	31,4
REFRIGERANT CIRCUIT											
Compressors nr.		N°	2	2	2	2	2	2	2	2	2
No. Circuits		N°	2	2	2	2	2	2	2	2	2
Refrigerant charge		kg	49,0	56,0	64,0	71,0	82,0	89,0	95,0	101	109
NOISE LEVEL											
Sound Pressure	(3)	dB(A)	66	67	67	67	67	67	68	68	68
Sound power level in cooling	(4)(5)	dB(A)	98	99	99	99	100	100	101	101	101
SIZE AND WEIGHT											
A	(6)	mm	4000	5250	5250	5250	6500	6500	7750	7750	7750
B	(6)	mm	2260	2260	2260	2260	2260	2260	2260	2260	2260
H	(6)	mm	2500	2500	2500	2500	2500	2500	2500	2500	2500
Operating weight	(6)	kg	3720	4240	4360	4420	5590	5920	6400	6490	6600

FX /E			3152	3602	3902	4202	4502	4802	4822	5412
Power supply		V/ph/Hz	400/3/50	400/3/50	400/3/50	400/3/50	400/3/50	400/3/50	400/3/50	400/3/50
PERFORMANCE										
COOLING ONLY (GROSS VALUE)										
Cooling capacity	(1)	kW	786	854	931	987	1054	1123	1219	1277
Total power input	(1)	kW	236	256	277	298	317	337	373	391
EER	(1)	kW/kW	3,33	3,33	3,36	3,32	3,32	3,33	3,27	3,26
ESEER	(1)	kW/kW	4,44	4,46	4,51	4,46	4,49	4,48	4,41	4,43
COOLING ONLY (EN14511 VALUE)										
Cooling capacity	(1)(2)	kW	784	851	928	984	1051	1119	1216	1274
EER	(1)(2)	kW/kW	3,29	3,29	3,31	3,27	3,28	3,28	3,23	3,22
ESEER	(1)(2)	kW/kW	4,29	4,29	4,29	4,29	4,30	4,29	4,28	4,29
Cooling energy class			A	A	A	A	A	A	A	A
ENERGY EFFICIENCY										
SEASONAL EFFICIENCY IN COOLING (Reg. EU 2016/2281)										
Ambient refrigeration										
Prated,c	(7)	kW	784	851	928	984	1051	1119	1216	1274
SEER	(7)(8)		4,41	4,41	4,41	4,41	4,41	4,39	4,41	4,43
Performance ηs	(7)(9)	%	173	174	173	173	173	173	173	174
EXCHANGERS										
HEAT EXCHANGER USER SIDE IN REFRIGERATION										
Water flow	(1)	l/s	37,58	40,84	44,54	47,18	50,39	53,70	58,31	61,05
Pressure drop	(1)	kPa	34,6	40,9	53,0	42,1	46,1	51,2	34,4	37,7
REFRIGERANT CIRCUIT										
Compressors nr.		N°	2	2	2	2	2	2	2	2
No. Circuits		N°	2	2	2	2	2	2	2	2
Refrigerant charge		kg	122	132	144	153	163	174	189	198
NOISE LEVEL										
Sound Pressure	(3)	dB(A)	68	69	69	70	70	70	70	71
Sound power level in cooling	(4)(5)	dB(A)	101	102	102	103	103	103	103	104
SIZE AND WEIGHT										
A	(6)	mm	9000	9000	10250	10250	11650	11650	11650	12900
B	(6)	mm	2260	2260	2260	2260	2260	2260	2260	2260
H	(6)	mm	2500	2500	2500	2500	2500	2500	2500	2500
Operating weight	(6)	kg	7400	7880	8420	8660	9190	9270	10330	11170

Notes:
1 Plant (side) cooling exchanger water (in/out) 12°C/7°C; Source (side) heat exchanger air (in) 35°C.
2 Values in compliance with EN14511-3:2013.
3 Average sound pressure level at 10m distance, unit in a free field on a reflective surface; non-binding value calculated from the sound power level.
4 Sound power on the basis of measurements made in compliance with ISO 9614.
5 Sound power level in cooling, outdoors.
6 Unit in standard configuration/execution, without optional accessories.
7 Seasonal energy efficiency of the cooling environment [REGULATION (EU) N. 2016/2281]
8 Seasonal space heating energy index
9 Seasonal energy efficiency of the space cooling
The units highlighted in this publication contain HFC R134a [GWP_{100} 1430] fluorinated greenhouse gases.
Certified data in EUROVENT

FX /SL-E			1502	1702	1902	1922	2202	2602	2652	2702	2722
Power supply		V/ph/Hz	400/3/50	400/3/50	400/3/50	400/3/50	400/3/50	400/3/50	400/3/50	400/3/50	400/3/50
PERFORMANCE											
COOLING ONLY (GROSS VALUE)											
Cooling capacity	(1)	kW	313	359	409	447	524	568	605	642	697
Total power input	(1)	kW	93,2	106	121	136	154	169	179	190	212
EER	(1)	kW/kW	3,36	3,39	3,37	3,29	3,40	3,36	3,38	3,39	3,28
ESEER	(1)	kW/kW	4,45	4,47	4,45	4,46	4,45	4,46	4,47	4,49	4,47
COOLING ONLY (EN14511 VALUE)											
Cooling capacity	(1)(2)	kW	312	358	408	446	523	567	604	640	695
EER	(1)(2)	kW/kW	3,32	3,35	3,34	3,26	3,36	3,33	3,34	3,34	3,25
ESEER	(1)(2)	kW/kW	4,33	4,32	4,33	4,32	4,30	4,33	4,33	4,33	4,33
Cooling energy class			A	A	A	A	A	A	A	A	A
ENERGY EFFICIENCY											
SEASONAL EFFICIENCY IN COOLING (Reg. EU 2016/2281)											
Ambient refrigeration											
Prated,c	(7)	kW	312	358	408	446	523	567	604	640	695
SEER	(7)(8)		4,41	4,38	4,39	4,36	4,41	4,36	4,37	4,42	4,42
Performance ηs	(7)(9)	%	173	172	173	171	173	172	172	174	174
EXCHANGERS											
HEAT EXCHANGER USER SIDE IN REFRIGERATION											
Water flow	(1)	l/s	14,96	17,17	19,56	21,39	25,06	27,18	28,94	30,70	33,31
Pressure drop	(1)	kPa	22,4	29,5	23,4	28,0	34,9	28,7	32,6	36,6	30,8
REFRIGERANT CIRCUIT											
Compressors nr.		N°	2	2	2	2	2	2	2	2	2
No. Circuits		N°	2	2	2	2	2	2	2	2	2
Refrigerant charge		kg	49,0	56,0	64,0	71,0	82,0	89,0	95,0	101	109
NOISE LEVEL											
Sound Pressure	(3)	dB(A)	56	57	57	57	57	58	58	59	59
Sound power level in cooling	(4)(5)	dB(A)	88	89	89	89	90	91	91	92	92
SIZE AND WEIGHT											
A	(6)	mm	4000	5250	5250	5250	6500	6500	7750	7750	7750
B	(6)	mm	2260	2260	2260	2260	2260	2260	2260	2260	2260
H	(6)	mm	2500	2500	2500	2500	2500	2500	2500	2500	2500
Operating weight	(6)	kg	3960	4460	4620	4680	6120	6460	6940	7040	7140

FX /SL-E			3152	3602	3902	4202	4502	4802	4822	5412
Power supply		V/ph/Hz	400/3/50	400/3/50	400/3/50	400/3/50	400/3/50	400/3/50	400/3/50	400/3/50
PERFORMANCE										
COOLING ONLY (GROSS VALUE)										
Cooling capacity	(1)	kW	776	842	918	973	1040	1108	1205	1260
Total power input	(1)	kW	234	254	275	296	315	335	373	390
EER	(1)	kW/kW	3,31	3,32	3,34	3,29	3,30	3,31	3,23	3,23
ESEER	(1)	kW/kW	4,45	4,47	4,51	4,47	4,49	4,49	4,42	4,44
COOLING ONLY (EN14511 VALUE)										
Cooling capacity	(1)(2)	kW	774	839	915	971	1037	1104	1202	1257
EER	(1)(2)	kW/kW	3,27	3,28	3,29	3,25	3,25	3,26	3,19	3,20
ESEER	(1)(2)	kW/kW	4,31	4,30	4,30	4,31	4,32	4,29	4,29	4,30
Cooling energy class			A	A	A	A	A	A	A	A
ENERGY EFFICIENCY										
SEASONAL EFFICIENCY IN COOLING (Reg. EU 2016/2281)										
Ambient refrigeration										
Prated,c	(7)	kW	774	839	915	971	1037	1104	1202	1257
SEER	(7)(8)		4,41	4,41	4,42	4,41	4,42	4,40	4,41	4,44
Performance ηs	(7)(9)	%	173	174	174	174	174	173	173	175
EXCHANGERS										
HEAT EXCHANGER USER SIDE IN REFRIGERATION										
Water flow	(1)	l/s	37,11	40,26	43,92	46,55	49,72	52,98	57,62	60,28
Pressure drop	(1)	kPa	33,7	39,7	51,5	41,0	44,9	49,8	33,6	36,7
REFRIGERANT CIRCUIT										
Compressors nr.		N°	2	2	2	2	2	2	2	2
No. Circuits		N°	2	2	2	2	2	2	2	2
Refrigerant charge		kg	122	132	144	153	163	174	189	198
NOISE LEVEL										
Sound Pressure	(3)	dB(A)	59	59	59	60	60	60	60	62
Sound power level in cooling	(4)(5)	dB(A)	92	92	92	93	93	93	93	95
SIZE AND WEIGHT										
A	(6)	mm	9000	9000	10250	10250	11650	11650	11650	12900
B	(6)	mm	2260	2260	2260	2260	2260	2260	2260	2260
H	(6)	mm	2500	2500	2500	2500	2500	2500	2500	2500
Operating weight	(6)	kg	7990	8500	8990	9290	9830	9910	10900	11530

Notes:
1 Plant (side) cooling exchanger water (in/out) 12°C/7°C; Source (side) heat exchanger air (in) 35°C.
2 Values in compliance with EN14511-3:2013.
3 Average sound pressure level at 10m distance, unit in a free field on a reflective surface; non-binding value calculated from the sound power level.
4 Sound power on the basis of measurements made in compliance with ISO 9614.
5 Sound power level in cooling, outdoors.
6 Unit in standard configuration/execution, without optional accessories.
7 Seasonal energy efficiency of the cooling environment [REGULATION (EU) N. 2016/2281]
8 Seasonal space heating energy index
9 Seasonal energy efficiency of the space cooling
The units highlighted in this publication contain HFC R134a [GWP_{100} 1430] fluorinated greenhouse gases.
Certified data in EUROVENT

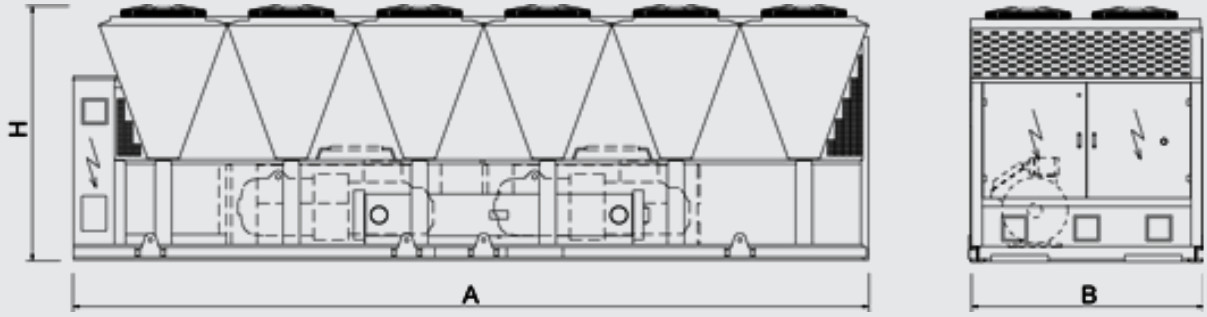
H
A
B

CHILLERS

FX HFO 1502 - 7823

Chiller, air source for outdoor installation
235-1463 kW



Outdoor unit for the production of chilled water with semi-hermetic screw compressors optimized for HFO refrigerant R1234ze, axial-flow fans, micro-channel full-aluminum condensing coils, single-pass shell and tubes evaporator designed by Mitsubishi Electric Hydronics & IT Cooling Systems S.p.A. and electronic expansion valve.
Base and supporting structure and panels are of galvanized epoxy powder coated steel with increased thickness. Eurovent certification.
Flexible and reliable unit; it easily adapts itself to different thermal load conditions thanks to the precise thermoregulation and the accurate sizing of all internal components. The compressors feature an enhanced lubrication system, an innovative internal geometry and a different control of capacity steps. Innovations that grant a remarkable performance improvement especially at partial loads.

Version

A	High efficiency
SL-A	Super low noise, high efficiency

Configurations

-	Basic function
D	Partial condensing heat recovery function

Features

HFO REFRIGERANT

4th generation refrigerant HFO 1234ze, with negligible greenhouse effect in comparison with traditional HFC refrigerants (Global Warming Potential GWP of HFO 1234ze < 1, GWP of R134a = 1300 as per IPCC rev. 5th) and zero impact on the ozone layer.

HIGH EFFICIENCY

Very high efficiency at full and partial load, at the highest market levels, thanks to the adopted technological solutions. These units ensure low operating costs and therefore a quick payback time.

EXTREMELY SILENT OPERATION

As the result of a systematic design oriented to minimize the noise level, the silenced version units give the best combination of quietness and efficiency on the market.

FLEXIBILITY

Flexibility in the applications thanks to the many configurations and versions available.

WIDE OPERATING RANGE

The accurate condensation control (variable fan speed regulation as per standard on every model) and devoted kits allow unit's operation from -10°C (-15°C with accessories) to 48°C (52°C with accessories) of outdoor air temperature and from -2°C to 18°C (20°C with accessories) of evaporator leaving water temperature.

ALUMINIUM MICRO-CHANNEL HEAT EXCHANGERS

The full aluminium micro-channel condenser coils deliver high efficiency whilst ensuring a reduced refrigerant volume and a lower unit weight. The e-coating protection (optional) grants the highest level of resistance to corrosion in any condition, even in the most aggressive environments.

INTEGRATED HYDRONIC GROUP

The built-in hydronic group (optional) includes the main water circuit components. The 2 pumps are in twin configuration and available with 2 or 4-pole motor, fixed or variable speed, high or low head to satisfy all the different industrial and comfort application requirements.

Accessory

- Noise reducer (only on not silenced versions)
- EC fans with electronic DC brushless motor
- Microchannel coils with e-coating protection
- Traditional coils with copper tubes and alluminium fins, also available with prepainted fins or Fin Guard Silver protective treatment.
- Compressor enclosure (standard on silenced versions)
- Leak detector
- Kit HT to increase the unit operating conditions range
- Compressor power factor correction
- Soft start
- Hydronic group
- VPF (Variable Primary Flow) system
- Set-up for remote connectivity with ModBus, Echelon, Bacnet, Bacnet over-IP.
- Remote control keyboard (distance to 200m and to 500m)

Controls

W3000TE

The W3000TE controller offers advanced functions and algorithms.
KIPlink - Keyboard In Your Pocket - is the innovative user interface based on WiFi technology that allows one to operate on the unit directly from the smartphone or tablet. Using KIPlink, it is possible to turn the unit on and off, adjust the set-point, plot the main operating variables, monitor in detail the status of the refrigerant circuits, the compressors, the fans and the pumps (if present) and display and reset the possible alarms. In addition to or as an alternative, the Touch interface, with a 7" WVGA colour display and a front USB port, or the Large keyboard, with a wide LCD display and led icons, are available. The temperature control is characterized by the continuous capacity modulation, based on PID algorithms with dynamic neutral zone related to the leaving water temperature. The diagnostics comprises a complete alarm management system, with the "black-box" (via PC) and the alarm history display (via user interface or also PC) for enhanced analysis of the unit operation.
Optional proprietary devices can perform the adjustment of the resources in systems made of several units. Consumption metering and performance measurement are possible as well. Supervision can be easily developed via proprietary devices or the integration in third party systems by means of the most common protocols as ModBus, Bacnet, Bacnet-over-IP, LonWorks. Compatibility with the remote keyboard (up to 8 units). The programmable timer manages a weekly schedule organized into time bands to optimise unit performance by minimising power consumption during periods of inactivity. Up to 10 daily time bands can be associated with different operating set points. As an option (VPF package), the modulation of capacity is integrated with the modulation of the water flow, by means of inverter and dedicated resources for the hydraulic circuit.

KIP LINK
Keyboard In your Pocket

FX HFO /A			1502	1702	1802	1922	2202	2602	2702	2722	3602
Power supply		V/ph/Hz	400/3/50	400/3/50	400/3/50	400/3/50	400/3/50	400/3/50	400/3/50	400/3/50	400/3/50
PERFORMANCE											
COOLING ONLY (GROSS VALUE)											
Cooling capacity	(1)	kW	238	270	293	340	377	415	483	533	632
Total power input	(1)	kW	74,0	85,0	92,0	104	118	132	153	168	199
EER	(1)	kW/kW	3,21	3,17	3,19	3,27	3,18	3,15	3,17	3,18	3,17
ESEER	(1)	kW/kW	4,31	4,27	4,34	4,25	4,27	4,36	4,30	4,34	4,31
COOLING ONLY (EN14511 VALUE)											
Cooling capacity	(1)(2)	kW	237	269	292	339	376	413	482	532	630
EER	(1)(2)	kW/kW	3,17	3,13	3,16	3,23	3,14	3,11	3,13	3,14	3,12
ESEER	(1)(2)	kW/kW	4,14	4,12	4,21	4,12	4,12	4,18	4,17	4,18	4,13
Cooling energy class			A	A	A	A	A	A	A	A	A
ENERGY EFFICIENCY											
SEASONAL EFFICIENCY IN COOLING (Reg. EU 2016/2281)											
Ambient refrigeration											
Prated,c	(7)	kW	237	269	292	339	376	413	482	532	630
SEER	(7)(8)		4,14	4,15	4,25	4,17	4,16	4,17	4,22	4,24	4,20
Performance ηs	(7)(9)	%	163	163	167	164	163	164	166	166	165
EXCHANGERS											
HEAT EXCHANGER USER SIDE IN REFRIGERATION											
Water flow	(1)	l/s	11,36	12,90	14,02	16,24	18,04	19,84	23,12	25,51	30,21
Pressure drop	(1)	kPa	33,0	31,4	20,7	27,8	34,3	41,5	29,7	36,2	44,6
REFRIGERANT CIRCUIT											
Compressors nr.		N°	2	2	2	2	2	2	2	2	2
No. Circuits		N°	2	2	2	2	2	2	2	2	2
Refrigerant charge		kg	43,0	47,0	51,0	58,0	63,0	70,0	81,0	86,0	108
NOISE LEVEL											
Sound Pressure	(3)	dB(A)	66	67	67	68	68	68	68	70	69
Sound power level in cooling	(4)(5)	dB(A)	98	99	99	100	100	100	100	102	102
SIZE AND WEIGHT											
A	(6)	mm	4000	4000	4000	4000	4000	5250	5250	5250	6500
B	(6)	mm	2260	2260	2260	2260	2260	2260	2260	2260	2260
H	(6)	mm	2500	2500	2500	2500	2500	2500	2500	2500	2500
Operating weight	(6)	kg	3640	3665	3740	3980	4610	5060	5120	5120	6760

FX HFO /A			4202	4802	4822	6002	6022	6603	7203	7223	7823
Power supply		V/ph/Hz	400/3/50	400/3/50	400/3/50	400/3/50	400/3/50	400/3/50	400/3/50	400/3/50	400/3/50
PERFORMANCE											
COOLING ONLY (GROSS VALUE)											
Cooling capacity	(1)	kW	727	840	900	984	1065	1152	1271	1384	1452
Total power input	(1)	kW	229	269	280	311	335	363	405	434	461
EER	(1)	kW/kW	3,17	3,13	3,22	3,16	3,18	3,17	3,14	3,19	3,15
ESEER	(1)	kW/kW	4,32	4,31	4,30	4,36	4,39	4,33	4,34	4,36	4,37
COOLING ONLY (EN14511 VALUE)											
Cooling capacity	(1)(2)	kW	724	838	897	981	1062	1149	1267	1379	1447
EER	(1)(2)	kW/kW	3,12	3,10	3,18	3,12	3,14	3,13	3,10	3,14	3,11
ESEER	(1)(2)	kW/kW	4,13	4,19	4,13	4,20	4,22	4,18	4,19	4,19	4,19
Cooling energy class			A	A	A	A	A	A	A	A	A
ENERGY EFFICIENCY											
SEASONAL EFFICIENCY IN COOLING (Reg. EU 2016/2281)											
Ambient refrigeration											
Prated,c	(7)	kW	724	838	897	981	1062	1149	1267	1379	1447
SEER	(7)(8)		4,23	4,29	4,24	4,29	4,31	4,27	4,25	4,30	4,30
Performance ηs	(7)(9)	%	166	169	167	169	169	168	167	169	169
EXCHANGERS											
HEAT EXCHANGER USER SIDE IN REFRIGERATION											
Water flow	(1)	l/s	34,77	40,19	43,05	47,05	50,95	55,11	60,78	66,17	69,44
Pressure drop	(1)	kPa	47,0	30,6	45,4	41,9	46,1	40,5	40,2	47,7	52,5
REFRIGERANT CIRCUIT											
Compressors nr.		N°	2	2	2	2	2	3	3	3	3
No. Circuits		N°	2	2	2	2	2	3	3	3	3
Refrigerant charge		kg	124	134	139	167	171	189	195	203	218
NOISE LEVEL											
Sound Pressure	(3)	dB(A)	70	71	71	73	73	73	73	73	73
Sound power level in cooling	(4)(5)	dB(A)	103	104	104	106	106	106	106	106	106
SIZE AND WEIGHT											
A	(6)	mm	7750	7750	9000	10400	10400	11650	11650	12900	12900
B	(6)	mm	2260	2260	2260	2260	2260	2260	2260	2260	2260
H	(6)	mm	2500	2500	2500	2500	2500	2500	2500	2500	2500
Operating weight	(6)	kg	7535	7820	8145	9040	9044	11932	11950	12600	12750

Notes:
1 Plant (side) cooling exchanger water (in/out) 12°C/7°C; Source (side) heat exchanger air (in) 35°C.
2 Values in compliance with EN14511-3:2013.
3 Average sound pressure level at 10m distance, unit in a free field on a reflective surface; non-binding value calculated from the sound power level.
4 Sound power on the basis of measurements made in compliance with ISO 9614.
5 Sound power level in cooling, outdoors.
6 Unit in standard configuration/execution, without optional accessories.
7 Seasonal energy efficiency of the cooling environment [REGULATION (EU) N. 2016/2281]
8 Seasonal space heating energy index
9 Seasonal energy efficiency of the space cooling
The units highlighted in this publication contain HFC HFO-1234ze [GWP_{100} 7] fluorinated greenhouse gases.
Certified data in EUROVENT

FX HFO /SL-A			1502	1702	1802	1922	2202	2602	2702	2722	3602
Power supply		V/ph/Hz	400/3/50	400/3/50	400/3/50	400/3/50	400/3/50	400/3/50	400/3/50	400/3/50	400/3/50
PERFORMANCE											
COOLING ONLY (GROSS VALUE)											
Cooling capacity	(1)	kW	235	266	289	337	372	415	477	528	623
Total power input	(1)	kW	72,7	84,1	91,3	103	118	129	152	168	198
EER	(1)	kW/kW	3,23	3,17	3,17	3,26	3,15	3,21	3,14	3,14	3,14
ESEER	(1)	kW/kW	4,33	4,29	4,34	4,28	4,27	4,40	4,31	4,36	4,31
COOLING ONLY (EN14511 VALUE)											
Cooling capacity	(1)(2)	kW	234	265	288	336	370	413	475	527	621
EER	(1)(2)	kW/kW	3,18	3,13	3,14	3,23	3,11	3,17	3,11	3,10	3,10
ESEER	(1)(2)	kW/kW	4,17	4,14	4,24	4,15	4,13	4,22	4,18	4,20	4,14
Cooling energy class			A	A	A	A	A	A	A	A	A
ENERGY EFFICIENCY											
SEASONAL EFFICIENCY IN COOLING (Reg. EU 2016/2281)											
Ambient refrigeration											
Prated,c	(7)	kW	234	265	288	336	370	413	475	527	621
SEER	(7)(8)		4,16	4,16	4,27	4,18	4,16	4,21	4,23	4,25	4,20
Performance ηs	(7)(9)	%	163	163	168	164	163	165	166	167	165
EXCHANGERS											
HEAT EXCHANGER USER SIDE IN REFRIGERATION											
Water flow	(1)	l/s	11,22	12,73	13,82	16,11	17,77	19,83	22,79	25,25	29,78
Pressure drop	(1)	kPa	32,2	30,6	20,1	27,4	33,3	41,5	28,9	35,5	43,3
REFRIGERANT CIRCUIT											
Compressors nr.		N°	2	2	2	2	2	2	2	2	2
No. Circuits		N°	2	2	2	2	2	2	2	2	2
Refrigerant charge		kg	43,0	47,0	51,0	58,0	63,0	73,0	81,0	86,0	108
NOISE LEVEL											
Sound Pressure	(3)	dB(A)	55	55	55	56	57	57	57	58	58
Sound power level in cooling	(4)(5)	dB(A)	87	87	87	88	89	89	89	90	91
SIZE AND WEIGHT											
A	(6)	mm	4000	4000	4000	4000	4000	5250	5250	5250	6500
B	(6)	mm	2260	2260	2260	2260	2260	2260	2260	2260	2260
H	(6)	mm	2500	2500	2500	2500	2500	2500	2500	2500	2500
Operating weight	(6)	kg	3640	3665	3740	3980	4610	5050	5120	5120	6760

FX HFO /SL-A			4202	4802	4822	6002	6022	6603	7203	7223	7823
Power supply		V/ph/Hz	400/3/50	400/3/50	400/3/50	400/3/50	400/3/50	400/3/50	400/3/50	400/3/50	400/3/50
PERFORMANCE											
COOLING ONLY (GROSS VALUE)											
Cooling capacity	(1)	kW	718	831	892	971	1054	1137	1261	1379	1463
Total power input	(1)	kW	228	258	280	310	335	363	400	431	467
EER	(1)	kW/kW	3,14	3,22	3,18	3,14	3,15	3,13	3,15	3,20	3,13
ESEER	(1)	kW/kW	4,33	4,31	4,31	4,36	4,41	4,33	4,37	4,42	4,42
COOLING ONLY (EN14511 VALUE)											
Cooling capacity	(1)(2)	kW	715	829	889	968	1051	1134	1257	1375	1460
EER	(1)(2)	kW/kW	3,10	3,18	3,14	3,10	3,10	3,10	3,11	3,16	3,11
ESEER	(1)(2)	kW/kW	4,15	4,16	4,15	4,21	4,23	4,19	4,22	4,24	4,29
Cooling energy class			A	A	A	A	A	A	A	A	A
ENERGY EFFICIENCY											
SEASONAL EFFICIENCY IN COOLING (Reg. EU 2016/2281)											
Ambient refrigeration											
Prated,c	(7)	kW	715	829	889	968	1051	1134	1257	1375	1460
SEER	(7)(8)		4,23	4,26	4,25	4,29	4,32	4,27	4,27	4,35	4,44
Performance ηs	(7)(9)	%	166	167	167	169	170	168	168	171	175
EXCHANGERS											
HEAT EXCHANGER USER SIDE IN REFRIGERATION											
Water flow	(1)	l/s	34,33	39,74	42,66	46,44	50,42	54,36	60,32	65,92	69,95
Pressure drop	(1)	kPa	45,8	38,7	44,6	40,8	45,1	39,4	39,6	47,3	31,1
REFRIGERANT CIRCUIT											
Compressors nr.		N°	2	2	2	2	2	3	3	3	3
No. Circuits		N°	2	2	2	2	2	3	3	3	3
Refrigerant charge		kg	124	134	139	167	171	189	204	213	223
NOISE LEVEL											
Sound Pressure	(3)	dB(A)	59	60	61	61	61	61	61	62	62
Sound power level in cooling	(4)(5)	dB(A)	92	93	94	94	94	94	94	95	95
SIZE AND WEIGHT											
A	(6)	mm	7750	9000	9000	10400	10400	11650	12900	12900	12900
B	(6)	mm	2260	2260	2260	2260	2260	2260	2260	2260	2260
H	(6)	mm	2500	2500	2500	2500	2500	2500	2500	2500	2500
Operating weight	(6)	kg	7535	8100	8145	9040	9044	11932	12500	12700	12800

Notes:
1 Plant (side) cooling exchanger water (in/out) 12°C/7°C; Source (side) heat exchanger air (in) 35°C.
2 Values in compliance with EN14511-3:2013.
3 Average sound pressure level at 10m distance, unit in a free field on a reflective surface; non-binding value calculated from the sound power level.
4 Sound power on the basis of measurements made in compliance with ISO 9614.
5 Sound power level in cooling, outdoors.
6 Unit in standard configuration/execution, without optional accessories.
7 Seasonal energy efficiency of the cooling environment [REGULATION (EU) N. 2016/2281]
8 Seasonal space heating energy index
9 Seasonal energy efficiency of the space cooling
The units highlighted in this publication contain HFC HFO-1234ze [GWP_{100} 7] fluorinated greenhouse gases.
Certified data in EUROVENT

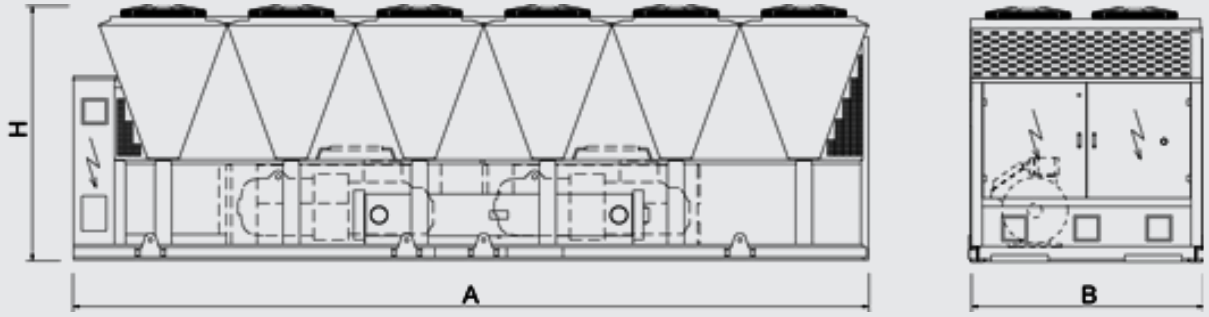
H
A
B

CHILLERS

i-FX (1+i) 2602 - 5403

High efficiency chiller, air source for outdoor installation
567-1273 kW



Outdoor unit for the production of chilled water with fixed speed and variable speed (Inverter Driven) screw compressors optimized for R134a, axial-flow fans, condensing coil with copper tubes and aluminium fins, shell and tube single pass evaporator designed by Climaveneta and electronic expansion valve.
Eurovent certification for all the sizes.
Base and supporting structure and panels are of galvanized epoxy powder coated steel.
Flexible and reliable unit; it easily adapts itself to different thermal load conditions thanks to the precise temperature control together with the use of inverter technology. The high performance's level, both full and partial load, is achieved thanks to the accurate unit's design and to the use of fixed speed motor together with variable speed (inverter) motor.

Version

CA	Class A of efficiency
SL	Super-low noise version

Configurations

-	Basic function
D	Partial condensing heat recovery function
R	Total condensing heat recovery function

Features

WIDE RANGE
Extended capacity range.
HIGH EFFICIENCY
Unit with high efficiency and reduced energy consumption, thanks to the inverter technology, contributing to lower operating costs and therefore achieving a quick return on investment.
EXTREMELY SILENT OPERATION
Extremely silent operation together with high efficiency, tank to dedicated acoustic devices and a precise design for the choice of the components.
GREEN RELEVANT PRODUCT
These units comply with the minimum efficiency requirements of air cooled chillers defined in ASHRAE 90.1-2013 "Energy Standard for buildings except LowRise Residential Building", included the higher values required from January 2015.

Accessory

- Hydronic group
- VPF (Variable Primary Flow) kit: variable flow pumps with on board regulation
- Noise reducer (only on not silenced versions)
- EC fans with electronic DC brushless motor
- Axial fans with External Static Pressure (ESP) up to 130 Pa.
- Remote control keyboard (distance to 200m and to 500m)
- Set-up for remote connectivity with ModBus/Echelon protocol cards

Controls

W3000TE
The brand new W3000TE controller offers advanced functions and algorithms. The large format keyboard and the wide LCD display favour an easy and safe access to the machine setup and a complete view of unit's staus. The assessment and intervention on the unit is managed through a multi-level menu, with selectable user's language. The led icons immediately show the operating status of the circuits, as well as of the fans and of the water pumps (if present). An optional extra is the touch screen interface: 7.0" WVGA colour display with adjustable LED backlight and front USB port. The touch screen technology allows intuitive navigation between the various screens, safe access to the data with a three-level password protection as well as the graphic display of the performance of some monitored measurements.
The diagnostics comprises a complete alarm management system, with "black box" (via PC) and alarm log functions (via display or also PC) for a better analysis of the unit performance.
For the systems made of several units, the adjustment of the resources is performed by optional proprietary devices.
Consumption metering and performance measurement are possible as well. Supervision can be easily developed via proprietary devices or the integration in third party systems by means of the most common protocols as ModBus, Bacnet-over-IP, Echelon LonWorks, Bacnet MS/TP protocols.
Compatibility with the remote keyboard managing up to 8 units.
The presence of the programmable timer allows the creation of an operating profile containing up to 4 typical days and 10 time bands.
The control is characterized by the continuous modulation of the unit capacity, based on PID algorithms and referring to the water delivery temperature.
Optionally (VPF package), capacity modulation can be integrated with hydraulic flow modulation, thanks to inverter-driven pumps and to specific resources for the hydraulic circuit.



i-FX (1+i) /CA			2602	2662	2722	3152	3602
Power supply		V/ph/Hz	400/3/50	400/3/50	400/3/50	400/3/50	400/3/50
PERFORMANCE							
COOLING ONLY (GROSS VALUE)							
Cooling capacity	(1)	kW	567	631	700	785	858
Total power input	(1)	kW	181	201	224	249	273
EER	(1)	kW/kW	3,13	3,14	3,13	3,15	3,14
ESEER	(1)	kW/kW	4,81	4,81	4,78	4,79	4,84
COOLING ONLY (EN14511 VALUE)							
Cooling capacity	(1)(2)	kW	566	629	698	783	855
EER	(1)(2)	kW/kW	3,10	3,10	3,10	3,12	3,10
ESEER	(1)(2)	kW/kW	4,62	4,62	4,62	4,61	4,63
Cooling energy class			A	A	A	A	A
ENERGY EFFICIENCY							
SEASONAL EFFICIENCY IN COOLING (Reg. EU 2016/2281)							
Ambient refrigeration							
Prated,c	(7)	kW	566	629	698	783	855
SEER	(7)(8)		4,72	4,73	4,77	4,76	4,77
Performance ηs	(7)(9)	%	186	186	188	187	188
EXCHANGERS							
HEAT EXCHANGER USER SIDE IN REFRIGERATION							
Water flow	(1)	l/s	27,14	30,17	33,48	37,55	41,03
Pressure drop	(1)	kPa	36,0	35,4	31,1	34,5	41,2
REFRIGERANT CIRCUIT							
Compressors nr.		N°	2	2	2	2	2
No. Circuits		N°	2	2	2	2	2
Refrigerant charge		kg	115	180	190	200	200
NOISE LEVEL							
Sound Pressure	(3)	dB(A)	67	68	68	68	69
Sound power level in cooling	(4)(5)	dB(A)	100	101	101	101	102
SIZE AND WEIGHT							
A	(6)	mm	7000	7900	7900	7900	9860
B	(6)	mm	2260	2260	2260	2260	2260
H	(6)	mm	2530	2530	2530	2530	2530
Operating weight	(6)	kg	6130	7170	7460	7970	9110

i-FX (1+i) /CA			3902	4212	4513	4953	5403
Power supply		V/ph/Hz	400/3/50	400/3/50	400/3/50	400/3/50	400/3/50
PERFORMANCE							
COOLING ONLY (GROSS VALUE)							
Cooling capacity	(1)	kW	951	1045	1127	1196	1273
Total power input	(1)	kW	302	333	359	380	405
EER	(1)	kW/kW	3,15	3,14	3,14	3,15	3,14
ESEER	(1)	kW/kW	4,79	4,82	4,84	4,79	4,82
COOLING ONLY (EN14511 VALUE)							
Cooling capacity	(1)(2)	kW	949	1042	1123	1192	1269
EER	(1)(2)	kW/kW	3,11	3,10	3,10	3,11	3,10
ESEER	(1)(2)	kW/kW	4,61	4,61	4,60	4,60	4,60
Cooling energy class			A	A	A	A	A
ENERGY EFFICIENCY							
SEASONAL EFFICIENCY IN COOLING (Reg. EU 2016/2281)							
Ambient refrigeration							
Prated,c	(7)	kW	949	1042	1123	1192	1269
SEER	(7)(8)		4,82	4,77	4,74	4,73	4,75
Performance ηs	(7)(9)	%	190	188	187	186	187
EXCHANGERS							
HEAT EXCHANGER USER SIDE IN REFRIGERATION							
Water flow	(1)	l/s	45,49	49,96	53,90	57,18	60,88
Pressure drop	(1)	kPa	36,7	44,3	51,6	43,6	49,5
REFRIGERANT CIRCUIT							
Compressors nr.		N°	2	2	3	3	3
No. Circuits		N°	2	2	3	3	3
Refrigerant charge		kg	210	220	255	245	255
NOISE LEVEL							
Sound Pressure	(3)	dB(A)	70	71	72	72	72
Sound power level in cooling	(4)(5)	dB(A)	103	104	105	105	105
SIZE AND WEIGHT							
A	(6)	mm	10790	11720	12630	12630	12630
B	(6)	mm	2260	2260	2260	2260	2260
H	(6)	mm	2530	2530	2530	2530	2530
Operating weight	(6)	kg	10080	10140	11640	12570	12950

Notes:
1 Plant (side) cooling exchanger water (in/out) 12°C/7°C; Source (side) heat exchanger air (in) 35°C.
2 Values in compliance with EN14511-3:2013.
3 Average sound pressure level at 10m distance, unit in a free field on a reflective surface; non-binding value calculated from the sound power level.
4 Sound power on the basis of measurements made in compliance with ISO 9614.
5 Sound power level in cooling, outdoors.
6 Unit in standard configuration/execution, without optional accessories.
7 Seasonal energy efficiency of the cooling environment [REGULATION (EU) N. 2016/2281]
8 Seasonal space heating energy index
9 Seasonal energy efficiency of the space cooling
The units highlighted in this publication contain HFC R134a [GWP_{100} 1430] fluorinated greenhouse gases.
Certified data in EUROVENT

i-FX (1+i) /SL			2602	2662	2722	3152	3903
Power supply		V/ph/Hz	400/3/50	400/3/50	400/3/50	400/3/50	400/3/50
PERFORMANCE							
COOLING ONLY (GROSS VALUE)							
Cooling capacity	(1)	kW	544	611	679	752	805
Total power input	(1)	kW	181	201	222	249	268
EER	(1)	kW/kW	3,01	3,04	3,06	3,03	3,01
ESEER	(1)	kW/kW	4,91	4,90	4,87	4,92	4,87
COOLING ONLY (EN14511 VALUE)							
Cooling capacity	(1)(2)	kW	542	610	677	750	802
EER	(1)(2)	kW/kW	2,98	3,01	3,03	3,00	2,97
ESEER	(1)(2)	kW/kW	4,72	4,72	4,71	4,74	4,68
Cooling energy class			B	B	B	B	B
ENERGY EFFICIENCY							
SEASONAL EFFICIENCY IN COOLING (Reg. EU 2016/2281)							
Ambient refrigeration							
Prated,c	(7)	kW	542	610	677	750	802
SEER	(7)(8)		4,84	4,85	4,86	4,88	4,81
Performance ηs	(7)(9)	%	190	191	192	192	189
EXCHANGERS							
HEAT EXCHANGER USER SIDE IN REFRIGERATION							
Water flow	(1)	l/s	26,00	29,22	32,46	35,97	38,48
Pressure drop	(1)	kPa	33,0	33,2	29,2	31,7	36,3
REFRIGERANT CIRCUIT							
Compressors nr.		N°	2	2	2	2	3
No. Circuits		N°	2	2	2	2	3
Refrigerant charge		kg	115	180	190	200	200
NOISE LEVEL							
Sound Pressure	(3)	dB(A)	58	59	60	60	60
Sound power level in cooling	(4)(5)	dB(A)	91	92	93	93	93
SIZE AND WEIGHT							
A	(6)	mm	7000	7900	7900	7900	9900
B	(6)	mm	2260	2260	2260	2260	2260
H	(6)	mm	2530	2530	2530	2530	2530
Operating weight	(6)	kg	6410	7400	7690	8370	9570

i-FX (1+i) /SL			3953	4013	4063	4953	5403
Power supply		V/ph/Hz	400/3/50	400/3/50	400/3/50	400/3/50	400/3/50
PERFORMANCE							
COOLING ONLY (GROSS VALUE)							
Cooling capacity	(1)	kW	880	946	1018	1143	1209
Total power input	(1)	kW	295	311	335	380	411
EER	(1)	kW/kW	2,98	3,04	3,04	3,01	2,94
ESEER	(1)	kW/kW	4,86	4,89	4,91	4,90	4,91
COOLING ONLY (EN14511 VALUE)							
Cooling capacity	(1)(2)	kW	878	944	1015	1140	1205
EER	(1)(2)	kW/kW	2,95	3,01	3,00	2,97	2,90
ESEER	(1)(2)	kW/kW	4,69	4,70	4,70	4,71	4,69
Cooling energy class			B	B	B	B	B
ENERGY EFFICIENCY							
SEASONAL EFFICIENCY IN COOLING (Reg. EU 2016/2281)							
Ambient refrigeration							
Prated,c	(7)	kW	878	944	1015	1140	1205
SEER	(7)(8)		4,83	4,84	4,80	4,81	4,78
Performance ηs	(7)(9)	%	190	191	189	190	188
EXCHANGERS							
HEAT EXCHANGER USER SIDE IN REFRIGERATION							
Water flow	(1)	l/s	42,09	45,25	48,67	54,66	57,83
Pressure drop	(1)	kPa	31,5	36,4	42,1	39,9	44,6
REFRIGERANT CIRCUIT							
Compressors nr.		N°	3	3	3	3	3
No. Circuits		N°	3	3	3	3	3
Refrigerant charge		kg	200	210	220	255	255
NOISE LEVEL							
Sound Pressure	(3)	dB(A)	60	60	61	61	64
Sound power level in cooling	(4)(5)	dB(A)	93	93	94	94	97
SIZE AND WEIGHT							
A	(6)	mm	10800	10800	11700	11700	12630
B	(6)	mm	2260	2260	2260	2260	2260
H	(6)	mm	2530	2530	2530	2530	2530
Operating weight	(6)	kg	10080	10650	11090	12600	13530

Notes:
1 Plant (side) cooling exchanger water (in/out) 12°C/7°C; Source (side) heat exchanger air (in) 35°C.
2 Values in compliance with EN14511-3:2013.
3 Average sound pressure level at 10m distance, unit in a free field on a reflective surface; non-binding value calculated from the sound power level.
4 Sound power on the basis of measurements made in compliance with ISO 9614.
5 Sound power level in cooling, outdoors.
6 Unit in standard configuration/execution, without optional accessories.
7 Seasonal energy efficiency of the cooling environment [REGULATION (EU) N. 2016/2281]
8 Seasonal space heating energy index
9 Seasonal energy efficiency of the space cooling
The units highlighted in this publication contain HFC R134a [GWP_{100} 1430] fluorinated greenhouse gases.
Certified data in EUROVENT

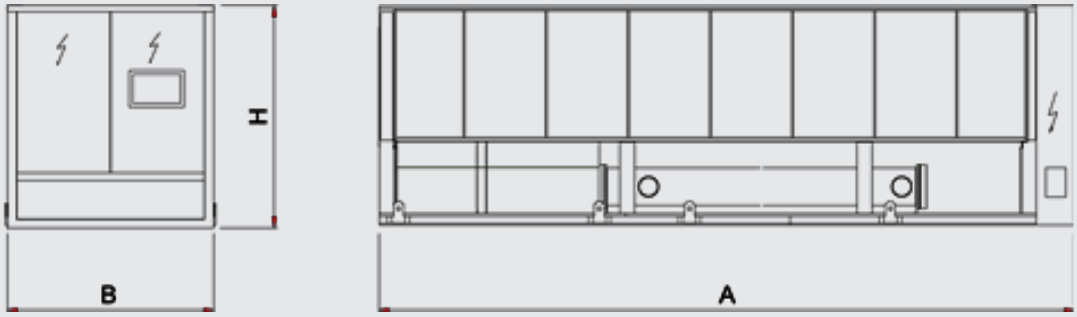
H
B
A

CHILLERS

TECS2 0211 - 1154

High efficiency chiller, air source for outdoor installation 220-1324 kW



Outdoor unit for the production of chilled water featuring oil-free centrifugal compressor, with R134a, axial-flow fans, condensing coil with copper tubes and aluminium fins, shell and tube flooded evaporator and electronic regulation valve. Base and supporting structure and panels are of galvanized epoxy powder coated steel with increased thickness. Flexible and reliable unit; it easily adapts itself to different thermal load conditions thanks to the precise thermoregulation together with the use of inverter technology. The compressor is radically innovative: magnetic bearings and digital rotor speed control allow partial load efficiency levels to be reached that were hither to impossible.

Version

SL-CA	Super Low noise version, Class A of efficiency
XL-CA	eXtra Low noise version, Class A of efficiency
SL-CA-E	Super Low noise version, Premium efficiency, Class A enhanced

Configurations

-	Basic function
D	Partial condensing heat recovery function

Features

VERY HIGH EFFICIENCY

Very high efficiency at full and partial load, to top market levels, thanks to adopted technological solutions: large capacity modulation and expanded exchanger, offering minimum running costs of the unit in real working conditions.

VERSION ´CA-E´ AVAILABLE

The version ´CA-E´ is characterized by efficiency beyond the ´Class A´ for Eurovent. The technological choices adopted assure the minimization of operating costs and therefore a quick payback time.

EXTREMELY SILENT OPERATION

As result of a sistematic design oriented to minimize the noise level, XL version´s units give the best compromise between silence and efficiency on the market.

LOW INRUSH CURRENTS

Reduced breakaway starting currents thanks to the revolutionary centrifugal compressor.

Accessory

- VPF (Variable Primary Flow) kit: variable flow pumps with on board regulation
- Hydronic group
- EC fans with electronic DC brushless motor
- Set-up for remote connectivity with ModBus/Echelon protocol cards

Controls

Electronic control W3000 TE

The brand new W3000TE controller offers advanced functions and algorithms. The large format keyboard and the wide LCD display favour an easy and safe access to the machine setup and a complete view of unit's staus. The assessment and intervention on the unit is managed through a multi-level menu, with selectable user's language. The led icons immediately show the operating status of the circuits, as well as of the fans and of the water pumps (if present). An optional extra is the touch screen interface: 7.0" WVGA colour display with adjustable LED backlight and front USB port. The touch screen technology allows intuitive navigation between the various screens, safe access to the data with a three-level password protection as well as the graphic display of the performance of some monitored measurements.

The diagnostics comprises a complete alarm management system, with "black box" (via PC) and alarm log functions (via display or also PC) for a better analysis of the unit performance.

For the systems made of several units, the adjustment of the resources is performed by optional proprietary devices.

Consumption metering and performance measurement are possible as well. Supervision can be easily developed via proprietary devices or the integration in third party systems by means of the most common protocols as ModBus, Bacnet-over-IP, Echelon LonWorks, Bacnet MS/TP protocols.

Compatibility with the remote keyboard managing up to 8 units.

The presence of the programmable timer allows the creation of an operating profile containing up to 4 typical days and 10 time bands.

The control is characterized by the continuous modulation of the unit capacity, based on PID algorithms and referring to the water delivery temperature.

Optionally (VPF package), capacity modulation can be integrated with hydraulic flow modulation, thanks to inverter-driven pumps and to specific resources for the hydraulic circuit.



TECS2 / SL-CA			0211	0251	0351	0452	0512	0552	0652
Power supply		V/ph/Hz	400/3/50	400/3/50	400/3/50	400/3/50	400/3/50	400/3/50	400/3/50
PERFORMANCE									
COOLING ONLY (GROSS VALUE)									
Cooling capacity	(1)	kW	233	258	346	442	509	574	650
Total power input	(1)	kW	70,5	81,1	110	138	161	174	208
EER	(1)	kW/kW	3,30	3,18	3,13	3,20	3,16	3,30	3,13
ESEER	(1)	kW/kW	4,77	4,87	4,72	5,07	5,17	5,09	5,04
COOLING ONLY (EN14511 VALUE)									
Cooling capacity	(1)(2)	kW	232	257	345	441	507	572	648
EER	(1)(2)	kW/kW	3,25	3,14	3,10	3,16	3,13	3,26	3,11
ESEER	(1)(2)	kW/kW	4,61	4,73	4,57	4,88	4,97	4,87	4,89
Cooling energy class			A	A	A	A	A	A	A
ENERGY EFFICIENCY									
SEASONAL EFFICIENCY IN COOLING (Reg. EU 2016/2281)									
Ambient refrigeration									
Prated,c	(7)	kW	232	257	345	441	507	572	648
SEER	(7)(8)		4,82	4,93	4,88	5,08	5,21	5,07	5,14
Performance ηs	(7)(9)	%	190	194	192	200	205	200	203
EXCHANGERS									
HEAT EXCHANGER USER SIDE IN REFRIGERATION									
Water flow	(1)	l/s	11,13	12,33	16,53	21,15	24,32	27,43	31,07
Pressure drop	(1)	kPa	36,4	27,4	28,5	27,6	27,7	35,2	21,1
REFRIGERANT CIRCUIT									
Compressors nr.		N°	1	1	1	2	2	2	2
No. Circuits		N°	1	1	1	1	1	1	1
Refrigerant charge		kg	100	100	120	210	180	210	240
NOISE LEVEL									
Sound Pressure	(3)	dB(A)	56	56	58	58	58	59	59
Sound power level in cooling	(4)(5)	dB(A)	88	88	90	90	90	91	92
SIZE AND WEIGHT									
A	(6)	mm	3100	3100	4000	4900	4900	5800	7000
B	(6)	mm	2260	2260	2260	2260	2260	2260	2260
H	(6)	mm	2430	2430	2430	2430	2430	2430	2430
Operating weight	(6)	kg	2320	2370	3050	4000	4240	4530	5800

TECS2 / SL-CA			0712	0853	0913	1013	1054	1154
Power supply		V/ph/Hz	400/3/50	400/3/50	400/3/50	400/3/50	400/3/50	400/3/50
PERFORMANCE								
COOLING ONLY (GROSS VALUE)								
Cooling capacity	(1)	kW	742	848	903	977	1065	1183
Total power input	(1)	kW	225	269	286	310	336	374
EER	(1)	kW/kW	3,30	3,15	3,15	3,15	3,17	3,17
ESEER	(1)	kW/kW	5,16	5,12	5,13	5,09	5,06	5,14
COOLING ONLY (EN14511 VALUE)								
Cooling capacity	(1)(2)	kW	740	846	901	975	1062	1180
EER	(1)(2)	kW/kW	3,26	3,12	3,12	3,12	3,13	3,13
ESEER	(1)(2)	kW/kW	4,97	4,92	4,90	4,90	4,85	4,92
Cooling energy class			A	A	A	A	A	A
ENERGY EFFICIENCY								
SEASONAL EFFICIENCY IN COOLING (Reg. EU 2016/2281)								
Ambient refrigeration								
Prated,c	(7)	kW	740	846	901	975	1062	1180
SEER	(7)(8)		5,21	5,11	5,11	5,15	5,10	5,14
Performance ηs	(7)(9)	%	205	202	201	203	201	203
EXCHANGERS								
HEAT EXCHANGER USER SIDE IN REFRIGERATION								
Water flow	(1)	l/s	35,49	40,56	43,20	46,74	50,93	56,59
Pressure drop	(1)	kPa	27,6	31,8	36,0	29,7	35,3	37,3
REFRIGERANT CIRCUIT								
Compressors nr.		N°	2	3	3	3	4	4
No. Circuits		N°	1	2	2	2	2	2
Refrigerant charge		kg	280	340	430	490	480	520
NOISE LEVEL								
Sound Pressure	(3)	dB(A)	59	60	60	60	61	61
Sound power level in cooling	(4)(5)	dB(A)	92	93	93	93	94	94
SIZE AND WEIGHT								
A	(6)	mm	7000	8500	9700	10600	11200	11500
B	(6)	mm	2260	2260	2260	2260	2260	2260
H	(6)	mm	2430	2430	2430	2430	2430	2430
Operating weight	(6)	kg	6150	6940	7370	8150	8700	9020

Notes:
1 Plant (side) cooling exchanger water (in/out) 12°C/7°C; Source (side) heat exchanger air (in) 35°C.
2 Values in compliance with EN14511-3:2013.
3 Average sound pressure level at 10m distance, unit in a free field on a reflective surface; non-binding value calculated from the sound power level.
4 Sound power on the basis of measurements made in compliance with ISO 9614.
5 Sound power level in cooling, outdoors.
6 Unit in standard configuration/execution, without optional accessories.
7 Seasonal energy efficiency of the cooling environment [REGULATION (EU) N. 2016/2281]
8 Seasonal space heating energy index
9 Seasonal energy efficiency of the space cooling
The units highlighted in this publication contain HFC R134a [GWP_{100} 1430] fluorinated greenhouse gases.
Certified data in EUROVENT

TECS2 / XL-CA			0211	0251	0351	0452	0512	0552	0652
Power supply		V/ph/Hz	400/3/50	400/3/50	400/3/50	400/3/50	400/3/50	400/3/50	400/3/50
PERFORMANCE									
COOLING ONLY (GROSS VALUE)									
Cooling capacity	(1)	kW	220	254	341	435	525	579	640
Total power input	(1)	kW	68,5	79,8	109	137	166	171	206
EER	(1)	kW/kW	3,21	3,19	3,12	3,19	3,17	3,38	3,11
ESEER	(1)	kW/kW	4,75	4,99	4,84	5,19	5,23	5,17	5,19
COOLING ONLY (EN14511 VALUE)									
Cooling capacity	(1)(2)	kW	219	254	340	434	524	578	639
EER	(1)(2)	kW/kW	3,17	3,15	3,08	3,16	3,14	3,34	3,08
ESEER	(1)(2)	kW/kW	4,61	4,84	4,69	5,02	5,03	4,94	5,03
Cooling energy class			A	A	B	A	A	A	B
ENERGY EFFICIENCY									
SEASONAL EFFICIENCY IN COOLING (Reg. EU 2016/2281)									
Ambient refrigeration									
Prated,c	(7)	kW	219	254	340	434	524	578	639
SEER	(7)(8)		4,82	5,00	4,98	5,19	5,20	5,11	5,27
Performance ηs	(7)(9)	%	190	197	196	205	205	201	208
EXCHANGERS									
HEAT EXCHANGER USER SIDE IN REFRIGERATION									
Water flow	(1)	l/s	10,53	12,16	16,31	20,82	25,13	27,71	30,62
Pressure drop	(1)	kPa	32,6	26,7	27,7	26,7	29,5	35,9	20,5
REFRIGERANT CIRCUIT									
Compressors nr.		N°	1	1	1	2	2	2	2
No. Circuits		N°	1	1	1	1	1	1	1
Refrigerant charge		kg	100	100	130	220	220	240	270
NOISE LEVEL									
Sound Pressure	(3)	dB(A)	50	50	51	51	52	52	52
Sound power level in cooling	(4)(5)	dB(A)	82	82	83	83	84	85	85
SIZE AND WEIGHT									
A	(6)	mm	3100	3100	4000	4900	5800	7000	7000
B	(6)	mm	2260	2260	2260	2260	2260	2260	2260
H	(6)	mm	2430	2430	2430	2430	2430	2430	2430
Operating weight	(6)	kg	2370	2420	3200	4240	4690	5350	6150

TECS2 / XL-CA			0712	0853	0913	1013	1054	1154
Power supply		V/ph/Hz	400/3/50	400/3/50	400/3/50	400/3/50	400/3/50	400/3/50
PERFORMANCE								
COOLING ONLY (GROSS VALUE)								
Cooling capacity	(1)	kW	739	874	900	972	1049	1174
Total power input	(1)	kW	226	279	290	312	331	377
EER	(1)	kW/kW	3,27	3,13	3,11	3,12	3,17	3,11
ESEER	(1)	kW/kW	5,24	5,24	5,30	5,24	5,19	5,23
COOLING ONLY (EN14511 VALUE)								
Cooling capacity	(1)(2)	kW	737	872	897	970	1046	1171
EER	(1)(2)	kW/kW	3,24	3,10	3,07	3,09	3,13	3,08
ESEER	(1)(2)	kW/kW	5,05	5,03	5,06	5,04	4,96	5,01
Cooling energy class			A	A	B	B	A	B
ENERGY EFFICIENCY								
SEASONAL EFFICIENCY IN COOLING (Reg. EU 2016/2281)								
Ambient refrigeration								
Prated,c	(7)	kW	737	872	897	970	1046	1171
SEER	(7)(8)		5,24	5,20	5,23	5,27	5,20	5,22
Performance ηs	(7)(9)	%	207	205	206	208	205	206
EXCHANGERS								
HEAT EXCHANGER USER SIDE IN REFRIGERATION								
Water flow	(1)	l/s	35,33	41,78	43,03	46,47	50,15	56,14
Pressure drop	(1)	kPa	27,3	33,7	35,7	29,4	34,2	36,8
REFRIGERANT CIRCUIT								
Compressors nr.		N°	2	3	3	3	4	4
No. Circuits		N°	1	2	2	2	2	2
Refrigerant charge		kg	310	410	450	520	500	580
NOISE LEVEL								
Sound Pressure	(3)	dB(A)	53	53	53	54	54	55
Sound power level in cooling	(4)(5)	dB(A)	86	86	86	87	87	88
SIZE AND WEIGHT								
A	(6)	mm	7900	9400	9700	10600	11200	12400
B	(6)	mm	2260	2260	2260	2260	2260	2260
H	(6)	mm	2430	2430	2430	2430	2430	2430
Operating weight	(6)	kg	6650	7520	7770	8650	9150	9960

Notes:
1 Plant (side) cooling exchanger water (in/out) 12°C/7°C; Source (side) heat exchanger air (in) 35°C.
2 Values in compliance with EN14511-3:2013.
3 Average sound pressure level at 10m distance, unit in a free field on a reflective surface; non-binding value calculated from the sound power level.
4 Sound power on the basis of measurements made in compliance with ISO 9614.
5 Sound power level in cooling, outdoors.
6 Unit in standard configuration/execution, without optional accessories.
7 Seasonal energy efficiency of the cooling environment [REGULATION (EU) N. 2016/2281]
8 Seasonal space heating energy index
9 Seasonal energy efficiency of the space cooling
The units highlighted in this publication contain HFC R134a [GWP_{100} 1430] fluorinated greenhouse gases.
Certified data in EUROVENT

TECS2 / SL-CA-E			0211	0251	0351	0452	0512	0552	0652
Power supply		V/ph/Hz	400/3/50	400/3/50	400/3/50	400/3/50	400/3/50	400/3/50	400/3/50
PERFORMANCE									
COOLING ONLY (GROSS VALUE)									
Cooling capacity	(1)	kW	229	285	385	455	527	590	703
Total power input	(1)	kW	67,1	81,3	113	134	154	168	204
EER	(1)	kW/kW	3,41	3,50	3,40	3,41	3,41	3,50	3,45
ESEER	(1)	kW/kW	5,29	5,52	5,43	5,79	5,71	5,64	5,77
COOLING ONLY (EN14511 VALUE)									
Cooling capacity	(1)(2)	kW	228	284	383	454	526	588	701
EER	(1)(2)	kW/kW	3,36	3,45	3,35	3,37	3,38	3,46	3,42
ESEER	(1)(2)	kW/kW	5,09	5,31	5,19	5,55	5,46	5,34	5,57
Cooling energy class			A	A	A	A	A	A	A
ENERGY EFFICIENCY									
SEASONAL EFFICIENCY IN COOLING (Reg. EU 2016/2281)									
Ambient refrigeration									
Prated,c	(7)	kW	228	284	383	454	526	588	701
SEER	(7)(8)		5,39	5,50	5,52	5,82	5,76	5,60	5,84
Performance ηs	(7)(9)	%	213	217	218	230	227	221	231
EXCHANGERS									
HEAT EXCHANGER USER SIDE IN REFRIGERATION									
Water flow	(1)	l/s	10,93	13,62	18,39	21,76	25,19	28,21	33,61
Pressure drop	(1)	kPa	35,2	33,5	35,2	29,2	29,7	37,2	24,7
REFRIGERANT CIRCUIT									
Compressors nr.		N°	1	1	1	2	2	2	2
No. Circuits		N°	1	1	1	1	1	1	1
Refrigerant charge		kg	100	100	130	220	220	240	270
NOISE LEVEL									
Sound Pressure	(3)	dB(A)	56	56	58	58	58	59	59
Sound power level in cooling	(4)(5)	dB(A)	88	88	90	90	90	91	92
SIZE AND WEIGHT									
A	(6)	mm	3100	3100	4000	4900	4900	5800	7000
B	(6)	mm	2260	2260	2260	2260	2260	2260	2260
H	(6)	mm	2430	2430	2430	2430	2430	2430	2430
Operating weight	(6)	kg	2270	2350	3130	4070	4230	4570	6040

TECS2 / SL-CA-E			0712	0853	0913	1013	1054	1154
Power supply		V/ph/Hz	400/3/50	400/3/50	400/3/50	400/3/50	400/3/50	400/3/50
PERFORMANCE								
COOLING ONLY (GROSS VALUE)								
Cooling capacity	(1)	kW	796	902	969	1086	1177	1324
Total power input	(1)	kW	233	263	279	317	336	383
EER	(1)	kW/kW	3,41	3,43	3,48	3,42	3,50	3,46
ESEER	(1)	kW/kW	5,77	5,62	5,79	5,71	5,87	5,75
COOLING ONLY (EN14511 VALUE)								
Cooling capacity	(1)(2)	kW	794	900	966	1083	1173	1320
EER	(1)(2)	kW/kW	3,37	3,39	3,43	3,38	3,45	3,41
ESEER	(1)(2)	kW/kW	5,51	5,37	5,48	5,44	5,55	5,42
Cooling energy class			A	A	A	A	A	A
ENERGY EFFICIENCY								
SEASONAL EFFICIENCY IN COOLING (Reg. EU 2016/2281)								
Ambient refrigeration								
Prated,c	(7)	kW	794	900	966	1083	1173	1320
SEER	(7)(8)		5,76	5,66	5,73	5,75	5,79	5,70
Performance ηs	(7)(9)	%	227	223	226	227	229	225
EXCHANGERS								
HEAT EXCHANGER USER SIDE IN REFRIGERATION								
Water flow	(1)	l/s	38,05	43,14	46,35	51,91	56,30	63,34
Pressure drop	(1)	kPa	31,7	35,9	41,5	36,7	43,1	46,8
REFRIGERANT CIRCUIT								
Compressors nr.		N°	2	3	3	3	4	4
No. Circuits		N°	1	2	2	2	2	2
Refrigerant charge		kg	310	410	450	520	500	580
NOISE LEVEL								
Sound Pressure	(3)	dB(A)	59	60	60	60	61	62
Sound power level in cooling	(4)(5)	dB(A)	92	93	93	93	94	95
SIZE AND WEIGHT								
A	(6)	mm	7900	8500	9700	10600	11200	12400
B	(6)	mm	2260	2260	2260	2260	2260	2260
H	(6)	mm	2430	2430	2430	2430	2430	2430
Operating weight	(6)	kg	6450	7020	7610	8510	8660	9720

Notes:
1 Plant (side) cooling exchanger water (in/out) 12°C/7°C; Source (side) heat exchanger air (in) 35°C.
2 Values in compliance with EN14511-3:2013.
3 Average sound pressure level at 10m distance, unit in a free field on a reflective surface; non-binding value calculated from the sound power level.
4 Sound power on the basis of measurements made in compliance with ISO 9614.
5 Sound power level in cooling, outdoors.
6 Unit in standard configuration/execution, without optional accessories.
7 Seasonal energy efficiency of the cooling environment [REGULATION (EU) N. 2016/2281]
8 Seasonal space heating energy index
9 Seasonal energy efficiency of the space cooling
The units highlighted in this publication contain HFC R134a [GWP_{100} 1430] fluorinated greenhouse gases.
Certified data in EUROVENT

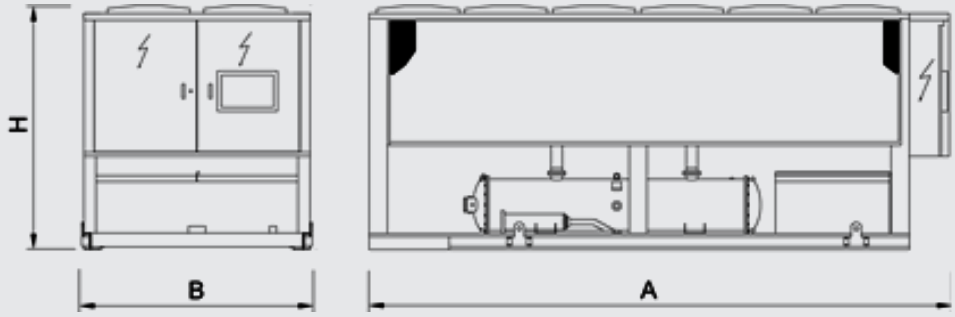
H
B
A

CHILLERS

TECS2 HFO 0351 - 1053

High efficiency chiller, air source for outdoor installation
339-1017 kW



Version

SL-CA-E	Super Low noise version, Premium efficiency, Class A enhanced (based on Eurovent classification)

Configurations

-	Basic function

Features

HFO REFRIGERANT

4th generation refrigerant HFO 1234ze, with negligible greenhouse effect in comparison with traditional HFC refrigerants (Global Warming Potential GWP of HFO 1234ze < 1, GWP of R134a = 1300 as per IPCC rev. 5th) and zero impact on the ozone layer.

VERY HIGH EFFICIENCY

Very high efficiency at full and partial load, to top market levels, thanks to adopted technological solutions: large capacity modulation and expanded exchanger, offering minimum running costs of the unit in real working conditions.

EXTREMELY SILENT OPERATION

The best compromise between silence and efficiency, as result of a sistematic design oriented to minimize the noise level.

LOW INRUSH CURRENTS

Reduced breakaway starting currents thanks to the revolutionary centrifugal compressor.

Accessory

- VPF (Variable Primary Flow) kit: variable flow pumps with on board regulation
- Hydronic group
- Set-up for remote connectivity with ModBus/Echelon protocol cards

Outdoor unit for the production of chilled water featuring oil-free centrifugal compressor, with refrigerant HFO (1234-ze), axial-flow fans, condensing coil with copper tubes and aluminium fins, shell and tube flooded evaporator and electronic regulation valve. Base and supporting structure and panels are of galvanized epoxy powder coated steel with increased thickness. Flexible and reliable unit; it easily adapts itself to different thermal load conditions thanks to the precise thermoregulation together with the use of inverter technology. The compressor is radically innovative: magnetic bearings and digital rotor speed control allow partial load efficiency levels to be reached that were hither to impossible.

Controls

W3000TE

The brand new W3000TE controller offers advanced functions and algorithms. The large format keyboard and the wide LCD display favour an easy and safe access to the machine setup and a complete view of unit's staus. The assessment and intervention on the unit is managed through a multi-level menu, with selectable user's language. The led icons immediately show the operating status of the circuits, as well as of the fans and of the water pumps (if present). An optional extra is the touch screen interface: 7.0" WVGA colour display with adjustable LED backlight and front USB port. The touch screen technology allows intuitive navigation between the various screens, safe access to the data with a three-level password protection as well as the graphic display of the performance of some monitored measurements.

The diagnostics comprises a complete alarm management system, with "black box" (via PC) and alarm log functions (via display or also PC) for a better analysis of the unit performance.

For the systems made of several units, the adjustment of the resources is performed by optional proprietary devices.

Consumption metering and performance measurement are possible as well. Supervision can be easily developed via proprietary devices or the integration in third party systems by means of the most common protocols as ModBus, Bacnet-over-IP, Echelon LonWorks, Bacnet MS/TP protocols.

Compatibility with the remote keyboard managing up to 8 units.

The presence of the programmable timer allows the creation of an operating profile containing up to 4 typical days and 10 time bands.

The control is characterized by the continuous modulation of the unit capacity, based on PID algorithms and referring to the water delivery temperature.

Optionally (VPF package), capacity modulation can be integrated with hydraulic flow modulation, thanks to inverter-driven pumps and to specific resources for the hydraulic circuit.



TECS2 HFO / SL-CA-E			0351	0702	1053
Power supply		V/ph/Hz	400/3/50	400/3/50	400/3/50
PERFORMANCE					
COOLING ONLY (GROSS VALUE)					
Cooling capacity	(1)	kW	339	679	1017
Total power input	(1)	kW	96,3	192	282
EER	(1)	kW/kW	3,52	3,53	3,60
ESEER	(1)	kW/kW	5,56	5,96	6,00
COOLING ONLY (EN14511 VALUE)					
Cooling capacity	(1)(2)	kW	338	677	1014
EER	(1)(2)	kW/kW	3,48	3,50	3,55
ESEER	(1)(2)	kW/kW	5,36	5,75	5,64
Cooling energy class			A	A	A
ENERGY EFFICIENCY					
SEASONAL EFFICIENCY IN COOLING (Reg. EU 2016/2281)					
Ambient refrigeration					
Prated,c	(7)	kW	338	677	1014
SEER	(7)(8)		5,65	5,99	5,89
Performance ηs	(7)(9)	%	223	237	233
EXCHANGERS					
HEAT EXCHANGER USER SIDE IN REFRIGERATION					
Water flow	(1)	l/s	16,22	32,45	48,66
Pressure drop	(1)	kPa	27,4	23,1	45,7
REFRIGERANT CIRCUIT					
Compressors nr.		N°	1	2	3
No. Circuits		N°	1	1	2
Refrigerant charge		kg	150	475	550
NOISE LEVEL					
Sound Pressure	(3)	dB(A)	58	59	60
Sound power level in cooling	(4)(5)	dB(A)	90	92	93
SIZE AND WEIGHT					
A	(6)	mm	4000	7900	9700
B	(6)	mm	2260	2260	2260
H	(6)	mm	2430	2430	2430
Operating weight	(6)	kg	3130	6450	7610

Notes:
1 Plant (side) cooling exchanger water (in/out) 12°C/7°C; Source (side) heat exchanger air (in) 35°C.
2 Values in compliance with EN14511-3:2013.
3 Average sound pressure level at 10m distance, unit in a free field on a reflective surface; non-binding value calculated from the sound power level.
4 Sound power on the basis of measurements made in compliance with ISO 9614.
5 Sound power level in cooling, outdoors.
6 Unit in standard configuration/execution, without optional accessories.
7 Seasonal energy efficiency of the cooling environment [REGULATION (EU) N. 2016/2281]
8 Seasonal space heating energy index
9 Seasonal energy efficiency of the space cooling
The units highlighted in this publication contain HFC HFO-1234ze [GWP_{100} 7] fluorinated greenhouse gases.
Certified data in EUROVENT

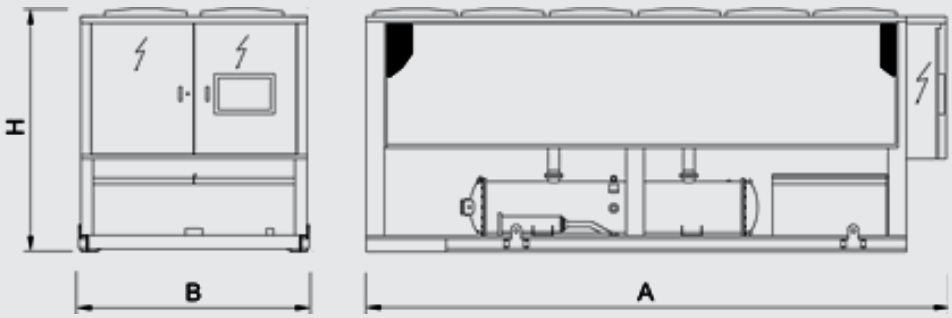

CHILLERS

NX-W 0122 - 1204

Water cooled chiller
38,1-398 kW



Water to water indoor unit for the production of chilled water with hermetic rotary Scroll compressors, braze-welded plate-type exchanger and electronic expansion valve. Basement and frame in hot-galvanised shaped sheet steel with a suitable thickness. All parts polyester-powder painted to assure total weather resistance, RAL 7035.
The range includes the single-circuit two-compressor versions and the dual circuit four-compressor versions.

Version

- Basic

Configurations

- Basic function

Features

HIGH EFFICIENCY

Very high efficiency at full and partial load, at the highest market levels, thanks to the adopted technological solutions. These units ensure low operating costs and therefore a quick payback time.

ErP READY

The highest level of efficiency at part load can meet and exceed the minimum seasonal efficiency for heating, SCOP (only for reversible units) and for cooling, SEER, according with the eco-sustainable design requirements for all products using energy. The units already comply with the minimum seasonal energy efficiency requirements that will start from 2021.

VARIBLE PRIMARY FLOW (OPTION)

Energy saving due to variable pump speed management based on load demand and the variable flow assures the functioning of the units also with critical working conditions. VPF (Variable Primary Flow) available for sizes 0604-1204.

EXTREMELY SILENT OPERATION

Extremely silent operation together with high efficiency, tank to dedicated acoustic devices and a precise design for the choice of the components.

INTEGRATED HYDRONIC MODULE

The built-in hydronic module already contains the main water circuit components; it is available as option with single or twin in-line pump, for achieving low head, fixed or variable speed, available for user side and source side (up to 4 pumps).

INTEGRATED CONDENSATION´S CONTROL

The electronics of the units manages the most suitable condensing control for each type of application: pressure-controlled valve, two or three-way modulating valv, 0-10V signal for variable speed driven pumps.

TOTAL VERSATILITY

Climaveneta has designed the NX-W units with a range of integral accessories in mind for operation with total water loss (well, water bed, etc.), dry cooler or cooling tower and suitable for geothermal application so as to satisfy all service system and installation requirements.

ELECTRONIC EXPANSION VALVE SUPPLIED STANDARD

The use of the electronic expansion valve generates considerable benefits, especially in cases of variable demand and at different working conditions. It guaranteed energy saving due to efficiency optimization in various different working conditions. The electronic thermostatic valve allows you to obtain speed in reaching machine stability and an extension of the operating limits.

Accessory

- Touch Screen visual display
- Set-up for remote connectivity with ModBus/Echelon protocol cards
- Outside air temperature probe for plant water set point compensation.
- Integral acoustical enclosure (type base)
- Thicker soundproofing cladding
- User side and source side hydronic kit available in different configurations
- VPF (Variable Primary Flow) system
- Condensing control device: two or three-way modulating pressure-controlled valve and inverter on pumps

Controls

Electronic control W3000TE

The brand new W3000TE controller offers advanced functions and algorithms.
The keypad W3000 Compact, as standard equipment, features function controls and a complete LCD display for viewing data and activating the unit, via a multilevel menu, with settable display language.
The controller provides water temperature control for the heating systems, cooling systems (only for reversible units), as well as for domestic hot water (only for reversible units). These different temperatures are managed automatically based on the different conditions in which the system operates, with the possibility to assign specific levels of priority to domestic hot water production, depending on the needs of the application.
The regulation is based on the exclusive QuickMind algorithm, including self-adaptive control logics, beneficial in low water content systems. As alternatives the proportional- or proportional- integral regulations are also available.
Diagnostics include complete alarm management, with “blackbox” functions (via PC) and alarm log (display or PC) for best analysis of unit be haviour. For systems made up of multiple units, differentiated device management means just a certain portion of the capacity installed can be dedicated to domestic water production, in this way ensuring more efficient energy distribution and, at the same time, guaranteeing simultaneous water delivery to the different distribution systems. The built-in clock can be used to create an operating profile containing up to 4 typical days and 10 time bands, essential for efficient programming of energy production and fundamental for managing the Legionella prevention cycles. Available time bands also for DHW production.
Supervision is available with different options, using proprietary devices or by integration into third party systems using ModBus, BACnet, BACnet-over-IP and Echelon LonWorks protocols.
A dedicated wall-mounted keypad can be used for remote control of all the functions.
Optionally (VPF package), capacity modulation can be integrated with hydraulic flow modulation, thanks to inverter-driven pumps and to specific resources for the hydraulic circuit.



NX-W			0122	0152	0182	0202	0252	0262	0302	0352
Power supply		V/ph/Hz	400/3/50	400/3/50	400/3/50	400/3/50	400/3/50	400/3/50	400/3/50	400/3/50
PERFORMANCE										
COOLING ONLY (GROSS VALUE)										
Cooling capacity	(1)	kW	38,1	47,7	56,2	65,3	72,3	82,3	96,7	111
Total power input	(1)	kW	7,53	9,31	10,8	12,6	13,8	16,0	18,9	21,7
EER	(1)	kW/kW	5,06	5,12	5,20	5,18	5,24	5,14	5,12	5,13
ESEER	(1)	kW/kW	6,46	6,76	6,42	6,47	6,72	6,41	6,49	6,63
COOLING ONLY (EN14511 VALUE)										
Cooling capacity	(1)(2)	kW	37,9	47,5	55,9	65,1	72,0	82,0	96,4	111
EER	(1)(2)	kW/kW	4,85	4,89	4,96	4,96	5,01	4,96	4,94	4,96
ESEER	(1)(2)	kW/kW	5,89	6,10	5,81	5,93	6,12	5,95	6,04	6,13
Cooling energy class			B	B	B	B	B	B	B	B
ENERGY EFFICIENCY										
SEASONAL EFFICIENCY IN COOLING (Reg. EU 2016/2281)										
Ambient refrigeration										
Prated,c	(7)	kW	37,9	47,5	55,9	65,1	72,0	82,0	96,4	111
SEER	(7)(8)		5,33	5,65	5,41	5,53	5,72	5,66	5,80	5,92
Performance ηs	(7)(9)	%	205	218	208	213	221	218	224	229
EXCHANGERS										
HEAT EXCHANGER USER SIDE IN REFRIGERATION										
Water flow	(1)	l/s	1,82	2,28	2,69	3,12	3,46	3,94	4,62	5,33
Pressure drop	(1)	kPa	21,6	26,6	26,7	21,8	21,6	21,8	22,7	22,9
HEAT EXCHANGER SOURCE SIDE IN REFRIGERATION										
Water flow	(1)	l/s	2,18	2,72	3,19	3,71	4,11	4,68	5,50	6,34
Pressure drop	(1)	kPa	11,8	15,7	18,1	20,6	23,1	13,5	14,2	14,6
REFRIGERANT CIRCUIT										
Compressors nr.		N°	2	2	2	2	2	2	2	2
No. Circuits		N°	1	1	1	1	1	1	1	1
Refrigerant charge		kg	3,80	4,20	5,00	5,50	6,10	8,60	10,0	11,6
NOISE LEVEL										
Sound Pressure	(3)	dB(A)	57	57	58	58	58	59	60	60
Sound power level in cooling	(4)(5)	dB(A)	73	73	74	74	74	75	76	77
SIZE AND WEIGHT										
A	(6)	mm	1225	1225	1225	1225	1225	1225	1225	1570
B	(6)	mm	885	885	885	885	885	885	885	885
H	(6)	mm	1495	1495	1495	1495	1495	1495	1495	1805
Operating weight	(6)	kg	360	360	390	410	440	480	520	660

Notes:
1 Plant (side) cooling exchanger water (in/out) 12°C/7°C; Source (side) heat exchanger water (in/out) 30°C/35°C.
2 Values in compliance with EN14511-3:2013.
3 Average sound pressure level at 1m distance, unit in a free field on a reflective surface; non-binding value calculated from the sound power level.
4 Sound power on the basis of measurements made in compliance with ISO 9614.
5 Sound power level in cooling, indoors.
6 Unit in standard configuration/execution, without optional accessories.
7 Seasonal energy efficiency of the cooling environment [REGULATION (EU) N. 2016/2281]
8 Seasonal space heating energy index
9 Seasonal energy efficiency of the space cooling
The units highlighted in this publication contain HFC R410A [GWP_{100} 2088] fluorinated greenhouse gases.

NX-W			0402	0452	0502	0552	0602	0702	0802	0604
Power supply		V/ph/Hz	400/3/50	400/3/50	400/3/50	400/3/50	400/3/50	400/3/50	400/3/50	400/3/50
PERFORMANCE										
COOLING ONLY (GROSS VALUE)										
Cooling capacity	(1)	kW	126	142	157	181	204	231	254	192
Total power input	(1)	kW	24,5	27,7	30,9	35,2	39,6	45,2	51,2	38,3
EER	(1)	kW/kW	5,15	5,12	5,10	5,14	5,16	5,10	4,97	5,01
ESEER	(1)	kW/kW	6,34	6,47	6,32	6,42	6,42	6,50	6,06	6,60
COOLING ONLY (EN14511 VALUE)										
Cooling capacity	(1)(2)	kW	126	141	157	181	204	230	253	191
EER	(1)(2)	kW/kW	4,98	4,96	4,93	4,98	5,00	4,93	4,79	4,88
ESEER	(1)(2)	kW/kW	5,95	6,04	5,92	6,00	6,01	6,03	5,63	6,14
Cooling energy class			B	B	B	B	B	B	B	B
ENERGY EFFICIENCY										
SEASONAL EFFICIENCY IN COOLING (Reg. EU 2016/2281)										
Ambient refrigeration										
Prated,c	(7)	kW	126	141	157	181	204	230	253	191
SEER	(7)(8)		5,72	5,81	5,69	5,83	5,80	5,86	5,39	6,00
Performance ηs	(7)(9)	%	221	224	220	225	224	226	207	232
EXCHANGERS										
HEAT EXCHANGER USER SIDE IN REFRIGERATION										
Water flow	(1)	l/s	6,03	6,78	7,53	8,66	9,78	11,02	12,16	9,17
Pressure drop	(1)	kPa	23,1	23,8	24,4	24,9	25,5	30,7	37,4	17,1
HEAT EXCHANGER SOURCE SIDE IN REFRIGERATION										
Water flow	(1)	l/s	7,17	8,07	8,97	10,30	11,63	13,14	14,55	10,96
Pressure drop	(1)	kPa	15,4	15,9	18,5	18,3	21,0	23,5	28,8	16,2
REFRIGERANT CIRCUIT										
Compressors nr.		N°	2	2	2	2	2	2	2	4
No. Circuits		N°	1	1	1	1	1	1	1	2
Refrigerant charge		kg	13,1	14,8	15,7	18,8	21,4	22,4	22,4	19,3
NOISE LEVEL										
Sound Pressure	(3)	dB(A)	60	61	61	62	62	65	66	69
Sound power level in cooling	(4)(5)	dB(A)	77	78	78	79	79	82	83	86
SIZE AND WEIGHT										
A	(6)	mm	1570	1570	1570	1570	1570	1570	1570	2210
B	(6)	mm	885	885	885	885	885	885	885	885
H	(6)	mm	1805	1805	1805	1805	1805	1805	1805	1805
Operating weight	(6)	kg	740	790	820	870	920	940	960	870

Notes:
1 Plant (side) cooling exchanger water (in/out) 12°C/7°C; Source (side) heat exchanger water (in/out) 30°C/35°C.
2 Values in compliance with EN14511-3:2013.
3 Average sound pressure level at 1m distance, unit in a free field on a reflective surface; non-binding value calculated from the sound power level.
4 Sound power on the basis of measurements made in compliance with ISO 9614.
5 Sound power level in cooling, indoors.
6 Unit in standard configuration/execution, without optional accessories.
7 Seasonal energy efficiency of the cooling environment [REGULATION (EU) N. 2016/2281]
8 Seasonal space heating energy index
9 Seasonal energy efficiency of the space cooling
The units highlighted in this publication contain HFC R410A [GWP_{100} 2088] fluorinated greenhouse gases.

NX-W			0704	0804	0904	1004	1104	1204
Power supply		V/ph/Hz	400/3/50	400/3/50	400/3/50	400/3/50	400/3/50	400/3/50
PERFORMANCE								
COOLING ONLY (GROSS VALUE)								
Cooling capacity	(1)	kW	221	250	281	313	359	398
Total power input	(1)	kW	43,9	49,6	56,1	62,5	71,3	80,0
EER	(1)	kW/kW	5,03	5,04	5,01	5,00	5,04	4,98
ESEER	(1)	kW/kW	6,64	6,58	6,64	6,53	6,61	6,57
COOLING ONLY (EN14511 VALUE)								
Cooling capacity	(1)(2)	kW	220	249	281	312	358	397
EER	(1)(2)	kW/kW	4,91	4,91	4,88	4,86	4,89	4,81
ESEER	(1)(2)	kW/kW	6,16	6,12	6,13	6,02	6,03	5,96
Cooling energy class			B	B	B	B	B	B
ENERGY EFFICIENCY								
SEASONAL EFFICIENCY IN COOLING (Reg. EU 2016/2281)								
Ambient refrigeration								
Prated,c	(7)	kW	220	249	281	312	358	397
SEER	(7)(8)		6,04	5,97	5,98	5,87	5,89	5,79
Performance ηs	(7)(9)	%	233	231	231	227	228	224
EXCHANGERS								
HEAT EXCHANGER USER SIDE IN REFRIGERATION								
Water flow	(1)	l/s	10,57	11,96	13,45	14,95	17,18	19,05
Pressure drop	(1)	kPa	18,1	20,0	21,3	24,9	28,2	34,7
HEAT EXCHANGER SOURCE SIDE IN REFRIGERATION								
Water flow	(1)	l/s	12,62	14,27	16,07	17,87	20,51	22,78
Pressure drop	(1)	kPa	17,4	19,6	22,0	24,8	30,0	36,2
REFRIGERANT CIRCUIT								
Compressors nr.		N°	4	4	4	4	4	4
No. Circuits		N°	2	2	2	2	2	2
Refrigerant charge		kg	22,5	25,3	28,8	41,1	47,0	49,0
NOISE LEVEL								
Sound Pressure	(3)	dB(A)	70	71	72	73	74	74
Sound power level in cooling	(4)(5)	dB(A)	87	88	89	90	91	91
SIZE AND WEIGHT								
A	(6)	mm	2210	2650	2650	2650	2650	2650
B	(6)	mm	885	885	885	885	885	885
H	(6)	mm	1805	1805	1805	1805	1805	1805
Operating weight	(6)	kg	1050	1240	1330	1530	1630	1710

Notes:
1 Plant (side) cooling exchanger water (in/out) 12°C/7°C; Source (side) heat exchanger water (in/out) 30°C/35°C.
2 Values in compliance with EN14511-3:2013.
3 Average sound pressure level at 1m distance, unit in a free field on a reflective surface; non-binding value calculated from the sound power level.
4 Sound power on the basis of measurements made in compliance with ISO 9614.
5 Sound power level in cooling, indoors.
6 Unit in standard configuration/execution, without optional accessories.
7 Seasonal energy efficiency of the cooling environment [REGULATION (EU) N. 2016/2281]
8 Seasonal space heating energy index
9 Seasonal energy efficiency of the space cooling
The units highlighted in this publication contain HFC R410A [GWP_{100} 2088] fluorinated greenhouse gases.
Certified data in EUROVENT

Size 0122-802

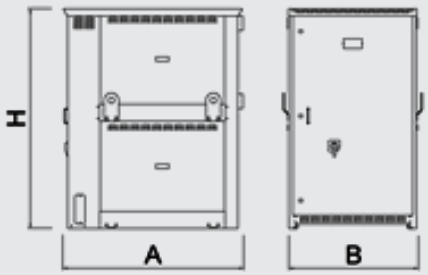

Size 0604-1204

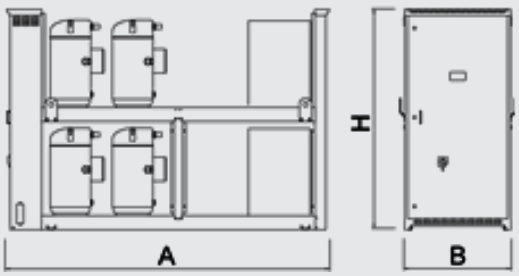

CHILLERS

FX-W 0551 - 1752

Water cooled chiller
124-401 kW



Configurations

-	Basic function
D	Partial condensing heat recovery function
R	Total condensing heat recovery function

Features

ErP READY

Thanks to the high level of efficiency at part load, the unit can meet and exceed the minimum energy efficiency threshold rated by the Seasonal Energy Efficiency Ratio SEER, in accordance with the eco-sustainable design requirements for all products using energy. For this reason, the unit represents the best choice for all the hydronic installations on the residential and commercial air conditioning systems.

MAXIMUM COMPACTNESS

Maximum compactness to achieve a very high flexibility in the design process and installation operations, offering a premium solution in case of reduced clearances or when retrofitting existing installations.

ELECTRONIC EXPANSION VALVE SUPPLIED STANDARD

The electronic expansion valve brings several benefits especially in case of variable thermal load conditions and source temperature. It improves the efficiency of the unit and reduces power consumption, and allows a faster ramp-up time and wider operating limits.

ADAPTABILITY

Adaptability at the building's cooling request thanks to the continuous capacity regulation, assured by sophisticated control's logic.

Accessory

- VPF (Variable Primary Flow) system
- Several devices for condensation´s control
- Set-up for remote connectivity with ModBus, Echelon, Bacnet, Bacnet over-IP.
- Touch Screen visual display
- KIPlink user interface

Indoor unit for the production of chilled water featuring semihermetic screw compressors optimized to operate with low compression ratio and R134a, shell and tubes evaporator designed by Mitsubishi Electric Hydronics & IT Cooling Systems S.p.A. and shell and tube condenser and electronic expansion valve.
Base and supporting structure is made of polyester painted galvanized steel. Eurovent certification. The unit results extremely compact, thanks to the peculiar construction layout, without base frame and panels, and extremely flexible to easily adapts itself to different thermal load conditions thanks to the precise thermoregulation The high performance's level is achieved thanks to the accurate sizing of all internal components.

Controls

Electronic control W3000TE

The brand new W3000TE controller offers advanced functions and algorithms. The LARGE keyboard with a large format and the wide LCD display favour an easy and safe access to the machine setup and a complete view of unit's status. The assessment and intervention on the unit is managed through a multi-level menu, with selectable user's language. The led icons immediately show the operating status of the circuits. In addition to or as an alternative at Large Keyboard, the KIPlink - Keyboard In Your Pocket - is the innovative user interface based on WiFi technology that allows one to operate on the unit directly from the smartphone or tablet.
The diagnostics comprises a complete alarm management system, with "black box" (via PC) and alarm log functions (via display or also PC) for enhanced analysis of the unit operation.
Optional proprietary devices can perform the adjustment of the resources in systems made of several units. Consumption metering and performance measurement are possible as well. Supervision can be easily developed via proprietary devices or the integration in third party systems by means of the most common protocols as ModBus, Bacnet, Bacnet-over-IP, LonWorks.
Compatibility with the remote keyboard managing up to 8 units. The programmable timer manages a weekly schedule organised into time bands to optimise unit performance by minimising power consumption during periods of inactivity. Up to 10 daily time bands can be associated with different operating set points. The regulation operates on the water circuits featuring the step-wise regulation referred to the return water temperature with proportional logic. Optionally (VPF package), capacity modulation can be integrated with hydraulic flow modulation, thanks to inverter-driven pumps and to specific resources for the hydraulic circuit.



FX-W			0551	0651	0751	0851	0951	1102
Power supply		V/ph/Hz	400/3/50	400/3/50	400/3/50	400/3/50	400/3/50	400/3/50
PERFORMANCE								
COOLING ONLY (GROSS VALUE)								
Cooling capacity	(1)	kW	124	140	166	198	222	252
Total power input	(1)	kW	24,5	27,3	34,1	38,9	44,2	49,0
EER	(1)	kW/kW	5,07	5,15	4,88	5,10	5,02	5,15
ESEER	(1)	kW/kW	5,98	6,02	5,95	6,01	5,94	6,34
COOLING ONLY (EN14511 VALUE)								
Cooling capacity	(1)(2)	kW	124	140	166	198	221	251
EER	(1)(2)	kW/kW	4,90	4,97	4,69	4,90	4,82	4,96
ESEER	(1)(2)	kW/kW	5,53	5,57	5,48	5,51	5,44	5,75
Cooling energy class			B	B	B	B	B	B
ENERGY EFFICIENCY								
SEASONAL EFFICIENCY IN COOLING (Reg. EU 2016/2281)								
Ambient refrigeration								
Prated,c	(7)	kW	124	140	166	198	221	251
SEER	(7)(8)		5,38	5,43	5,38	5,46	5,37	5,67
Performance ηs	(7)(9)	%	207	209	207	211	207	219
EXCHANGERS								
HEAT EXCHANGER USER SIDE IN REFRIGERATION								
Water flow	(1)	l/s	5,94	6,72	7,95	9,48	10,60	12,07
Pressure drop	(1)	kPa	19,8	19,7	27,6	33,0	41,2	41,0
HEAT EXCHANGER SOURCE SIDE IN REFRIGERATION								
Water flow	(1)	l/s	7,09	7,99	9,55	11,29	12,67	14,36
Pressure drop	(1)	kPa	21,8	25,6	30,6	26,6	26,2	22,4
REFRIGERANT CIRCUIT								
Compressors nr.		N°	1	1	1	1	1	2
No. Circuits		N°	1	1	1	1	1	2
Refrigerant charge		kg	22,0	32,0	30,0	56,0	54,0	44,0
NOISE LEVEL								
Sound Pressure	(3)	dB(A)	75	75	76	76	76	77
Sound power level in cooling	(4)(5)	dB(A)	92	92	93	93	93	95
SIZE AND WEIGHT								
A	(6)	mm	2600	2600	2600	3000	3000	3000
B	(6)	mm	940	940	940	940	940	1100
H	(6)	mm	1500	1500	1500	1500	1500	1600
Operating weight	(6)	kg	1090	1150	1320	1470	1470	1770

Notes:
1 Plant (side) cooling exchanger water (in/out) 12°C/7°C; Source (side) heat exchanger water (in/out) 30°C/35°C.
2 Values in compliance with EN14511-3:2013.
3 Average sound pressure level at 1m distance, unit in a free field on a reflective surface; non-binding value calculated from the sound power level.
4 Sound power on the basis of measurements made in compliance with ISO 9614.
5 Sound power level in cooling, indoors.
6 Unit in standard configuration/execution, without optional accessories.
7 Seasonal energy efficiency of the cooling environment [REGULATION (EU) N. 2016/2281]
8 Seasonal space heating energy index
9 Seasonal energy efficiency of the space cooling
The units highlighted in this publication contain HFC R134a [GWP_{100} 1430] fluorinated greenhouse gases.

FX-W			1302	1402	1502	1602	1752
Power supply		V/ph/Hz	400/3/50	400/3/50	400/3/50	400/3/50	400/3/50
PERFORMANCE							
COOLING ONLY (GROSS VALUE)							
Cooling capacity	(1)	kW	285	312	345	366	401
Total power input	(1)	kW	54,6	61,5	68,4	73,0	83,2
EER	(1)	kW/kW	5,22	5,07	5,05	5,02	4,81
ESEER	(1)	kW/kW	6,31	6,30	6,19	6,12	6,09
COOLING ONLY (EN14511 VALUE)							
Cooling capacity	(1)(2)	kW	284	311	344	365	399
EER	(1)(2)	kW/kW	5,03	4,88	4,88	4,85	4,66
ESEER	(1)(2)	kW/kW	5,75	5,70	5,69	5,63	5,59
Cooling energy class			B	B	B	B	B
ENERGY EFFICIENCY							
SEASONAL EFFICIENCY IN COOLING (Reg. EU 2016/2281)							
Ambient refrigeration							
Prated,c	(7)	kW	284	311	344	365	399
SEER	(7)(8)		5,70	5,65	5,70	5,63	5,59
Performance ηs	(7)(9)	%	220	218	220	217	215
EXCHANGERS							
HEAT EXCHANGER USER SIDE IN REFRIGERATION							
Water flow	(1)	l/s	13,63	14,91	16,51	17,51	19,16
Pressure drop	(1)	kPa	38,5	46,1	32,0	36,0	43,0
HEAT EXCHANGER SOURCE SIDE IN REFRIGERATION							
Water flow	(1)	l/s	16,18	17,79	19,70	20,92	23,03
Pressure drop	(1)	kPa	26,3	28,9	32,5	28,5	24,5
REFRIGERANT CIRCUIT							
Compressors nr.		N°	2	2	2	2	2
No. Circuits		N°	2	2	2	2	2
Refrigerant charge		kg	64,0	62,0	60,0	86,0	110
NOISE LEVEL							
Sound Pressure	(3)	dB(A)	77	78	78	78	78
Sound power level in cooling	(4)(5)	dB(A)	95	96	96	96	96
SIZE AND WEIGHT							
A	(6)	mm	3000	3000	3200	3200	3200
B	(6)	mm	1100	1100	1200	1200	1200
H	(6)	mm	1600	1600	1700	1700	1700
Operating weight	(6)	kg	1880	2040	2320	2450	2590

Notes:
1 Plant (side) cooling exchanger water (in/out) 12°C/7°C; Source (side) heat exchanger water (in/out) 30°C/35°C.
2 Values in compliance with EN14511-3:2013.
3 Average sound pressure level at 1m distance, unit in a free field on a reflective surface; non-binding value calculated from the sound power level.
4 Sound power on the basis of measurements made in compliance with ISO 9614.
5 Sound power level in cooling, indoors.
6 Unit in standard configuration/execution, without optional accessories.
7 Seasonal energy efficiency of the cooling environment [REGULATION (EU) N. 2016/2281]
8 Seasonal space heating energy index
9 Seasonal energy efficiency of the space cooling
The units highlighted in this publication contain HFC R134a [GWP_{100} 1430] fluorinated greenhouse gases.
Certified data in EUROVENT

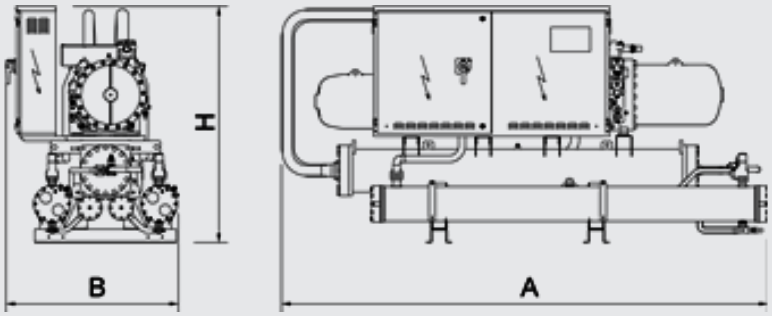

CHILLERS

FOCS2-W 1301 - 9604

High efficiency water cooled chiller 306-2416 kW



Unit for indoor installation for chilled water production. Semihermetic screw compressors optimized to operate with low compression ratio and R134a; shell and tubes condenser and direct expansion evaporator; electronic expansion valve. Frame in polyester-painted galvanized steel. High efficiency unit: the innovative optimized compressors and the high performing heat exchangers enhance EER values up to 5,1 (CA version) and even up to 5,6 (CA-E version) at Eurovent standars conditions.

Version

CA	High efficiency version
CA-E	Premium efficiency version: Class A enhanced

Configurations

-	Basic function
D	Partial condensing heat recovery function
R	Total condensing heat recovery function

Features

HIGH EFFICIENCY

The version ´CA-E´ is characterized by efficiency beyond the ´Class A´ for Eurovent. The technological choices adopted assure the minimization of operating costs and therefore a quick payback time.

ADAPTABILITY

Adaptability at the building's cooling request thanks to the continuous capacity regulation, assured by sophisticated control's logic.

SILENT OPERATION

Extremely silent operation thanks to the accurate unit's design. Optional integral acoustic enclosure, reduces more the sound level beyond the best on market

Accessory

- Integral acoustical enclosure (type base or plus)
- VPF (Variable Primary Flow) system
- Set-up for remote connectivity with ModBus/Echelon protocol cards

Controls

W3000TE

The brand new W3000TE controller offers advanced functions and algorithms. The large format keyboard and the wide LCD display favour an easy and safe access to the machine setup and a complete view of unit's staus. The assessment and intervention on the unit is managed through a multi-level menu, with selectable user's language. The led icons immediately show the operating status of the circuits, as well as of the fans and of the water pumps (if present). An optional extra is the touch screen interface: 7.0" WVGA colour display with adjustable LED backlight and front USB port. The touch screen technology allows intuitive navigation between the various screens, safe access to the data with a three-level password protection as well as the graphic display of the performance of some monitored measurements.

The diagnostics comprises a complete alarm management system, with "black box" (via PC) and alarm log functions (via display or also PC) for a better analysis of the unit performance.

For the systems made of several units, the adjustment of the resources is performed by optional proprietary devices.

Consumption metering and performance measurement are possible as well. Supervision can be easily developed via proprietary devices or the integration in third party systems by means of the most common protocols as ModBus, Bacnet-over-IP, Echelon LonWorks, Bacnet MS/TP protocols.

Compatibility with the remote keyboard managing up to 8 units.

The presence of the programmable timer allows the creation of an operating profile containing up to 4 typical days and 10 time bands.

The control is characterized by the continuous modulation of the unit capacity, based on PID algorithms and referring to the water delivery temperature.

Optionally (VPF package), capacity modulation can be integrated with hydraulic flow modulation, thanks to inverter-driven pumps and to specific resources for the hydraulic circuit.



FOCS2-W /CA			1301	1401	3202	3602	4202	4502	4802
Power supply		V/ph/Hz	400/3/50	400/3/50	400/3/50	400/3/50	400/3/50	400/3/50	400/3/50
PERFORMANCE									
COOLING ONLY (GROSS VALUE)									
Cooling capacity	(1)	kW	306	348	844	957	1071	1145	1213
Total power input	(1)	kW	60,5	68,7	167	189	212	226	240
EER	(1)	kW/kW	5,06	5,07	5,06	5,07	5,06	5,06	5,06
ESEER	(1)	kW/kW	5,94	5,95	5,87	6,14	6,08	6,23	6,17
COOLING ONLY (EN14511 VALUE)									
Cooling capacity	(1)(2)	kW	305	347	841	954	1069	1142	1210
EER	(1)(2)	kW/kW	4,86	4,87	4,89	4,90	4,92	4,91	4,90
ESEER	(1)(2)	kW/kW	5,45	5,45	5,41	5,63	5,67	5,78	5,70
Cooling energy class			B	B	B	B	B	B	B
ENERGY EFFICIENCY									
SEASONAL EFFICIENCY IN COOLING (Reg. EU 2016/2281)									
Ambient refrigeration									
Prated,c	(7)	kW	305	347	841	954	1069	1142	1210
SEER	(7)(8)		5,55	5,58	5,88	5,89	5,89	5,97	5,90
Performance ηs	(7)(9)	%	214	215	227	228	228	231	228
EXCHANGERS									
HEAT EXCHANGER USER SIDE IN REFRIGERATION									
Water flow	(1)	l/s	14,64	16,66	40,35	45,78	51,23	54,74	58,02
Pressure drop	(1)	kPa	41,9	45,0	45,4	46,4	30,6	34,2	38,4
HEAT EXCHANGER SOURCE SIDE IN REFRIGERATION									
Water flow	(1)	l/s	17,46	19,87	48,14	54,60	61,11	65,30	69,22
Pressure drop	(1)	kPa	35,9	35,0	34,8	34,8	34,4	35,4	36,0
REFRIGERANT CIRCUIT									
Compressors nr.		N°	1	1	2	2	2	2	2
No. Circuits		N°	1	1	2	2	2	2	2
Refrigerant charge		kg	42,0	43,0	126	130	130	125	140
NOISE LEVEL									
Sound Pressure	(3)	dB(A)	79	79	80	80	80	80	80
Sound power level in cooling	(4)(5)	dB(A)	97	97	99	99	99	99	99
SIZE AND WEIGHT									
A	(6)	mm	3830	3830	4750	4750	4750	4750	4750
B	(6)	mm	900	900	1150	1150	1150	1150	1150
H	(6)	mm	1700	1700	2050	2050	2200	2200	2200
Operating weight	(6)	kg	2050	2110	5110	5400	6070	6120	6180

Notes:
1 Plant (side) cooling exchanger water (in/out) 12°C/7°C; Source (side) heat exchanger water (in/out) 30°C/35°C.
2 Values in compliance with EN14511-3:2013.
3 Average sound pressure level at 1m distance, unit in a free field on a reflective surface; non-binding value calculated from the sound power level.
4 Sound power on the basis of measurements made in compliance with ISO 9614.
5 Sound power level in cooling, indoors.
6 Unit in standard configuration/execution, without optional accessories.
7 Seasonal energy efficiency of the cooling environment [REGULATION (EU) N. 2016/2281]
8 Seasonal space heating energy index
9 Seasonal energy efficiency of the space cooling
The units highlighted in this publication contain HFC R134a [GWP_{100} 1430] fluorinated greenhouse gases.

FOCS2-W /CA			5402	6002	8103	9003	9004	9604
Power supply		V/ph/Hz	400/3/50	400/3/50	400/3/50	400/3/50	400/3/50	400/3/50
PERFORMANCE								
COOLING ONLY (GROSS VALUE)								
Cooling capacity	(1)	kW	1348	1490	2024	2236	2278	2416
Total power input	(1)	kW	267	295	400	442	451	478
EER	(1)	kW/kW	5,05	5,05	5,05	5,06	5,05	5,05
ESEER	(1)	kW/kW	6,00	6,09	6,09	6,14	6,23	6,17
COOLING ONLY (EN14511 VALUE)								
Cooling capacity	(1)(2)	kW	1344	1485	2018	2228	2273	2410
EER	(1)(2)	kW/kW	4,88	4,87	4,90	4,89	4,92	4,91
ESEER	(1)(2)	kW/kW	5,54	5,57	5,61	5,60	5,80	5,71
Cooling energy class			B	B	B	B	B	B
ENERGY EFFICIENCY								
SEASONAL EFFICIENCY IN COOLING (Reg. EU 2016/2281)								
Ambient refrigeration								
Prated,c	(7)	kW	1344	1485	-	-	-	-
SEER	(7)(8)		5,89	5,88	-	-	-	-
Performance ηs	(7)(9)	%	228	227	-	-	-	-
EXCHANGERS								
HEAT EXCHANGER USER SIDE IN REFRIGERATION								
Water flow	(1)	l/s	64,47	71,27	96,81	106,91	108,94	115,54
Pressure drop	(1)	kPa	47,4	54,6	43,7	53,3	32,3	36,3
HEAT EXCHANGER SOURCE SIDE IN REFRIGERATION								
Water flow	(1)	l/s	76,93	85,04	115,51	127,55	129,98	137,87
Pressure drop	(1)	kPa	34,5	36,6	34,6	35,8	35,0	37,0
REFRIGERANT CIRCUIT								
Compressors nr.		N°	2	2	3	3	4	4
No. Circuits		N°	2	2	3	3	4	4
Refrigerant charge		kg	164	180	269	261	267	260
NOISE LEVEL								
Sound Pressure	(3)	dB(A)	82	82	82	82	82	82
Sound power level in cooling	(4)(5)	dB(A)	101	101	102	102	102	102
SIZE AND WEIGHT								
A	(6)	mm	4850	4850	4950	4950	4650	4650
B	(6)	mm	1150	1150	1700	1700	2250	2250
H	(6)	mm	2200	2200	2150	2150	2230	2230
Operating weight	(6)	kg	6950	7090	10170	10350	14330	14390

Notes:
1 Plant (side) cooling exchanger water (in/out) 12°C/7°C; Source (side) heat exchanger water (in/out) 30°C/35°C.
2 Values in compliance with EN14511-3:2013.
3 Average sound pressure level at 1m distance, unit in a free field on a reflective surface; non-binding value calculated from the sound power level.
4 Sound power on the basis of measurements made in compliance with ISO 9614.
5 Sound power level in cooling, indoors.
6 Unit in standard configuration/execution, without optional accessories.
7 Seasonal energy efficiency of the cooling environment [REGULATION (EU) N. 2016/2281]
8 Seasonal space heating energy index
9 Seasonal energy efficiency of the space cooling
The units highlighted in this publication contain HFC R134a [GWP_{100} 1430] fluorinated greenhouse gases.
Certified data in EUROVENT

FOCS2-W / CA-E			1301	1401	1601	1801	2101	2401	2802	3202	3602
Power supply		V/ph/Hz	400/3/50	400/3/50	400/3/50	400/3/50	400/3/50	400/3/50	400/3/50	400/3/50	400/3/50
PERFORMANCE											
COOLING ONLY (GROSS VALUE)											
Cooling capacity	(1)	kW	321	365	442	506	574	649	729	884	1012
Total power input	(1)	kW	57,3	65,1	79,1	90,3	103	116	130	158	180
EER	(1)	kW/kW	5,60	5,60	5,59	5,61	5,59	5,59	5,60	5,59	5,61
ESEER	(1)	kW/kW	6,49	6,50	6,30	6,40	6,37	6,40	6,66	6,57	6,73
COOLING ONLY (EN14511 VALUE)											
Cooling capacity	(1)(2)	kW	320	363	440	504	571	646	727	880	1009
EER	(1)(2)	kW/kW	5,32	5,33	5,30	5,32	5,31	5,30	5,34	5,32	5,37
ESEER	(1)(2)	kW/kW	5,83	5,83	5,65	5,72	5,72	5,70	5,96	5,84	6,06
Cooling energy class			A	A	A	A	A	A	A	A	A
ENERGY EFFICIENCY											
SEASONAL EFFICIENCY IN COOLING (Reg. EU 2016/2281)											
Ambient refrigeration											
Prated,c	(7)	kW	320	363	440	504	571	646	727	880	1009
SEER	(7)(8)		5,88	5,90	5,88	5,89	5,88	5,89	6,16	6,08	6,31
Performance ηs	(7)(9)	%	227	228	227	228	227	228	238	235	244
EXCHANGERS											
HEAT EXCHANGER USER SIDE IN REFRIGERATION											
Water flow	(1)	l/s	15,33	17,44	21,13	24,21	27,44	31,06	34,88	42,28	48,41
Pressure drop	(1)	kPa	45,7	47,7	53,5	53,4	52,8	60,2	51,9	58,6	41,3
HEAT EXCHANGER SOURCE SIDE IN REFRIGERATION											
Water flow	(1)	l/s	18,02	20,49	24,84	28,44	32,24	36,50	40,99	49,69	56,86
Pressure drop	(1)	kPa	48,4	46,6	51,6	52,6	54,3	56,3	46,6	51,5	52,8
REFRIGERANT CIRCUIT											
Compressors nr.		N°	1	1	1	1	1	1	2	2	2
No. Circuits		N°	1	1	1	1	1	1	2	2	2
Refrigerant charge		kg	50,0	60,0	75,0	72,0	80,0	100	124	140	160
NOISE LEVEL											
Sound Pressure	(3)	dB(A)	79	78	78	78	78	78	80	80	80
Sound power level in cooling	(4)(5)	dB(A)	97	97	97	97	97	97	99	99	99
SIZE AND WEIGHT											
A	(6)	mm	4250	4250	4150	4150	4130	4350	4550	4950	5170
B	(6)	mm	900	900	900	900	900	900	1150	1150	1150
H	(6)	mm	1815	1910	1990	1990	1990	2090	2050	2200	2200
Operating weight	(6)	kg	2470	2770	3570	3750	3790	4230	5390	6460	6920

Notes:
1 Plant (side) cooling exchanger water (in/out) 12°C/7°C; Source (side) heat exchanger water (in/out) 30°C/35°C.
2 Values in compliance with EN14511-3:2013.
3 Average sound pressure level at 1m distance, unit in a free field on a reflective surface; non-binding value calculated from the sound power level.
4 Sound power on the basis of measurements made in compliance with ISO 9614.
5 Sound power level in cooling, indoors.
6 Unit in standard configuration/execution, without optional accessories.
7 Seasonal energy efficiency of the cooling environment [REGULATION (EU) N. 2016/2281]
8 Seasonal space heating energy index
9 Seasonal energy efficiency of the space cooling
The units highlighted in this publication contain HFC R134a [GWP_{100} 1430] fluorinated greenhouse gases.

FOCS2-W / CA-E			4202	4802	2701	3001	5402	7204	7804	8404
Power supply		V/ph/Hz	400/3/50	400/3/50	400/3/50	400/3/50	400/3/50	400/3/50	400/3/50	400/3/50
PERFORMANCE										
COOLING ONLY (GROSS VALUE)										
Cooling capacity	(1)	kW	1147	1299	707	781	1411	2025	2157	2294
Total power input	(1)	kW	205	232	128	141	256	361	386	410
EER	(1)	kW/kW	5,59	5,59	5,53	5,55	5,52	5,61	5,60	5,59
ESEER	(1)	kW/kW	6,64	6,66	6,38	6,41	6,66	6,75	6,64	6,65
COOLING ONLY (EN14511 VALUE)										
Cooling capacity	(1)(2)	kW	1143	1293	704	779	1407	2019	2149	2286
EER	(1)(2)	kW/kW	5,33	5,31	5,27	5,30	5,29	5,40	5,35	5,35
ESEER	(1)(2)	kW/kW	5,91	5,87	5,76	5,81	6,00	6,13	5,94	5,97
Cooling energy class			A	A	A	A	A	A	A	A
ENERGY EFFICIENCY										
SEASONAL EFFICIENCY IN COOLING (Reg. EU 2016/2281)										
Ambient refrigeration										
Prated,c	(7)	kW	1143	1293	704	779	1407	-	-	-
SEER	(7)(8)		6,18	6,16	5,89	5,90	6,23	-	-	-
Performance ηs	(7)(9)	%	239	238	228	228	241	-	-	-
EXCHANGERS										
HEAT EXCHANGER USER SIDE IN REFRIGERATION										
Water flow	(1)	l/s	54,85	62,10	33,80	37,36	67,48	96,82	103,15	109,69
Pressure drop	(1)	kPa	55,0	65,0	51,5	47,2	46,0	41,3	59,3	54,6
HEAT EXCHANGER SOURCE SIDE IN REFRIGERATION										
Water flow	(1)	l/s	64,46	72,98	39,78	43,96	79,45	113,72	121,21	128,92
Pressure drop	(1)	kPa	54,4	56,6	51,7	49,3	51,5	52,0	53,3	53,8
REFRIGERANT CIRCUIT										
Compressors nr.		N°	2	2	1	1	2	4	4	4
No. Circuits		N°	2	2	1	1	2	4	4	4
Refrigerant charge		kg	174	210	115	105	220	320	348	348
NOISE LEVEL										
Sound Pressure	(3)	dB(A)	79	79	80	80	81	82	82	82
Sound power level in cooling	(4)(5)	dB(A)	99	99	99	99	101	102	102	102
SIZE AND WEIGHT										
A	(6)	mm	4920	4920	4350	4350	5200	5220	4900	4900
B	(6)	mm	1150	1285	900	900	1285	2250	2250	2250
H	(6)	mm	2350	2430	2180	2180	2440	2305	2455	2455
Operating weight	(6)	kg	7900	8560	4760	4870	8850	13720	15850	16100

Notes:
1 Plant (side) cooling exchanger water (in/out) 12°C/7°C; Source (side) heat exchanger water (in/out) 30°C/35°C.
2 Values in compliance with EN14511-3:2013.
3 Average sound pressure level at 1m distance, unit in a free field on a reflective surface; non-binding value calculated from the sound power level.
4 Sound power on the basis of measurements made in compliance with ISO 9614.
5 Sound power level in cooling, indoors.
6 Unit in standard configuration/execution, without optional accessories.
7 Seasonal energy efficiency of the cooling environment [REGULATION (EU) N. 2016/2281]
8 Seasonal space heating energy index
9 Seasonal energy efficiency of the space cooling
The units highlighted in this publication contain HFC R134a [GWP_{100} 1430] fluorinated greenhouse gases.
Certified data in EUROVENT

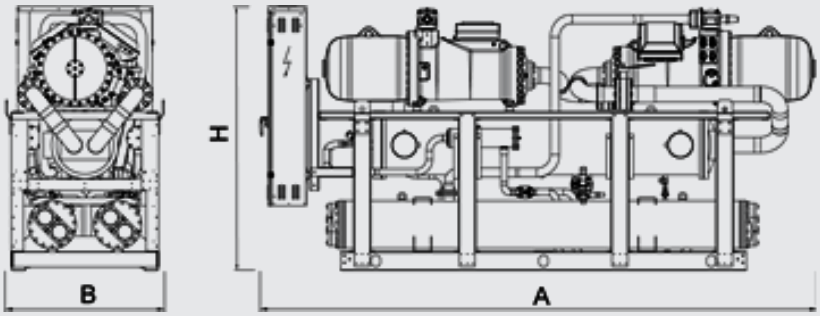

CHILLERS

FOCS3-W 0551 - 4752

Water cooled chiller
188-1693 kW



High efficiency unit for indoor installation for chilled water production. Semihermetic screw compressors optimized to operate with low compression ratio and R134a; shell and tubes condenser, flooded evaporator and electronic expansion valve. High efficiency unit thanks to the innovative optimized compressors and the high performing heat exchangers.

Version

CA	High energy efficiency units

Features

HIGH EFFICIENCY

Very high efficiency at full and partial load, at the highest market levels, thanks to the adopted technological solutions. These units ensure low operating costs and therefore a quick payback time.

ADAPTABILITY

Adaptability at the building's cooling request thanks to the continuous capacity regulation, assured by sophisticated control's logic.

MAXIMUM COMPACTNESS

Maximum compactness to achieve a very high flexibility in the design process and installation operations, offering a premium solution in case of reduced clearances or when retrofitting existing installations.

Accessory

- Touch Screen visual display
- VPF (Variable Primary Flow) system
- Set-up for remote connectivity with ModBus/Echelon protocol cards
- Several devices for condensation´s control

Controls

W3000TE

The brand new W3000TE controller offers advanced functions and algorithms. The large format keyboard and the wide LCD display favour an easy and safe access to the machine setup and a complete view of unit's staus. The assessment and intervention on the unit is managed through a multi-level menu, with selectable user's language. The led icons immediately show the operating status of the circuits, as well as of the fans and of the water pumps (if present). An optional extra is the touch screen interface: 7.0" WVGA colour display with adjustable LED backlight and front USB port. The touch screen technology allows intuitive navigation between the various screens, safe access to the data with a three-level password protection as well as the graphic display of the performance of some monitored measurements.

The diagnostics comprises a complete alarm management system, with "black box" (via PC) and alarm log functions (via display or also PC) for a better analysis of the unit performance.

For the systems made of several units, the adjustment of the resources is performed by optional proprietary devices.

Consumption metering and performance measurement are possible as well. Supervision can be easily developed via proprietary devices or the integration in third party systems by means of the most common protocols as ModBus, Bacnet-over-IP, Echelon LonWorks, Bacnet MS/TP protocols.

Compatibility with the remote keyboard managing up to 8 units.

The presence of the programmable timer allows the creation of an operating profile containing up to 4 typical days and 10 time bands.

The control is characterized by the continuous modulation of the unit capacity, based on PID algorithms and referring to the water delivery temperature.

Optionally (VPF package), capacity modulation can be integrated with hydraulic flow modulation, thanks to inverter-driven pumps and to specific resources for the hydraulic circuit.



FOCS3-W			0551	0701	0851	0951	1101	1301	1401
Power supply		V/ph/Hz	400/3/50	400/3/50	400/3/50	400/3/50	400/3/50	400/3/50	400/3/50
PERFORMANCE									
COOLING ONLY (GROSS VALUE)									
Cooling capacity	(1)	kW	188	250	306	338	384	460	524
Total power input	(1)	kW	34,9	45,9	56,1	61,2	69,8	82,5	93,0
EER	(1)	kW/kW	5,39	5,45	5,45	5,52	5,49	5,57	5,63
ESEER	(1)	kW/kW	6,84	7,09	6,55	6,85	6,80	6,73	6,90
COOLING ONLY (EN14511 VALUE)									
Cooling capacity	(1)(2)	kW	187	249	305	336	382	458	522
EER	(1)(2)	kW/kW	5,09	5,15	5,16	5,21	5,20	5,30	5,40
ESEER	(1)(2)	kW/kW	6,14	6,31	5,94	6,16	6,14	6,15	6,09
Cooling energy class			A	A	A	A	A	A	A
ENERGY EFFICIENCY									
SEASONAL EFFICIENCY IN COOLING (Reg. EU 2016/2281)									
Ambient refrigeration									
Prated,c	(7)	kW	187	249	305	336	382	458	522
SEER	(7)(8)		5,92	6,15	5,72	5,88	5,90	5,94	6,55
Performance ηs	(7)(9)	%	229	238	221	227	228	230	254
EXCHANGERS									
HEAT EXCHANGER USER SIDE IN REFRIGERATION									
Water flow	(1)	l/s	9,00	11,95	14,63	16,15	18,34	21,99	25,06
Pressure drop	(1)	kPa	42,0	48,7	49,1	52,4	52,8	47,5	39,9
HEAT EXCHANGER SOURCE SIDE IN REFRIGERATION									
Water flow	(1)	l/s	10,64	14,10	17,26	19,01	21,61	25,86	29,42
Pressure drop	(1)	kPa	56,7	57,2	56,0	58,6	57,4	54,5	44,3
REFRIGERANT CIRCUIT									
Compressors nr.		N°	1	1	1	1	1	1	1
No. Circuits		N°	1	1	1	1	1	1	1
Refrigerant charge		kg	75,0	86,0	95,0	94,0	86,0	100	110
NOISE LEVEL									
Sound Pressure	(3)	dB(A)	77	77	80	80	80	80	80
Sound power level in cooling	(4)(5)	dB(A)	95	95	98	98	98	98	98
SIZE AND WEIGHT									
A	(6)	mm	2920	2920	2920	2920	2920	2900	2900
B	(6)	mm	1180	1180	1180	1180	1180	1180	1180
H	(6)	mm	1870	1870	1870	1870	1870	1960	1970
Operating weight	(6)	kg	1740	1790	2170	2200	2260	2940	3020

Notes:
1 Plant (side) cooling exchanger water (in/out) 12°C/7°C; Source (side) heat exchanger water (in/out) 30°C/35°C.
2 Values in compliance with EN14511-3:2013.
3 Average sound pressure level at 1m distance, unit in a free field on a reflective surface; non-binding value calculated from the sound power level.
4 Sound power on the basis of measurements made in compliance with ISO 9614.
5 Sound power level in cooling, indoors.
6 Unit in standard configuration/execution, without optional accessories.
7 Seasonal energy efficiency of the cooling environment [REGULATION (EU) N. 2016/2281]
8 Seasonal space heating energy index
9 Seasonal energy efficiency of the space cooling
The units highlighted in this publication contain HFC R134a [GWP_{100} 1430] fluorinated greenhouse gases.

FOCS3-W			1651	1901	2101	2501	2602	3002	3152
Power supply		V/ph/Hz	400/3/50	400/3/50	400/3/50	400/3/50	400/3/50	400/3/50	400/3/50
PERFORMANCE									
COOLING ONLY (GROSS VALUE)									
Cooling capacity	(1)	kW	592	682	741	837	916	1062	1140
Total power input	(1)	kW	104	122	133	149	164	187	196
EER	(1)	kW/kW	5,70	5,59	5,57	5,61	5,58	5,68	5,82
ESEER	(1)	kW/kW	7,00	6,90	6,89	6,94	7,35	7,43	7,46
COOLING ONLY (EN14511 VALUE)									
Cooling capacity	(1)(2)	kW	590	679	739	834	913	1058	1137
EER	(1)(2)	kW/kW	5,41	5,33	5,34	5,37	5,37	5,42	5,62
ESEER	(1)(2)	kW/kW	6,35	6,10	6,19	6,23	6,44	6,56	6,80
Cooling energy class			A	A	A	A	A	A	A
ENERGY EFFICIENCY									
SEASONAL EFFICIENCY IN COOLING (Reg. EU 2016/2281)									
Ambient refrigeration									
Prated,c	(7)	kW	590	679	739	834	913	1058	1137
SEER	(7)(8)		6,16	6,25	6,39	6,31	6,34	6,47	7,03
Performance ηs	(7)(9)	%	239	242	248	244	246	251	273
EXCHANGERS									
HEAT EXCHANGER USER SIDE IN REFRIGERATION									
Water flow	(1)	l/s	28,30	32,59	35,45	40,03	43,80	50,79	54,53
Pressure drop	(1)	kPa	50,9	42,0	42,7	42,8	40,0	51,5	37,4
HEAT EXCHANGER SOURCE SIDE IN REFRIGERATION									
Water flow	(1)	l/s	33,17	38,31	41,69	47,02	51,49	59,55	63,73
Pressure drop	(1)	kPa	55,2	59,7	45,3	47,6	44,0	53,8	31,6
REFRIGERANT CIRCUIT									
Compressors nr.		N°	1	1	1	1	2	2	2
No. Circuits		N°	1	1	1	1	2	2	2
Refrigerant charge		kg	112	121	147	182	210	249	270
NOISE LEVEL									
Sound Pressure	(3)	dB(A)	80	80	82	82	81	81	81
Sound power level in cooling	(4)(5)	dB(A)	98	98	100	100	100	100	100
SIZE AND WEIGHT									
A	(6)	mm	2900	2930	2980	2990	4430	4430	4440
B	(6)	mm	1180	1180	1190	1280	1270	1270	1270
H	(6)	mm	1960	2050	2100	2200	2210	2210	2280
Operating weight	(6)	kg	3150	3270	3570	3960	6200	6430	7080

Notes:
1 Plant (side) cooling exchanger water (in/out) 12°C/7°C; Source (side) heat exchanger water (in/out) 30°C/35°C.
2 Values in compliance with EN14511-3:2013.
3 Average sound pressure level at 1m distance, unit in a free field on a reflective surface; non-binding value calculated from the sound power level.
4 Sound power on the basis of measurements made in compliance with ISO 9614.
5 Sound power level in cooling, indoors.
6 Unit in standard configuration/execution, without optional accessories.
7 Seasonal energy efficiency of the cooling environment [REGULATION (EU) N. 2016/2281]
8 Seasonal space heating energy index
9 Seasonal energy efficiency of the space cooling
The units highlighted in this publication contain HFC R134a [GWP_{100} 1430] fluorinated greenhouse gases.

FOCS3-W			3502	3652	4002	4102	4502	4602	4752
Power supply		V/ph/Hz	400/3/50	400/3/50	400/3/50	400/3/50	400/3/50	400/3/50	400/3/50
PERFORMANCE									
COOLING ONLY (GROSS VALUE)									
Cooling capacity	(1)	kW	1218	1303	1382	1450	1522	1614	1693
Total power input	(1)	kW	214	225	242	253	268	284	292
EER	(1)	kW/kW	5,69	5,80	5,72	5,74	5,68	5,68	5,80
ESEER	(1)	kW/kW	7,24	7,32	7,28	7,27	7,12	7,39	7,39
COOLING ONLY (EN14511 VALUE)									
Cooling capacity	(1)(2)	kW	1214	1299	1377	1445	1517	1609	1688
EER	(1)(2)	kW/kW	5,43	5,60	5,46	5,50	5,42	5,45	5,54
ESEER	(1)(2)	kW/kW	6,41	6,67	6,47	6,49	6,36	6,58	6,58
Cooling energy class			A	A	A	A	-	-	-
ENERGY EFFICIENCY									
SEASONAL EFFICIENCY IN COOLING (Reg. EU 2016/2281)									
Ambient refrigeration									
Prated,c	(7)	kW	1214	1299	1377	1445	1517	1609	1688
SEER	(7)(8)		6,34	6,89	6,43	6,50	6,35	6,50	6,75
Performance ηs	(7)(9)	%	246	267	249	252	246	252	262
EXCHANGERS									
HEAT EXCHANGER USER SIDE IN REFRIGERATION									
Water flow	(1)	l/s	58,23	62,33	66,11	69,33	72,76	77,20	80,94
Pressure drop	(1)	kPa	51,4	39,8	50,4	46,7	51,5	42,5	46,7
HEAT EXCHANGER SOURCE SIDE IN REFRIGERATION									
Water flow	(1)	l/s	68,26	72,87	77,45	81,18	85,33	90,51	94,64
Pressure drop	(1)	kPa	56,2	33,7	52,9	49,5	54,7	53,1	58,0
REFRIGERANT CIRCUIT									
Compressors nr.		N°	2	2	2	2	2	2	2
No. Circuits		N°	2	2	2	2	2	2	2
Refrigerant charge		kg	270	280	280	288	297	341	341
NOISE LEVEL									
Sound Pressure	(3)	dB(A)	81	81	81	82	82	82	82
Sound power level in cooling	(4)(5)	dB(A)	100	100	100	101	102	102	102
SIZE AND WEIGHT									
A	(6)	mm	4470	4470	4470	4565	4650	5270	5270
B	(6)	mm	1270	1320	1270	1320	1320	1320	1320
H	(6)	mm	2250	2330	2280	2380	2380	2380	2380
Operating weight	(6)	kg	7160	7560	7280	7850	7940	8420	8950

Notes:
1 Plant (side) cooling exchanger water (in/out) 12°C/7°C; Source (side) heat exchanger water (in/out) 30°C/35°C.
2 Values in compliance with EN14511-3:2013.
3 Average sound pressure level at 1m distance, unit in a free field on a reflective surface; non-binding value calculated from the sound power level.
4 Sound power on the basis of measurements made in compliance with ISO 9614.
5 Sound power level in cooling, indoors.
6 Unit in standard configuration/execution, without optional accessories.
7 Seasonal energy efficiency of the cooling environment [REGULATION (EU) N. 2016/2281]
8 Seasonal space heating energy index
9 Seasonal energy efficiency of the space cooling
The units highlighted in this publication contain HFC R134a [GWP_{100} 1430] fluorinated greenhouse gases.
Certified data in EUROVENT

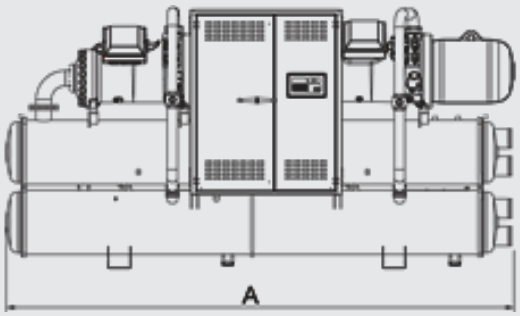

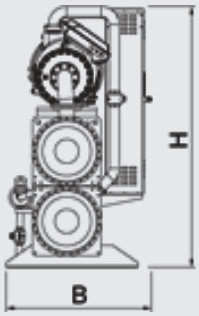

CHILLERS

i-FX-W (1+i) 1402 - 4652

High efficiency water cooled chiller 488-1784 kW



Version

CA	High energy efficiency units

Features

HIGH EFFICIENCY

Unit with high efficiency and reduced energy consumption, thanks to the inverter technology, contributing to lower operating costs and therefore achieving a quick return on investment.

FLEXIBILITY

Unit featured by remarkable application flexibility thanks to the inverter tecnology which allows to obtain, taking in consideration the cooling capacity needed, the best result about costs/performances and maximum efficiency.

TOTAL VERSATILITY

Unit designed gathering in a single circuit a compressor with step regulation and one working with inverter, in order to guarantee the best answer to plant necessities both at full and at part loads.

MAXIMUM COMPACTNESS

Maximum compactness to achieve a very high flexibility in the design process and installation operations, offering a premium solution in case of reduced clearances or when retrofitting existing installations.

Accessory

- Touch Screen visual display
- VPF (Variable Primary Flow) system
- Set-up for remote connectivity with ModBus/Echelon protocol cards
- Several devices for condensation´s control

Single circuit indoor unit for the production of chilled water, with fixed speed and variable speed (Inverter Driven) screw compressors optimized for R134a, electronic expansion valve, high performing shell and tube condenser and shell and tube flooded evaporator, both designed and produced by Climaveneta. These technological solutions enhance the EER values over 5,7 at Eurovent standard conditions.
The resulting unit is extremely compact, thanks to the strategic layout, designed without base, frame and panels.

Controls

W3000TE

The brand new W3000TE controller offers advanced functions and algorithms. The large format keyboard and the wide LCD display favour an easy and safe access to the machine setup and a complete view of unit's staus. The assessment and intervention on the unit is managed through a multi-level menu, with selectable user's language. The led icons immediately show the operating status of the circuits, as well as of the fans and of the water pumps (if present). An optional extra is the touch screen interface: 7.0” WVGA colour display with adjustable LED backlight and front USB port. The touch screen technology allows intuitive navigation between the various screens, safe access to the data with a three-level password protection as well as the graphic display of the performance of some monitored measurements.
The diagnostics comprises a complete alarm management system, with “black box” (via PC) and alarm log functions (via display or also PC) for a better analysis of the unit performance.
For the systems made of several units, the adjustment of the resources is performed by optional proprietary devices.
Consumption metering and performance measurement are possible as well. Supervision can be easily developed via proprietary devices or the integration in third party systems by means of the most common protocols as ModBus, Bacnet-over-IP, Echelon LonWorks, Bacnet MS/TP protocols.
Compatibility with the remote keyboard managing up to 8 units.
The presence of the programmable timer allows the creation of an operating profile containing up to 4 typical days and 10 time bands.
The control is characterized by the continuous modulation of the unit capacity, based on PID algorithms and referring to the water delivery temperature.
Optionally (VPF package), capacity modulation can be integrated with hydraulic flow modulation, thanks to inverter-driven pumps and to specific resources for the hydraulic circuit.



i-FX-W (1+i)			1402	1752	1902	2152	2602
Power supply		V/ph/Hz	400/3/50	400/3/50	400/3/50	400/3/50	400/3/50
PERFORMANCE							
COOLING ONLY (GROSS VALUE)							
Cooling capacity	(1)	kW	488	610	661	752	917
Total power input	(1)	kW	87,6	107	116	132	161
EER	(1)	kW/kW	5,57	5,70	5,69	5,68	5,68
ESEER	(1)	kW/kW	8,52	8,57	8,47	8,62	8,63
COOLING ONLY (EN14511 VALUE)							
Cooling capacity	(1)(2)	kW	487	608	659	750	914
EER	(1)(2)	kW/kW	5,37	5,49	5,48	5,47	5,48
ESEER	(1)(2)	kW/kW	7,46	7,51	7,40	7,53	7,53
Cooling energy class			-	-	-	-	-
ENERGY EFFICIENCY							
SEASONAL EFFICIENCY IN COOLING (Reg. EU 2016/2281)							
Ambient refrigeration							
Prated,c	(7)	kW	487	608	659	750	914
SEER	(7)(8)		7,64	7,62	7,53	7,65	7,72
Performance ηs	(7)(9)	%	298	297	293	298	301
EXCHANGERS							
HEAT EXCHANGER USER SIDE IN REFRIGERATION							
Water flow	(1)	l/s	23,34	29,16	31,62	35,96	43,84
Pressure drop	(1)	kPa	30,5	34,7	33,8	33,2	37,1
HEAT EXCHANGER SOURCE SIDE IN REFRIGERATION							
Water flow	(1)	l/s	27,44	34,18	37,07	42,16	51,41
Pressure drop	(1)	kPa	37,4	35,4	41,7	41,5	38,7
REFRIGERANT CIRCUIT							
Compressors nr.		N°	2	2	2	2	2
No. Circuits		N°	1	1	1	1	1
Refrigerant charge		kg	136	170	188	212	264
NOISE LEVEL							
Sound Pressure	(3)	dB(A)	80	79	79	81	81
Sound power level in cooling	(4)(5)	dB(A)	98	98	98	100	100
SIZE AND WEIGHT							
A	(6)	mm	2950	3350	3350	3350	4500
B	(6)	mm	1380	1450	1450	1480	1420
H	(6)	mm	2000	2270	2270	2270	2270
Operating weight	(6)	kg	3340	4190	4280	4680	6420

Notes:
1 Plant (side) cooling exchanger water (in/out) 12°C/7°C; Source (side) heat exchanger water (in/out) 30°C/35°C.
2 Values in compliance with EN14511-3:2013.
3 Average sound pressure level at 1m distance, unit in a free field on a reflective surface; non-binding value calculated from the sound power level.
4 Sound power on the basis of measurements made in compliance with ISO 9614.
5 Sound power level in cooling, indoors.
6 Unit in standard configuration/execution, without optional accessories.
7 Seasonal energy efficiency of the cooling environment [REGULATION (EU) N. 2016/2281]
8 Seasonal space heating energy index
9 Seasonal energy efficiency of the space cooling
The units highlighted in this publication contain HFC R134a [GWP_{100} 1430] fluorinated greenhouse gases.

i-FX-W (1+i)			3002	3402	3852	4252	4652
Power supply		V/ph/Hz	400/3/50	400/3/50	400/3/50	400/3/50	400/3/50
PERFORMANCE							
COOLING ONLY (GROSS VALUE)							
Cooling capacity	(1)	kW	1049	1189	1351	1486	1637
Total power input	(1)	kW	184	206	233	260	289
EER	(1)	kW/kW	5,71	5,76	5,79	5,71	5,66
ESEER	(1)	kW/kW	8,55	8,56	8,60	8,44	8,39
COOLING ONLY (EN14511 VALUE)							
Cooling capacity	(1)(2)	kW	1046	1186	1348	1482	1632
EER	(1)(2)	kW/kW	5,52	5,58	5,62	5,52	5,47
ESEER	(1)(2)	kW/kW	7,59	7,65	7,74	7,49	7,44
Cooling energy class			-	-	-	-	-
ENERGY EFFICIENCY							
SEASONAL EFFICIENCY IN COOLING (Reg. EU 2016/2281)							
Ambient refrigeration							
Prated,c	(7)	kW	1046	1186	1348	1482	1632
SEER	(7)(8)		7,84	7,77	7,89	7,55	7,60
Performance ηs	(7)(9)	%	306	303	307	294	296
EXCHANGERS							
HEAT EXCHANGER USER SIDE IN REFRIGERATION							
Water flow	(1)	l/s	50,15	56,88	64,63	71,06	78,30
Pressure drop	(1)	kPa	37,5	31,9	30,9	37,3	45,3
HEAT EXCHANGER SOURCE SIDE IN REFRIGERATION							
Water flow	(1)	l/s	58,76	66,56	75,57	83,27	91,86
Pressure drop	(1)	kPa	30,0	33,3	29,6	35,9	29,5
REFRIGERANT CIRCUIT							
Compressors nr.		N°	2	2	2	2	2
No. Circuits		N°	1	1	1	1	1
Refrigerant charge		kg	289	328	372	410	450
NOISE LEVEL							
Sound Pressure	(3)	dB(A)	81	80	80	82	82
Sound power level in cooling	(4)(5)	dB(A)	100	100	100	102	102
SIZE AND WEIGHT							
A	(6)	mm	4500	4600	4650	4650	4650
B	(6)	mm	1420	1450	1510	1510	1510
H	(6)	mm	2270	2350	2500	2500	2500
Operating weight	(6)	kg	7260	7960	8490	8580	8970

Notes:
1 Plant (side) cooling exchanger water (in/out) 12°C/7°C; Source (side) heat exchanger water (in/out) 30°C/35°C.
2 Values in compliance with EN14511-3:2013.
3 Average sound pressure level at 1m distance, unit in a free field on a reflective surface; non-binding value calculated from the sound power level.
4 Sound power on the basis of measurements made in compliance with ISO 9614.
5 Sound power level in cooling, indoors.
6 Unit in standard configuration/execution, without optional accessories.
7 Seasonal energy efficiency of the cooling environment [REGULATION (EU) N. 2016/2281]
8 Seasonal space heating energy index
9 Seasonal energy efficiency of the space cooling
The units highlighted in this publication contain HFC R134a [GWP_{100} 1430] fluorinated greenhouse gases.
Certified data in EUROVENT

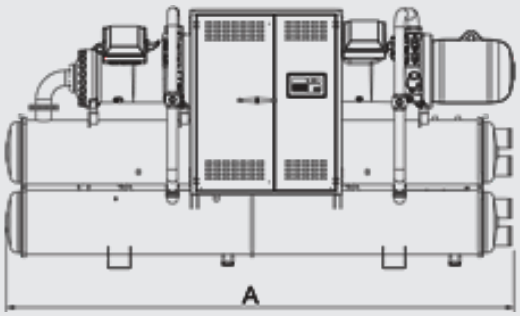

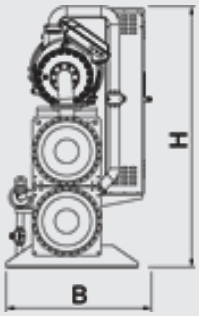

CHILLERS

TECS2-W HFO 0351 - 1414

High efficiency water cooled chiller 340-1364 kW



Version	
HC	High Condensing

Configurations	
-	Basic function
H	Function with heat pump, reversible on hydraulic side

Features

HFO REFRIGERANT

4th generation refrigerant HFO 1234ze, with negligible greenhouse effect in comparison with traditional HFC refrigerants (Global Warming Potential GWP of HFO 1234ze < 1, GWP of R134a = 1300 as per IPCC rev. 5th) and zero impact on the ozone layer.

VERY HIGH EFFICIENCY

Very high efficiency at full and partial load, to top market levels, thanks to adopted technological solutions: large capacity modulation and expanded exchanger, offering minimum running costs of the unit in real working conditions.

HEAT PUMP FUNCTION

Heat pump function water circuit side reversal

EXTREMELY SILENT OPERATION

Extremely silent operation in line with the best on the market, and highly reduced vibrations

LOW INRUSH CURRENTS

Reduced breakaway starting currents thanks to the revolutionary centrifugal compressor.

Accessory

- Integral acoustical enclosure (type base or plus)
- VPF (Variable Primary Flow) system
- Several devices for condensation´s control
- Leak detector
- Set-up for remote connectivity with ModBus/Echelon protocol cards

Indoor unit for the production of chilled water featuring centrifugal compressors oil-free, with refrigerant HFO (1234-ze), electronic regulation valve, shell and tube condenser and shell and tube flooded evaporator.
Base and supporting structure and panels are of galvanized epoxy powder coated steel with increased thickness.
Flexible and reliable unit; it easily adapts itself to different thermal load conditions thanks to the precise thermoregulation together with the use of inverter technology. The compressor is radically innovative: magnetic bearings and digital rotor speed control allow partial load efficiency levels to be reached that were hither to impossible.

Controls

W3000TE

The brand new W3000TE controller offers advanced functions and algorithms. The large format keyboard and the wide LCD display favour an easy and safe access to the machine setup and a complete view of unit's staus. The assessment and intervention on the unit is managed through a multi-level menu, with selectable user's language. The led icons immediately show the operating status of the circuits, as well as of the fans and of the water pumps (if present). An optional extra is the touch screen interface: 7.0" WVGA colour display with adjustable LED backlight and front USB port. The touch screen technology allows intuitive navigation between the various screens, safe access to the data with a three-level password protection as well as the graphic display of the performance of some monitored measurements.
The diagnostics comprises a complete alarm management system, with "black box" (via PC) and alarm log functions (via display or also PC) for a better analysis of the unit performance.
For the systems made of several units, the adjustment of the resources is performed by optional proprietary devices.
Consumption metering and performance measurement are possible as well. Supervision can be easily developed via proprietary devices or the integration in third party systems by means of the most common protocols as ModBus, Bacnet-over-IP, Echelon LonWorks, Bacnet MS/TP protocols.
Compatibility with the remote keyboard managing up to 8 units.
The presence of the programmable timer allows the creation of an operating profile containing up to 4 typical days and 10 time bands.
The control is characterized by the continuous modulation of the unit capacity, based on PID algorithms and referring to the water delivery temperature.
Optionally (VPF package), capacity modulation can be integrated with hydraulic flow modulation, thanks to inverter-driven pumps and to specific resources for the hydraulic circuit.



TECS2-W HFO / HC			0351	0712	1053	1414
Power supply		V/ph/Hz	400/3/50	400/3/50	400/3/50	400/3/50
PERFORMANCE						
COOLING ONLY (GROSS VALUE)						
Cooling capacity	(1)	kW	340	676	1015	1364
Total power input	(1)	kW	63,0	127	190	251
EER	(1)	kW/kW	5,39	5,34	5,35	5,43
ESEER	(1)	kW/kW	9,01	9,40	9,32	9,51
COOLING ONLY (EN14511 VALUE)						
Cooling capacity	(1)(2)	kW	339	674	1013	1361
EER	(1)(2)	kW/kW	5,18	5,17	5,19	5,29
ESEER	(1)(2)	kW/kW	7,83	8,12	8,22	8,50
Cooling energy class			A	A	A	A
ENERGY EFFICIENCY						
SEASONAL EFFICIENCY IN COOLING (Reg. EU 2016/2281)						
Ambient refrigeration						
Prated,c	(7)	kW	339	674	1013	1361
SEER	(7)(8)		8,20	8,22	8,36	8,76
Performance ηs	(7)(9)	%	320	321	326	342
EXCHANGERS						
HEAT EXCHANGER USER SIDE IN REFRIGERATION						
Water flow	(1)	l/s	16,24	32,33	48,54	65,22
Pressure drop	(1)	kPa	32,9	29,0	31,1	33,1
HEAT EXCHANGER SOURCE SIDE IN REFRIGERATION						
Water flow	(1)	l/s	19,19	38,25	57,42	76,97
Pressure drop	(1)	kPa	40,8	39,6	32,0	23,0
REFRIGERANT CIRCUIT						
Compressors nr.		N°	1	2	3	4
No. Circuits		N°	1	1	1	1
Refrigerant charge		kg	95,0	230	360	390
NOISE LEVEL						
Sound Pressure	(3)	dB(A)	74	76	77	78
Sound power level in cooling	(4)(5)	dB(A)	92	94	96	97
SIZE AND WEIGHT						
A	(6)	mm	2990	3490	4990	5450
B	(6)	mm	950	1300	1300	1300
H	(6)	mm	1900	1800	1800	1990
Operating weight	(6)	kg	1570	3010	4380	5240

Notes:
1 Plant (side) cooling exchanger water (in/out) 12°C/7°C; Source (side) heat exchanger water (in/out) 30°C/35°C.
2 Values in compliance with EN14511-3:2013.
3 Average sound pressure level at 1m distance, unit in a free field on a reflective surface; non-binding value calculated from the sound power level.
4 Sound power on the basis of measurements made in compliance with ISO 9614.
5 Sound power level in cooling, indoors.
6 Unit in standard configuration/execution, without optional accessories.
7 Seasonal energy efficiency of the cooling environment [REGULATION (EU) N. 2016/2281]
8 Seasonal space heating energy index
9 Seasonal energy efficiency of the space cooling
The units highlighted in this publication contain HFC HFO-1234ze [GWP_{100} 7] fluorinated greenhouse gases.
Certified data in EUROVENT

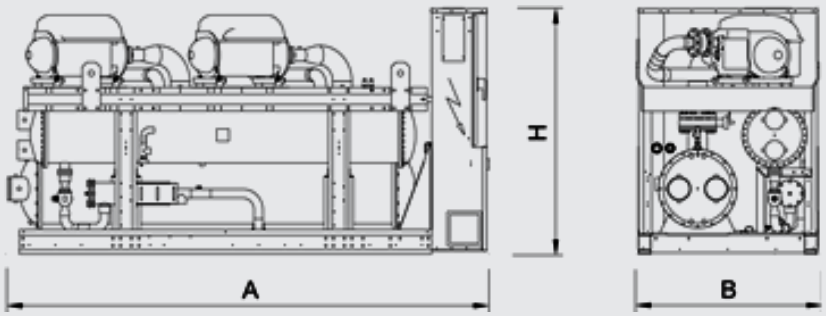

CHILLERS

TX-W 1A00 - 6D00

High efficiency water cooled chiller 246-4191 kW



Indoor unit for the production of chilled water featuring centrifugal compressors oil-free, with R134a, electronic regulation valve, shell and tube condenser and shell and tube flooded evaporator.
Base and supporting structure and panels are of galvanized epoxy powder coated steel with increased thickness.
Flexible and reliable unit; it easily adapts itself to different thermal load conditions thanks to the precise thermoregulation together with the use of inverter technology. The compressor is radically innovative: magnetic bearings and digital rotor speed control allow partial load efficiency levels to be reached that were hither to impossible.

Configurations

- Basic function

Features

NO COMPROMISE
Large availability in the combinations of the compressors (up to 6 compressors on the same unit), plus the flexibility in the choice of the heat exchangers can satisfy each specific installation and design requirements: the highest full load efficiency, the best initial investment, an unrivaled seasonal efficiency, an operating range suitable for applications in systems operating at high or low condensation (dry coolers or cooling towers)
VERY HIGH EFFICIENCY
Very high efficiency at full and partial load, to top market levels, thanks to adopted technological solutions: large capacity modulation and expanded exchanger, offering minimum running costs of the unit in real working conditions.
FLEXIBLE COMPOSITION
Choice between horizontal or diagonal arrangement of the heat exchangers, with dimensions that favor the compact overall dimensions in height or plant, water connections to the evaporator and condenser that can be deployed on the right or left, to fit for all applications
ADAPTABILITY
Adaptability at the building's heating request thanks to the continuous capacity regulation, assured by sophisticated control's logic.
LOW INRUSH CURRENTS
Reduced breakaway starting currents thanks to the revolutionary centrifugal compressor.
EXTREMELY SILENT OPERATION
Extremely silent operation in line with the best on the market, and highly reduced vibrations

Accessory

- Integral acoustical enclosure (type base or plus)
- VPF (Variable Primary Flow) system
- Set-up for remote connectivity with ModBus/Echelon protocol cards
- Several devices for condensation´s control
- Fast restart
- filters kit for conformity to EN 61000-6-3 (residential ambients)

Controls

W3000TE
The W3000TE controller offers advanced functions and algorithms.
For the TX-W family, dedicated control logics, named as a whole CX4, have been implemented to take all the advantages of the variable speed centrifugal compressor complete control to maximize the unit performance in all working conditions.
KIPlink - Keyboard In Your Pocket - is the innovative user interface based on WiFi technology that allows one to operate on the unit directly from the smartphone or tablet. Using KIPlink, it is possible to turn the unit on and off, adjust the set-point, plot the main operating variables, monitor in detail the status of the refrigerant circuits, the compressors and display and reset the possible alarms. Secure access to data is guaranteed by three different password levels (user, service, manufacturer).
In the place of or in addition to KIPlink, the touchscreen interface with a 13" colour display is available. The screens have been developed with graphics created exclusively for the TX-W family. Specific screens allow a closer view of all the variables related to the compressors, the heat exchangers and the refrigerant circuit. It is also possible to analyse the monitored and measured variables in graphical form.
The temperature control is characterized by the continuous capacity modulation, based on PID algorithms and related to the leaving water temperature, with adjustment on the neutral areas.
The diagnostics includes a complete alarm management, with the "black box" (via PC) and registration of alarms (via display or PC) for a better analysis of the unit performance.
Supervision is achievable through various options, with proprietary devices or with the integration in third party systems by means of the most common communication protocols (ModBus, BACnet-over-IP, Echelon LonWorks, BACnet MS / TP). Connection with remote touchscreen is available.
The presence of programmable timer allows the creation of an operating profile containing up to 4 days and 10 type bands, with automatic transmission from summer time to winter time.
For systems consisting of multiple units, the management of the resources is possible via optional proprietary devices.
Optionally (VPF package), capacity modulation can be integrated with hydraulic flow modulation, thanks to inverter-driven pumps and to specific resources for the hydraulic circuit.

TX-W			1A00	1B00	1B1A	1B2A	1B3A	1C00	1C1A	1C1B	1C3B
Power supply		V/ph/Hz	400/3/50	400/3/50	400/3/50	400/3/50	400/3/50	400/3/50	400/3/50	400/3/50	400/3/50
PERFORMANCE											
COOLING ONLY (GROSS VALUE)											
Cooling capacity range	(1)	kW	246÷357	346÷494	587÷850	829÷1201	1096÷1566	401÷572	649÷927	744÷1063	1438÷2054
EER (up to)	(1)	kW/kW	6,22	6,31	6,25	6,08	6,26	6,45	6,34	6,36	6,38
ESEER (up to)	(1)	kW/kW	9,80	9,42	9,99	9,57	9,84	9,92	9,97	9,96	9,84
COOLING ONLY (EN14511 VALUE)											
Cooling capacity	(1)(2)	kW	246	367	586	827	1157	464	649	746	2045
EER	(1)(2)	kW/kW	6,06	6,06	6,07	5,94	6,02	6,14	6,16	6,18	5,36
ESEER	(1)(2)	kW/kW	8,85	8,46	8,88	8,68	8,67	8,84	8,86	8,84	-
Cooling energy class			A	A	A	A	A	A	A	A	-
ENERGY EFFICIENCY											
SEASONAL EFFICIENCY IN COOLING (Reg. EU 2016/2281)											
Ambient refrigeration											
Prated,c	(8)	kW	246	367	586	827	1157	464	649	746	-
SEER	(8)(9)		8,99	8,70	8,91	8,89	8,79	9,07	8,99	8,92	-
Performance ηs	(8)(10)	%	352	340	348	348	343	355	352	349	-
EXCHANGERS											
HEAT EXCHANGER USER SIDE IN REFRIGERATION											
Water flow	(1)	l/s	17,05	23,64	40,65	57,45	74,90	27,36	44,33	50,85	98,24
Pressure drop	(1)	kPa	40,2	40,0	54,6	45,3	64,0	37,3	53,2	53,3	75,0
HEAT EXCHANGER SOURCE SIDE IN REFRIGERATION											
Water flow	(1)	l/s	20,25	27,86	48,12	68,38	88,63	32,02	52,19	59,73	115,33
Pressure drop	(1)	kPa	39,0	38,9	45,9	43,6	50,9	37,2	43,8	43,0	50,0
REFRIGERANT CIRCUIT											
Compressors nr.		N°	1	1	2	3	4	1	2	2	4
No. Circuits		N°	1	1	1	1	1	1	1	1	1
Refrigerant charge		kg	160	175	315	580	690	185	330	340	940
NOISE LEVEL											
Sound Pressure	(3)	dB(A)	75	76	76	78	78	77	77	77	79
Sound power level in cooling	(4)(5)	dB(A)	93	94	95	97	98	95	96	96	99
SIZE AND WEIGHT											
A	(6)(7)	mm	2910	2910	3050	3710	4690	2910	3050	3050	4720
B	(6)(7)	mm	1000	1000	1620	1710	1890	1000	1620	1620	1890
H	(6)(7)	mm	1950	1950	2190	2260	2400	1950	2190	2190	2400
Operating weight	(6)(7)	kg	2690	2800	5200	7590	9320	2880	5280	5410	11010

Notes:
1 Plant (side) cooling exchanger water (in/out) 12°C/7°C; Source (side) heat exchanger water (in/out) 30°C/35°C.
2 Values in compliance with EN14511-3:2013.
3 Average sound pressure level at 1m distance, unit in a free field on a reflective surface; non-binding value calculated from the sound power level.
4 Sound power on the basis of measurements made in compliance with ISO 9614.
5 Sound power level in cooling, indoors.
6 Unit in standard configuration/execution, without optional accessories.
7 Lay-out with diagonal exchangers in units with 1, 2, 3 and 4 compressors; lay-out with horizontal exchangers in units with 5 and 6 compressors.
8 Seasonal energy efficiency of the cooling environment [REGULATION (EU) N. 2016/2281]
9 Seasonal space heating energy index
10 Seasonal energy efficiency of the space cooling
The units highlighted in this publication contain HFC R134a [GWP_{100} 1430] fluorinated greenhouse gases.

TX-W			1D00	1D1A	1D1B	1D1C	1D2C	1D3C	1D4C	1D5C	2A00
Power supply		V/ph/Hz	400/3/50	400/3/50	400/3/50	400/3/50	400/3/50	400/3/50	400/3/50	400/3/50	400/3/50
PERFORMANCE											
COOLING ONLY (GROSS VALUE)											
Cooling capacity range	(1)	kW	596÷744	758÷1098	852÷1235	1052÷1315	1274÷1901	1980÷2475	2461÷3076	2942÷3677	499÷713
EER (up to)	(1)	kW/kW	6,27	6,23	6,25	6,34	6,43	6,37	6,48	6,56	6,16
ESEER (up to)	(1)	kW/kW	9,59	9,88	9,91	10,20	10,20	10,10	10,30	10,40	10,00
COOLING ONLY (EN14511 VALUE)											
Cooling capacity	(1)(2)	kW	667	758	864	1077	1285	2463	3060	3659	526
EER	(1)(2)	kW/kW	5,97	5,97	6,04	6,04	6,20	5,57	5,60	5,67	5,94
ESEER	(1)(2)	kW/kW	8,12	8,57	8,71	8,70	8,94	-	-	-	8,87
Cooling energy class			A	A	A	A	A	-	-	-	A
ENERGY EFFICIENCY											
SEASONAL EFFICIENCY IN COOLING (Reg. EU 2016/2281)											
Ambient refrigeration											
Prated,c	(8)	kW	667	758	864	1077	1285	-	-	-	526
SEER	(8)(9)		8,31	8,76	8,73	8,65	9,10	-	-	-	8,90
Performance ηs	(8)(10)	%	324	343	341	338	356	-	-	-	348
EXCHANGERS											
HEAT EXCHANGER USER SIDE IN REFRIGERATION											
Water flow	(1)	l/s	35,60	52,50	59,08	62,90	90,92	118,35	147,10	175,86	34,12
Pressure drop	(1)	kPa	49,3	61,8	63,3	61,5	67,5	79,9	92,5	84,2	44,5
HEAT EXCHANGER SOURCE SIDE IN REFRIGERATION											
Water flow	(1)	l/s	41,31	61,42	69,05	73,35	106,01	138,13	171,36	204,55	40,55
Pressure drop	(1)	kPa	48,7	51,3	51,3	49,5	56,8	51,9	60,9	70,5	47,9
REFRIGERANT CIRCUIT											
Compressors nr.		N°	1	2	2	2	3	4	5	6	2
No. Circuits		N°	1	1	1	1	1	1	1	1	1
Refrigerant charge		kg	190	340	350	360	685	975	1205	1510	230
NOISE LEVEL											
Sound Pressure	(3)	dB(A)	78	78	78	78	79	79	79	80	76
Sound power level in cooling	(4)(5)	dB(A)	96	97	97	97	99	99	100	101	95
SIZE AND WEIGHT											
A	(6)(7)	mm	2910	3050	3050	3050	4690	4720	5700	6610	2910
B	(6)(7)	mm	1000	1620	1620	1620	1660	1890	2350	2400	1560
H	(6)(7)	mm	1950	2190	2190	2190	2260	2400	2400	2450	2190
Operating weight	(6)(7)	kg	2950	5350	5340	5420	8810	11410	15330	20580	4070

Notes:
1 Plant (side) cooling exchanger water (in/out) 12°C/7°C; Source (side) heat exchanger water (in/out) 30°C/35°C.
2 Values in compliance with EN14511-3:2013.
3 Average sound pressure level at 1m distance, unit in a free field on a reflective surface; non-binding value calculated from the sound power level.
4 Sound power on the basis of measurements made in compliance with ISO 9614.
5 Sound power level in cooling, indoors.
6 Unit in standard configuration/execution, without optional accessories.
7 Lay-out with diagonal exchangers in units with 1, 2, 3 and 4 compressors; lay-out with horizontal exchangers in units with 5 and 6 compressors.
8 Seasonal energy efficiency of the cooling environment [REGULATION (EU) N. 2016/2281]
9 Seasonal space heating energy index
10 Seasonal energy efficiency of the space cooling
The units highlighted in this publication contain HFC R134a [GWP_{100} 1430] fluorinated greenhouse gases.

TX-W			2B00	2B1A	2B2A	2B3A	2C00	2C1A	2C1B	2D00	2D1B
Power supply		V/ph/Hz	400/3/50	400/3/50	400/3/50	400/3/50	400/3/50	400/3/50	400/3/50	400/3/50	400/3/50
PERFORMANCE											
COOLING ONLY (GROSS VALUE)											
Cooling capacity range	(1)	kW	681÷987	938÷1341	938÷1702	1444÷2063	799÷1141	1054÷1506	1150÷1642	995÷1485	1451÷1988
EER (up to)	(1)	kW/kW	6,29	6,10	6,30	6,33	6,42	6,44	6,46	6,22	6,35
ESEER (up to)	(1)	kW/kW	9,95	9,48	9,82	9,91	10,30	10,00	10,00	10,20	10,00
COOLING ONLY (EN14511 VALUE)											
Cooling capacity	(1)(2)	kW	685	987	1257	2052	925	1135	1237	993	1464
EER	(1)(2)	kW/kW	6,10	5,90	6,03	5,16	6,09	6,18	6,20	5,89	6,09
ESEER	(1)(2)	kW/kW	8,75	8,61	8,54	-	8,93	8,69	8,78	8,85	8,50
Cooling energy class			A	A	A	-	A	A	A	A	A
ENERGY EFFICIENCY											
SEASONAL EFFICIENCY IN COOLING (Reg. EU 2016/2281)											
Ambient refrigeration											
Prated,c	(8)	kW	685	987	1257	-	925	1135	1237	993	1464
SEER	(8)(9)		8,86	8,80	8,63	-	8,92	8,83	8,86	8,92	8,59
Performance ηs	(8)(10)	%	346	344	337	-	349	345	346	349	335
EXCHANGERS											
HEAT EXCHANGER USER SIDE IN REFRIGERATION											
Water flow	(1)	l/s	47,20	64,12	81,39	98,67	54,56	72,00	78,54	71,00	95,06
Pressure drop	(1)	kPa	54,6	43,2	75,5	92,1	52,1	63,2	62,4	67,9	77,3
HEAT EXCHANGER SOURCE SIDE IN REFRIGERATION											
Water flow	(1)	l/s	55,69	76,13	96,10	116,35	63,90	84,44	91,96	82,48	110,61
Pressure drop	(1)	kPa	44,6	42,1	51,5	59,6	41,8	50,8	49,3	56,4	61,8
REFRIGERANT CIRCUIT											
Compressors nr.		N°	2	3	4	5	2	3	3	2	3
No. Circuits		N°	1	1	1	1	1	1	1	1	1
Refrigerant charge		kg	330	610	900	1090	350	650	670	370	685
NOISE LEVEL											
Sound Pressure	(3)	dB(A)	77	78	78	78	78	78	78	79	79
Sound power level in cooling	(4)(5)	dB(A)	96	97	98	99	97	98	98	98	99
SIZE AND WEIGHT											
A	(6)(7)	mm	3050	3710	4720	5700	3050	4690	4690	3050	4690
B	(6)(7)	mm	1620	1710	1890	2350	1620	1660	1660	1620	1660
H	(6)(7)	mm	2190	2260	2400	2400	2190	2260	2260	2190	2260
Operating weight	(6)(7)	kg	5340	7750	10610	13850	5330	8470	8700	5310	8810

Notes:
1 Plant (side) cooling exchanger water (in/out) 12°C/7°C; Source (side) heat exchanger water (in/out) 30°C/35°C.
2 Values in compliance with EN14511-3:2013.
3 Average sound pressure level at 1m distance, unit in a free field on a reflective surface; non-binding value calculated from the sound power level.
4 Sound power on the basis of measurements made in compliance with ISO 9614.
5 Sound power level in cooling, indoors.
6 Unit in standard configuration/execution, without optional accessories.
7 Lay-out with diagonal exchangers in units with 1, 2, 3 and 4 compressors; lay-out with horizontal exchangers in units with 5 and 6 compressors.
8 Seasonal energy efficiency of the cooling environment [REGULATION (EU) N. 2016/2281]
9 Seasonal space heating energy index
10 Seasonal energy efficiency of the space cooling
The units highlighted in this publication contain HFC R134a [GWP_{100} 1430] fluorinated greenhouse gases.

TX-W			2D1C	2D2B	2D2C	2D3C	2D4C	3A00	3B00	3B1A	3B2A
Power supply		V/ph/Hz	400/3/50	400/3/50	400/3/50	400/3/50	400/3/50	400/3/50	400/3/50	400/3/50	400/3/50
PERFORMANCE											
COOLING ONLY (GROSS VALUE)											
Cooling capacity range	(1)	kW	1656÷2070	1984÷2479	2117÷2646	2599÷3249	3081÷3852	733÷1062	1036÷1480	1288÷1839	1540÷2200
EER (up to)	(1)	kW/kW	6,37	6,33	6,39	6,49	6,58	6,06	6,13	6,32	6,36
ESEER (up to)	(1)	kW/kW	10,00	9,91	10,10	10,30	10,40	9,67	9,63	9,78	9,91
COOLING ONLY (EN14511 VALUE)											
Cooling capacity	(1)(2)	kW	2060	2203	2633	3231	3833	732	1091	1359	2188
EER	(1)(2)	kW/kW	5,71	5,95	5,66	5,67	5,74	5,91	5,92	6,06	5,22
ESEER	(1)(2)	kW/kW	-	-	-	-	-	8,77	8,70	8,53	-
Cooling energy class			-	-	-	-	-	A	A	A	-
ENERGY EFFICIENCY											
SEASONAL EFFICIENCY IN COOLING (Reg. EU 2016/2281)											
Ambient refrigeration											
Prated,c	(8)	kW	-	-	-	-	-	732	1091	1359	-
SEER	(8)(9)		-	-	-	-	-	8,93	8,82	8,64	-
Performance ηs	(8)(10)	%	-	-	-	-	-	349	345	338	-
EXCHANGERS											
HEAT EXCHANGER USER SIDE IN REFRIGERATION											
Water flow	(1)	l/s	98,99	118,57	126,54	155,39	184,20	50,81	70,76	87,96	105,23
Pressure drop	(1)	kPa	76,2	83,8	83,0	97,0	87,9	45,2	43,5	74,2	90,4
HEAT EXCHANGER SOURCE SIDE IN REFRIGERATION											
Water flow	(1)	l/s	115,07	138,28	147,30	180,64	213,84	60,62	83,88	103,71	123,88
Pressure drop	(1)	kPa	60,1	57,0	53,4	63,4	71,1	43,3	42,9	50,2	59,7
REFRIGERANT CIRCUIT											
Compressors nr.		N°	3	4	4	5	6	3	3	4	5
No. Circuits		N°	1	1	1	1	1	1	1	1	1
Refrigerant charge		kg	685	975	995	1220	1520	565	625	910	1105
NOISE LEVEL											
Sound Pressure	(3)	dB(A)	79	79	80	79	80	77	78	78	78
Sound power level in cooling	(4)(5)	dB(A)	99	99	100	100	101	96	97	98	99
SIZE AND WEIGHT											
A	(6)(7)	mm	4690	4720	4720	5700	6610	3710	3710	4720	5700
B	(6)(7)	mm	1660	1890	1890	2350	2400	1710	1710	1890	2350
H	(6)(7)	mm	2260	2400	2400	2400	2450	2260	2260	2400	2400
Operating weight	(6)(7)	kg	8880	11250	11450	15420	20750	7440	7370	10740	14050

Notes:
1 Plant (side) cooling exchanger water (in/out) 12°C/7°C; Source (side) heat exchanger water (in/out) 30°C/35°C.
2 Values in compliance with EN14511-3:2013.
3 Average sound pressure level at 1m distance, unit in a free field on a reflective surface; non-binding value calculated from the sound power level.
4 Sound power on the basis of measurements made in compliance with ISO 9614.
5 Sound power level in cooling, indoors.
6 Unit in standard configuration/execution, without optional accessories.
7 Lay-out with diagonal exchangers in units with 1, 2, 3 and 4 compressors; lay-out with horizontal exchangers in units with 5 and 6 compressors.
8 Seasonal energy efficiency of the cooling environment [REGULATION (EU) N. 2016/2281]
9 Seasonal space heating energy index
10 Seasonal energy efficiency of the space cooling
The units highlighted in this publication contain HFC R134a [GWP_{100} 1430] fluorinated greenhouse gases.

TX-W			3B3A	3C00	3C1A	3C1B	3C2B	3D00	3D1A	3D1C	3D2C
Power supply		V/ph/Hz	400/3/50	400/3/50	400/3/50	400/3/50	400/3/50	400/3/50	400/3/50	400/3/50	400/3/50
PERFORMANCE											
COOLING ONLY (GROSS VALUE)											
Cooling capacity range	(1)	kW	1793÷2562	1205÷1721	1453÷2076	1550÷2214	1907÷2724	1792÷2240	2076÷2594	2254÷2817	2738÷3423
EER (up to)	(1)	kW/kW	6,42	6,49	6,45	6,47	6,54	6,33	6,32	6,37	6,49
ESEER (up to)	(1)	kW/kW	10,10	10,20	9,99	9,98	10,10	10,20	9,96	10,10	10,30
COOLING ONLY (EN14511 VALUE)											
Cooling capacity	(1)(2)	kW	2549	1310	2067	2204	2711	2229	2580	2803	3404
EER	(1)(2)	kW/kW	5,28	6,23	5,42	5,48	5,49	5,80	5,67	5,74	5,73
ESEER	(1)(2)	kW/kW	-	8,90	-	-	-	-	-	-	-
Cooling energy class			-	A	-	-	-	-	-	-	-
ENERGY EFFICIENCY											
SEASONAL EFFICIENCY IN COOLING (Reg. EU 2016/2281)											
Ambient refrigeration											
Prated,c	(8)	kW	-	1310	-	-	-	-	-	-	-
SEER	(8)(9)		-	8,98	-	-	-	-	-	-	-
Performance ηs	(8)(10)	%	-	351	-	-	-	-	-	-	-
EXCHANGERS											
HEAT EXCHANGER USER SIDE IN REFRIGERATION											
Water flow	(1)	l/s	122,50	82,30	99,27	105,86	130,28	107,14	124,07	134,72	163,68
Pressure drop	(1)	kPa	83,6	61,4	72,8	72,6	83,6	80,3	91,8	87,0	101
HEAT EXCHANGER SOURCE SIDE IN REFRIGERATION											
Water flow	(1)	l/s	143,97	96,22	116,35	123,90	152,27	124,21	144,30	156,47	189,93
Pressure drop	(1)	kPa	67,2	50,4	49,1	47,7	60,1	66,0	59,4	57,1	70,1
REFRIGERANT CIRCUIT											
Compressors nr.		N°	6	3	4	4	5	3	4	4	5
No. Circuits		N°	1	1	1	1	1	1	1	1	1
Refrigerant charge		kg	1390	670	940	965	1180	705	975	1015	1230
NOISE LEVEL											
Sound Pressure	(3)	dB(A)	79	78	79	79	79	79	80	80	80
Sound power level in cooling	(4)(5)	dB(A)	100	98	99	99	100	99	100	100	101
SIZE AND WEIGHT											
A	(6)(7)	mm	6610	4690	4720	4720	5700	4690	4720	4720	5700
B	(6)(7)	mm	2400	1660	1890	1890	2350	1660	1890	1890	2350
H	(6)(7)	mm	2450	2260	2400	2400	2400	2260	2400	2400	2400
Operating weight	(6)(7)	kg	18670	8700	11010	11210	14910	9010	11250	11580	15500

Notes:
1 Plant (side) cooling exchanger water (in/out) 12°C/7°C; Source (side) heat exchanger water (in/out) 30°C/35°C.
2 Values in compliance with EN14511-3:2013.
3 Average sound pressure level at 1m distance, unit in a free field on a reflective surface; non-binding value calculated from the sound power level.
4 Sound power on the basis of measurements made in compliance with ISO 9614.
5 Sound power level in cooling, indoors.
6 Unit in standard configuration/execution, without optional accessories.
7 Lay-out with diagonal exchangers in units with 1, 2, 3 and 4 compressors; lay-out with horizontal exchangers in units with 5 and 6 compressors.
8 Seasonal energy efficiency of the cooling environment [REGULATION (EU) N. 2016/2281]
9 Seasonal space heating energy index
10 Seasonal energy efficiency of the space cooling
The units highlighted in this publication contain HFC R134a [GWP_{100} 1430] fluorinated greenhouse gases.

TX-W			3D3C	4B00	4B1A	4B2A	4C00	4C1B	4D00	4D1C	4D2C
Power supply		V/ph/Hz	400/3/50	400/3/50	400/3/50	400/3/50	400/3/50	400/3/50	400/3/50	400/3/50	400/3/50
PERFORMANCE											
COOLING ONLY (GROSS VALUE)											
Cooling capacity range	(1)	kW	3221÷4026	1384÷1978	1636÷2337	1890÷2700	1605÷2294	1964÷2806	2388÷2985	2877÷3596	3360÷4200
EER (up to)	(1)	kW/kW	6,59	6,35	6,39	6,45	6,50	6,56	6,32	6,48	6,60
ESEER (up to)	(1)	kW/kW	10,40	9,85	9,92	10,10	10,10	10,10	10,10	10,30	10,40
COOLING ONLY (EN14511 VALUE)											
Cooling capacity	(1)(2)	kW	4006	1462	2325	2687	2284	2792	2969	3575	4178
EER	(1)(2)	kW/kW	5,81	6,09	5,28	5,34	5,52	5,52	5,78	5,81	5,86
ESEER	(1)(2)	kW/kW	-	8,60	-	-	-	-	-	-	-
Cooling energy class			-	A	-	-	-	-	-	-	-
ENERGY EFFICIENCY											
SEASONAL EFFICIENCY IN COOLING (Reg. EU 2016/2281)											
Ambient refrigeration											
Prated,c	(8)	kW	-	1462	-	-	-	-	-	-	-
SEER	(8)(9)		-	8,68	-	-	-	-	-	-	-
Performance ηs	(8)(10)	%	-	339	-	-	-	-	-	-	-
EXCHANGERS											
HEAT EXCHANGER USER SIDE IN REFRIGERATION											
Water flow	(1)	l/s	192,54	94,58	111,77	129,13	109,68	134,20	142,74	171,96	200,86
Pressure drop	(1)	kPa	91,3	73,0	87,4	84,3	71,7	86,4	95,1	107	94,1
HEAT EXCHANGER SOURCE SIDE IN REFRIGERATION											
Water flow	(1)	l/s	223,13	111,34	131,38	151,51	128,23	156,71	165,52	199,16	232,41
Pressure drop	(1)	kPa	71,0	49,8	58,2	68,4	49,0	60,5	63,9	66,8	77,0
REFRIGERANT CIRCUIT											
Compressors nr.		N°	6	4	5	6	4	5	4	5	6
No. Circuits		N°	1	1	1	1	1	1	1	1	1
Refrigerant charge		kg	1540	940	1125	1405	975	1185	1015	1235	1550
NOISE LEVEL											
Sound Pressure	(3)	dB(A)	80	78	78	79	79	79	80	80	80
Sound power level in cooling	(4)(5)	dB(A)	101	98	99	100	99	100	100	101	101
SIZE AND WEIGHT											
A	(6)(7)	mm	6610	4720	5700	6610	4720	5700	4720	5700	6610
B	(6)(7)	mm	2400	1890	2350	2400	1890	2350	1890	2350	2400
H	(6)(7)	mm	2450	2400	2400	2450	2400	2400	2400	2400	2450
Operating weight	(6)(7)	kg	21010	10920	14300	18880	11250	15000	11580	15730	21180

Notes:
1 Plant (side) cooling exchanger water (in/out) 12°C/7°C; Source (side) heat exchanger water (in/out) 30°C/35°C.
2 Values in compliance with EN14511-3:2013.
3 Average sound pressure level at 1m distance, unit in a free field on a reflective surface; non-binding value calculated from the sound power level.
4 Sound power on the basis of measurements made in compliance with ISO 9614.
5 Sound power level in cooling, indoors.
6 Unit in standard configuration/execution, without optional accessories.
7 Lay-out with diagonal exchangers in units with 1, 2, 3 and 4 compressors; lay-out with horizontal exchangers in units with 5 and 6 compressors.
8 Seasonal energy efficiency of the cooling environment [REGULATION (EU) N. 2016/2281]
9 Seasonal space heating energy index
10 Seasonal energy efficiency of the space cooling
The units highlighted in this publication contain HFC R134a [GWP_{100} 1430] fluorinated greenhouse gases.

TX-W			5B00	5B1A	5C00	5C1B	5D00	5D1C	6B00	6C00	6D00
Power supply		V/ph/Hz	400/3/50	400/3/50	400/3/50	400/3/50	400/3/50	400/3/50	400/3/50	400/3/50	400/3/50
PERFORMANCE											
COOLING ONLY (GROSS VALUE)											
Cooling capacity range	(1)	kW	1732÷2474	1986÷2837	2021÷2888	2381÷3401	3016÷3770	3500÷4374	2082÷2974	2440÷3486	3639÷4549
EER (up to)	(1)	kW/kW	6,42	6,47	6,60	6,64	6,46	6,59	6,49	6,66	6,57
ESEER (up to)	(1)	kW/kW	9,94	10,00	10,30	10,30	10,30	10,40	10,00	10,40	10,50
COOLING ONLY (EN14511 VALUE)											
Cooling capacity	(1)(2)	kW	2461	2823	2873	3385	3747	4351	2960	3470	4525
EER	(1)(2)	kW/kW	5,33	5,38	5,57	5,61	5,86	5,92	5,42	5,64	5,97
ESEER	(1)(2)	kW/kW	-	-	-	-	-	-	-	-	-
Cooling energy class			-	-	-	-	-	-	-	-	-
ENERGY EFFICIENCY											
SEASONAL EFFICIENCY IN COOLING (Reg. EU 2016/2281)											
Ambient refrigeration											
Prated,c	(8)	kW	-	-	-	-	-	-	-	-	-
SEER	(8)(9)		-	-	-	-	-	-	-	-	-
Performance ηs	(8)(10)	%	-	-	-	-	-	-	-	-	-
EXCHANGERS											
HEAT EXCHANGER USER SIDE IN REFRIGERATION											
Water flow	(1)	l/s	118,31	135,67	138,09	162,63	180,26	209,19	142,22	166,69	217,53
Pressure drop	(1)	kPa	87,1	83,5	86,5	82,3	109	96,4	83,9	82,8	98,1
HEAT EXCHANGER SOURCE SIDE IN REFRIGERATION											
Water flow	(1)	l/s	138,89	158,99	161,10	189,49	208,44	241,69	166,49	194,09	250,97
Pressure drop	(1)	kPa	57,5	68,8	57,2	65,2	73,2	75,7	68,3	63,5	81,6
REFRIGERANT CIRCUIT											
Compressors nr.		N°	5	6	5	6	5	6	6	6	6
No. Circuits		N°	1	1	1	1	1	1	1	1	1
Refrigerant charge		kg	1145	1425	1195	1490	1250	1560	1440	1500	1575
NOISE LEVEL											
Sound Pressure	(3)	dB(A)	78	79	79	80	80	81	79	80	81
Sound power level in cooling	(4)(5)	dB(A)	99	100	100	101	101	102	100	101	102
SIZE AND WEIGHT											
A	(6)(7)	mm	5700	6610	5700	6610	5700	6610	6610	6610	6610
B	(6)(7)	mm	2350	2400	2350	2400	2350	2400	2400	2400	2400
H	(6)(7)	mm	2400	2450	2400	2450	2400	2450	2450	2450	2450
Operating weight	(6)(7)	kg	14550	19150	15180	20240	15890	21350	19400	20410	21560

Notes:
1 Plant (side) cooling exchanger water (in/out) 12°C/7°C; Source (side) heat exchanger water (in/out) 30°C/35°C.
2 Values in compliance with EN14511-3:2013.
3 Average sound pressure level at 1m distance, unit in a free field on a reflective surface; non-binding value calculated from the sound power level.
4 Sound power on the basis of measurements made in compliance with ISO 9614.
5 Sound power level in cooling, indoors.
6 Unit in standard configuration/execution, without optional accessories.
7 Lay-out with diagonal exchangers in units with 1, 2, 3 and 4 compressors; lay-out with horizontal exchangers in units with 5 and 6 compressors.
8 Seasonal energy efficiency of the cooling environment [REGULATION (EU) N. 2016/2281]
9 Seasonal space heating energy index
10 Seasonal energy efficiency of the space cooling
The units highlighted in this publication contain HFC R134a [GWP_{100} 1430] fluorinated greenhouse gases.
Certified data in EUROVENT

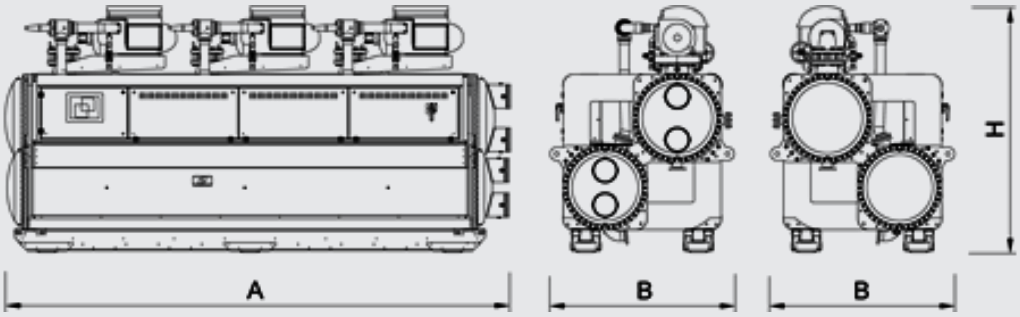

CHILLERS

HE 0011 - 0121

Condenserless unit 4,70-32,4 kW



Version

FF	Basic version, with built-in hydronic kit

Features

Structure and base in hot-dip galvanised steel with epoxy powder paint finish.
High efficiency, low pressure drop AISI 316 stainless steel plate heat exchangers, fitted with heating element to provide frost protection.
Control with foolproof device accessible from the outside.
Differential pressure switch.
The remote condenser may be installed up to a distance of 50 metres from the cooling unit.
The safety of the unit is guaranteed by a door lock isolator on the electrical power switchboard and by active protection devices on the main components.

Accessory

- Buffer tank plus pump
- Hydronic kit plus pump
- Removable metal mesh water filter kit
- Modulating pump kit
- Control board for the modulating pump kit

HH FF is the Climaveneta range of cooling units. These are indoor units that may be combined with remote outdoor condensers to guarantee maximum flexibility and compliance with any architectural restriction. These units have hermetic Scroll compressors and Full Floating technology. The latter is an intelligent electronic unit providing the perfect answer to residential market requirements: compactness, ease of installation and quietness.

Controls

Full Floating features
Once every 3 minutes an algorithm automatically optimises the water set point in relation to the compressor operating time and the temperatures of the water in the system. The water storage tank is no longer indispensable because it is compensated by the Floating
Set function, with resulting reduction in:
size;
weight;
installation times;
system setting-up times.

HE / FF			0011	0021	0025	0031	0021	0025	0031
Power supply		V/ph/Hz	230/1/50	230/1/50	230/1/50	230/1/50	400/3/50	400/3/50	400/3/50
PERFORMANCE									
COOLING									
Cooling capacity	(1)	kW	4,70	6,10	7,00	8,20	6,10	7,00	8,20
Total power input	(1)	kW	1,60	2,10	2,50	2,90	2,10	2,40	2,90
EER	(1)	kW/kW	2,84	2,89	2,80	2,79	2,94	2,86	2,86
EXCHANGERS									
HEAT EXCHANGER USER SIDE IN REFRIGERATION									
Water flow	(1)	l/s	0,25	0,31	0,36	0,42	0,31	0,36	0,42
Available unit's head	(1)	kPa	22,0	24,0	26,0	27,0	24,0	26,0	27,0
REFRIGERANT CIRCUIT									
Compressors nr.		N°	1	1	1	1	1	1	1
No. Circuits		N°	1	1	1	1	1	1	1
Refrigerant charge		kg							
NOISE LEVEL									
Sound Pressure	(2)	dB(A)	43	43	48	48	43	48	48
Sound power level in cooling	(3)(4)	dB(A)	Non un numero	Non un numero	Non un numero	Non un numero	Non un numero	Non un numero	Non un numero
SIZE AND WEIGHT									
A	(5)	mm	450	450	450	450	450	450	450
B	(5)	mm	400	400	400	400	400	400	400
H	(5)	mm	960	960	960	960	960	960	960
Operating weight	(5)	kg	68	70	71	74	70	71	74

HE / FF			0041	0051	0061	0071	0091	0101	0121
Power supply		V/ph/Hz	400/3/50	400/3/50	400/3/50	400/3/50	400/3/50	400/3/50	400/3/50
PERFORMANCE									
COOLING									
Cooling capacity	(1)	kW	10,5	12,5	15,0	19,1	22,2	26,8	32,4
Total power input	(1)	kW	3,40	4,20	4,90	6,30	7,80	8,90	10,9
EER	(1)	kW/kW	3,06	2,97	3,07	3,03	2,86	3,00	2,96
EXCHANGERS									
HEAT EXCHANGER USER SIDE IN REFRIGERATION									
Water flow	(1)	l/s	0,53	0,64	0,78	0,94	1,14	1,33	1,64
Available unit's head	(1)	kPa	19,0	20,0	20,0	23,0	22,0	23,0	23,0
REFRIGERANT CIRCUIT									
Compressors nr.		N°	1	1	1	1	1	1	1
No. Circuits		N°	1	1	1	1	1	1	1
Refrigerant charge		kg							
NOISE LEVEL									
Sound Pressure	(2)	dB(A)	52	52	52	52	52	53	53
Sound power level in cooling	(3)(4)	dB(A)	Non un numero	Non un numero	Non un numero	Non un numero	Non un numero	Non un numero	Non un numero
SIZE AND WEIGHT									
A	(5)	mm	450	450	450	600	600	600	600
B	(5)	mm	400	400	400	600	600	600	600
H	(5)	mm	960	960	960	960	960	960	960
Operating weight	(5)	kg	85	87	90	177	180	187	190

Notes:
1 Plant (side) cooling exchanger water (in/out) 12°C/7°C; Condensation temperature 47°C.
2 Average sound pressure level at 1m distance, unit in a free field on a reflective surface; non-binding value calculated from the sound power level.
3 Sound power on the basis of measurements made in compliance with ISO 9614.
4 Sound power level in cooling, indoors.
5 Unit in standard configuration/execution, without optional accessories.
The units highlighted in this publication contain HFC R407C [GWP_{100} 1774] fluorinated greenhouse gases.

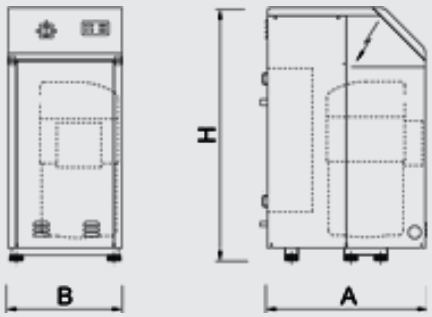

CHILLERS

NECS-ME 0152 - 1604

Condenserless unit 39,5-432 kW



Version

B Basic

Features

REFRIGERANT GAS R410A

The use of R410A allowed to achive better energy efficiencies with environment full respect (ODP = 0)

UNIT DESIGNED FOR COMBINATION WITH REMOTE CONDENSER

Compact units, designed for residential- and commercial air-conditioning systems

INTEGRAL CONTROL AND ADJUSTMENT

The condenserless unit comes complete with built-in microprocessor control with possible connection to the condenser.

INTEGRATED HYDRONIC GROUP

The built-in hydronic module already contains the main water circuit components; it is available with single or double pump configuration, with low or high head.

Accessory

- Remote control keyboard (distance to 200m and to 500m)
- Set-up for remote connectivity with ModBus, Echelon LonTalk, Bacnet protocol board
- Acoustical enclosure to reduce the noise emissions.
- Rubber anti-vibration mounting kit

Indoor unit for the production of chilled water that may be connected to a remote condenser with hermetic rotary scroll compressors working with R410A, braze-welded plate-type exchanger and thermal expansion valve. Panels and base in hot-dip galvanised sheet steel with paint finish.

Controls

W3000 Base – W3000SE Compact

The controller in two different versions according to the unit's type:

W3000 Base: electronic controller complete with keypad features an easy-to-use interface and a complete LCD display, allowing to consult and intervene on the unit by means of a menu up to three languages (Italian and English come standard, a further language can be chosen within French, Spanish, German, Russian and Swedish)

W3000SE Compact: electronic controller complete with keypad features an easy-to-use interface and a complete LCD display, allowing to consult and intervene on the unit by means of a multi-language menu, with selectable language setting on site. This controller also includes an internal clock.

All the W3000 electronic controllers offer advanced functions and algorithms.

The keypad features an easy-to-use interface and a complete LCD display, allowing to consult and intervene on the unit by means of a multi-level menu, with selectable language setting.

The regulation is based on the exclusive QuickMind algorithm, including self-adaptive control logics, beneficial in low water content systems. As alternatives the proportional- or proportional- integral regulations are also available.

The diagnostics includes a complete alarm management, with the "black-box" and alarm logging functions for enhanced analysis of the unit operation (available on W3000SE Compact only).

For multiple units' systems, the regulation of the resources, via optional proprietary devices, can be implemented. Energy metering, for both consumption and capacity, can also be developed.

Supervision can be easily developed via proprietary devices or the integration in third party systems by means of the most common protocols as ModBus, Bacnet, Bacnet-over-IP, Echelon LonWorks.

Compatibility with the remote keyboard managing up to 10 units.

The internal real time clock allows to manage a weekly schedule operating on 4-day profiles with 10 hour belts (available on W3000SE Compact only, optional on W3000 Base controller).

The defrost adopts a proprietary self-adaptive logic, which features the monitoring of numerous operational parameters.

This allows to reduce the number and duration of the defrost cycles, with a benefit for the overall energy efficiency.



NECS-ME / B			0152	0182	0202	0252	0262	0302	0352
Power supply		V/ph/Hz	400/3/50	400/3/50	400/3/50	400/3/50	400/3/50	400/3/50	400/3/50
PERFORMANCE									
COOLING									
Cooling capacity	(1)	kW	39,5	45,8	53,6	60,5	67,4	80,2	92,8
Total power input	(1)	kW	12,0	13,5	15,7	18,1	20,0	23,4	26,9
EER	(1)	kW/kW	3,29	3,39	3,41	3,34	3,37	3,43	3,45
EXCHANGERS									
HEAT EXCHANGER USER SIDE IN REFRIGERATION									
Water flow	(1)	l/s	1,89	2,19	2,56	2,89	3,22	3,84	4,44
Pressure drop	(1)	kPa	48,0	41,3	41,0	39,1	48,4	29,4	27,6
REFRIGERANT CIRCUIT									
Compressors nr.		N°	2	2	2	2	2	2	2
No. Circuits		N°	1	1	1	1	1	1	1
Refrigerant charge		kg							
NOISE LEVEL									
Sound Pressure	(2)	dB(A)	42	43	43	43	44	44	45
Sound power level in cooling	(3)(4)	dB(A)	73	74	74	74	75	76	77
SIZE AND WEIGHT									
A	(5)	mm	1130	1130	1130	1130	1130	1310	1310
B	(5)	mm	669	669	669	669	669	893	893
H	(5)	mm	1255	1255	1255	1255	1255	1496	1496
Operating weight	(5)	kg	270	280	290	295	300	410	500

NECS-ME / B			0412	0452	0512	0552	0612	0604	0704
Power supply		V/ph/Hz	400/3/50	400/3/50	400/3/50	400/3/50	400/3/50	400/3/50	400/3/50
PERFORMANCE									
COOLING									
Cooling capacity	(1)	kW	105	117	131	151	170	161	186
Total power input	(1)	kW	30,3	33,9	37,6	43,3	48,9	46,9	53,7
EER	(1)	kW/kW	3,45	3,46	3,49	3,48	3,47	3,43	3,46
EXCHANGERS									
HEAT EXCHANGER USER SIDE IN REFRIGERATION									
Water flow	(1)	l/s	5,00	5,61	6,28	7,20	8,13	7,69	8,87
Pressure drop	(1)	kPa	35,0	33,1	32,2	28,9	36,8	32,5	31,0
REFRIGERANT CIRCUIT									
Compressors nr.		N°	2	2	2	2	2	4	4
No. Circuits		N°	1	1	1	1	1	2	2
Refrigerant charge		kg							
NOISE LEVEL									
Sound Pressure	(2)	dB(A)	45	46	46	47	47	54	55
Sound power level in cooling	(3)(4)	dB(A)	77	78	78	79	79	86	87
SIZE AND WEIGHT									
A	(5)	mm	1310	1310	1310	1310	1310	2227	2227
B	(5)	mm	893	893	893	893	893	1020	1020
H	(5)	mm	1496	1496	1496	1496	1496	1780	1780
Operating weight	(5)	kg	585	615	645	680	700	755	950

NECS-ME / B			0804	0904	1004	1104	1204	1404	1604
Power supply		V/ph/Hz	400/3/50	400/3/50	400/3/50	400/3/50	400/3/50	400/3/50	400/3/50
PERFORMANCE									
COOLING									
Cooling capacity	(1)	kW	207	235	263	301	339	387	432
Total power input	(1)	kW	60,6	67,9	75,2	86,5	97,8	111	124
EER	(1)	kW/kW	3,42	3,47	3,50	3,47	3,47	3,49	3,48
EXCHANGERS									
HEAT EXCHANGER USER SIDE IN REFRIGERATION									
Water flow	(1)	l/s	9,92	11,26	12,58	14,37	16,22	18,48	20,64
Pressure drop	(1)	kPa	38,8	38,9	39,4	36,7	46,7	49,6	54,7
REFRIGERANT CIRCUIT									
Compressors nr.		N°	4	4	4	4	4	4	4
No. Circuits		N°	2	2	2	2	2	2	2
Refrigerant charge		kg							
NOISE LEVEL									
Sound Pressure	(2)	dB(A)	56	57	58	59	59	59	59
Sound power level in cooling	(3)(4)	dB(A)	88	89	90	91	91	91	91
SIZE AND WEIGHT									
A	(5)	mm	2227	2227	2227	2227	2227	2227	2227
B	(5)	mm	1020	1020	1020	1020	1020	1020	1020
H	(5)	mm	1780	1780	1780	1780	1780	1780	1780
Operating weight	(5)	kg	1125	1185	1250	1330	1370	1430	1480

Notes:
1 Plant (side) cooling exchanger water (in/out) 12°C/7°C; Condensation temperature 47°C.
2 Average sound pressure level at 10m distance, unit in a free field on a reflective surface; non-binding value calculated from the sound power level.
3 Sound power on the basis of measurements made in compliance with ISO 9614.
4 Sound power level in cooling, indoors.
5 Unit in standard configuration/execution, without optional accessories.
The units highlighted in this publication contain HFC R410A [GWP_{100} 2088] fluorinated greenhouse gases.

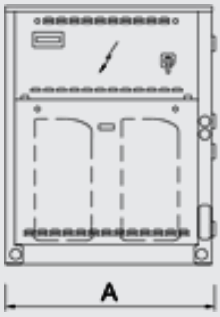
A


H
B

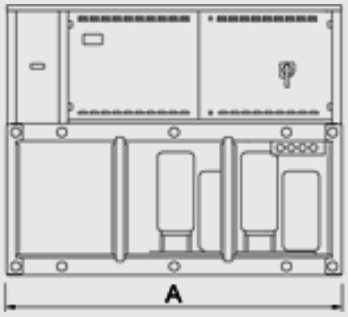
A

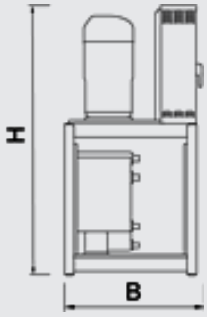
H
B

CHILLERS

FOCS-ME 0401 - 1902

Condenserless unit 79,2-410 kW



Version

B Basic

Features

COMPACTNESS
Compactness in terms of overall size and weight, helping installation and working on site
ADAPTABILITY
Adaptability at the building's cooling request thanks to the continuous capacity regulation, assured by sophisticated control's logic.
WIDE OPERATING RANGE
Extensive range of operation with remote condenser operating up to 46°C air temperature
SILENT OPERATION
Extremely silent operation thanks to the accurate unit's design. Optional integral acoustic enclosure, reduces more the sound level beyond the best on market

Accessory

- Soft start
- Set-up for remote connectivity with ModBus, Echelon, Bacnet, Bacnet over-IP.
- Remote control keyboard (distance to 200m and to 500m)
- Electronic expansion valve
- Integral acoustical enclosure (type base or plus)

Indoor unit for the production of chilled water combined with a remote condenser, with semi-hermetic screw compressors optimized for R134a, shell and tube evaporator designed by Climaveneta and thermostatic expansion valve.
Base and supporting structure and panels are of galvanized epoxy powder coated steel with increased thickness.
Flexible and reliable unit; it easily adapts itself to different thermal load conditions thanks to the precise thermoregulation. The high performance's level is achieved thanks to the accurate sizing of all internal components.

Controls

W3000SE Large
The W3000 SE Large controller offers advanced functions and algorithms.
The keypad is generously sized with full operating status display. The commands and detailed LCD display make access to the unit's settings easy and safe. These resources allow to consult and intervene on the unit by means of a multi-level menu, with selectable language setting.
The diagnostics includes a complete alarm management, with the "black-box" and alarm logging functions for enhanced analysis of the unit operation.
For multiple units' systems, the regulation of the resources, via optional proprietary devices, can be implemented. Energy metering, for both consumption and capacity, can also be developed. Supervision can be easily developed via proprietary devices or the integration in third party systems by means of the most common protocols as ModBus, Bacnet, Bacnet-over-IP, Echelon LonWorks.
Compatibility with the remote keyboard managing up to 10 units.
Availability of an internal real time clock for operation scheduling (4-day profiles with 10 hour belts).
The regulation features the continuous modulation of capacity, based on a dynamic dead band and referring to the leaving water temperature. As alternative, step-wise regulation is also available, referred to the return water temperature with selectable proportional- or proportional-integral logic.



FOCS-ME / B			0401	0501	0551	0651	0751	0802	0851
Power supply		V/ph/Hz	400/3/50	400/3/50	400/3/50	400/3/50	400/3/50	400/3/50	400/3/50
PERFORMANCE									
COOLING									
Cooling capacity	(1)	kW	79,2	98,2	119	135	151	162	181
Total power input	(1)	kW	22,7	27,9	32,5	37,6	42,3	45,6	48,9
EER	(1)	kW/kW	3,49	3,52	3,67	3,59	3,57	3,55	3,71
EXCHANGERS									
HEAT EXCHANGER USER SIDE IN REFRIGERATION									
Water flow	(1)	l/s	3,79	4,70	5,71	6,46	7,23	7,73	8,67
Pressure drop	(1)	kPa	14,7	14,9	11,9	15,2	19,0	14,6	18,3
REFRIGERANT CIRCUIT									
Compressors nr.		N°	1	1	1	1	1	2	1
No. Circuits		N°	1	1	1	1	1	2	1
Refrigerant charge		kg							
NOISE LEVEL									
Sound Pressure	(2)	dB(A)	59	60	62	62	62	62	62
Sound power level in cooling	(3)(4)	dB(A)	91	92	94	94	94	94	94
SIZE AND WEIGHT									
A	(5)	mm	2024	2330	2400	2400	2400	2890	2947
B	(5)	mm	880	880	880	880	880	1081	880
H	(5)	mm	1300	1300	1490	1490	1490	1430	1490
Operating weight	(5)	kg	720	750	1040	1060	1060	1280	1130

FOCS-ME / B			0951	1002	1102	1302	1502	1702	1902
Power supply		V/ph/Hz	400/3/50	400/3/50	400/3/50	400/3/50	400/3/50	400/3/50	400/3/50
PERFORMANCE									
COOLING									
Cooling capacity	(1)	kW	203	200	230	273	312	360	410
Total power input	(1)	kW	56,5	56,0	64,6	75,3	85,0	97,7	113
EER	(1)	kW/kW	3,59	3,57	3,56	3,63	3,67	3,69	3,63
EXCHANGERS									
HEAT EXCHANGER USER SIDE IN REFRIGERATION									
Water flow	(1)	l/s	9,71	9,55	10,99	13,06	14,93	17,23	19,63
Pressure drop	(1)	kPa	34,8	33,7	44,6	38,7	35,0	46,5	25,0
REFRIGERANT CIRCUIT									
Compressors nr.		N°	1	2	2	2	2	2	2
No. Circuits		N°	1	2	2	2	2	2	2
Refrigerant charge		kg							
NOISE LEVEL									
Sound Pressure	(2)	dB(A)	62	63	65	65	65	65	65
Sound power level in cooling	(3)(4)	dB(A)	94	95	97	97	97	97	97
SIZE AND WEIGHT									
A	(5)	mm	2947	2890	3016	3277	3277	3292	3362
B	(5)	mm	880	1081	1081	1081	1081	1081	1081
H	(5)	mm	1500	1430	1480	1580	1580	1590	1700
Operating weight	(5)	kg	1150	1290	1680	1970	1990	2010	2300

Notes:
1 Plant (side) cooling exchanger water (in/out) 12°C/7°C; Condensation temperature 47°C.
2 Average sound pressure level at 10m distance, unit in a free field on a reflective surface; non-binding value calculated from the sound power level.
3 Sound power on the basis of measurements made in compliance with ISO 9614.
4 Sound power level in cooling, indoors.
5 Unit in standard configuration/execution, without optional accessories.
The units highlighted in this publication contain HFC R134a [GWP_{100} 1430] fluorinated greenhouse gases.

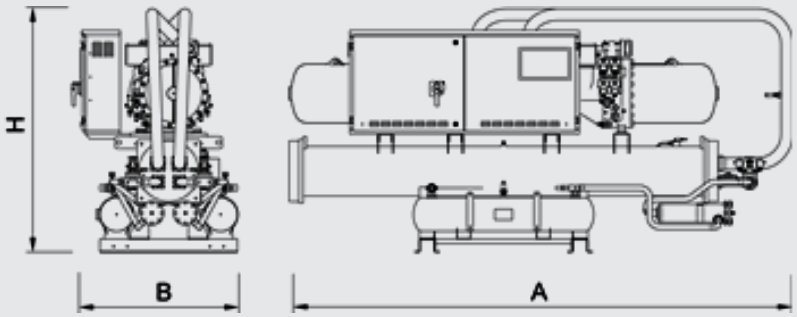

CHILLERS

FOCS-ME 1001 - 9604

Condenserless unit
219-2240 kW



Version

B Basic

Features

COMPACTNESS
Compactness in terms of overall size and weight, helping installation and working on site
ADAPTABILITY
Adaptability at the building's cooling request thanks to the continuous capacity regulation, assured by sophisticated control's logic.
WIDE OPERATING RANGE
Extensive range of operation with remote condenser operating up to 46°C air temperature
SILENT OPERATION
Extremely silent operation thanks to the accurate unit's design. Optional integral acoustic enclosure, reduces more the sound level beyond the best on market

Accessory

- Integral acoustical enclosure (type base or plus)
- Electronic expansion valve
- Soft start
- Set-up for remote connectivity with ModBus, Echelon, Bacnet, Bacnet over-IP.
- Remote control keyboard (distance to 200m and to 500m)

Indoor unit for the production of chilled water combined with a remote condenser, with semi-hermetic screw compressors optimized for R134a, shell and tube evaporator designed by Climaveneta and thermostatic expansion valve.
Base and supporting structure and panels are of galvanized epoxy powder coated steel with increased thickness.
Flexible and reliable unit; it easily adapts itself to different thermal load conditions thanks to the precise thermoregulation. The high performance's level is achieved thanks to the accurate sizing of all internal components.

Controls

W3000SE Large
The W3000 SE Large controller offers advanced functions and algorithms.
The keypad is generously sized with full operating status display. The commands and detailed LCD display make access to the unit's settings easy and safe. These resources allow to consult and intervene on the unit by means of a multi-level menu, with selectable language setting.
The diagnostics includes a complete alarm management, with the "black-box" and alarm logging functions for enhanced analysis of the unit operation.
For multiple units' systems, the regulation of the resources, via optional proprietary devices, can be implemented. Energy metering, for both consumption and capacity, can also be developed. Supervision can be easily developed via proprietary devices or the integration in third party systems by means of the most common protocols as ModBus, Bacnet, Bacnet-over-IP, Echelon LonWorks.
Compatibility with the remote keyboard managing up to 10 units.
Availability of an internal real time clock for operation scheduling (4-day profiles with 10 hour belts).
The regulation features the continuous modulation of capacity, based on a dynamic dead band and referring to the leaving water temperature. As alternative, step-wise regulation is also available, referred to the return water temperature with selectable proportional- or proportional-integral logic.



FOCS-ME / B			1001	1201	1301	1351	1601	1801	2002	2402	2602
Power supply		V/ph/Hz	400/3/50	400/3/50	400/3/50	400/3/50	400/3/50	400/3/50	400/3/50	400/3/50	400/3/50
PERFORMANCE											
COOLING											
Cooling capacity	(1)	kW	219	262	295	333	389	445	419	516	591
Total power input	(1)	kW	59,7	69,7	77,5	85,4	101	118	114	139	155
EER	(1)	kW/kW	3,67	3,75	3,81	3,90	3,83	3,77	3,68	3,71	3,81
EXCHANGERS											
HEAT EXCHANGER USER SIDE IN REFRIGERATION											
Water flow	(1)	l/s	10,47	12,52	14,13	15,93	18,60	21,27	20,01	24,70	28,28
Pressure drop	(1)	kPa	37,3	35,5	31,3	39,8	22,4	29,3	23,9	36,4	25,9
REFRIGERANT CIRCUIT											
Compressors nr.		N°	1	1	1	1	1	1	2	2	2
No. Circuits		N°	1	1	1	1	1	1	2	2	2
Refrigerant charge		kg									
NOISE LEVEL											
Sound Pressure	(2)	dB(A)	62	65	65	65	65	65	65	65	67
Sound power level in cooling	(3)(4)	dB(A)	94	97	97	97	97	97	97	97	99
SIZE AND WEIGHT											
A	(5)	mm	2835	3120	3120	3120	3530	3530	3730	3730	4500
B	(5)	mm	900	900	900	900	900	900	1150	1150	1150
H	(5)	mm	1800	1800	1800	1800	1950	1950	2000	2000	2000
Operating weight	(5)	kg	1380	1870	1910	1920	2640	2650	2750	3420	3710

FOCS-ME / B			2702	3202	3602	4202	4502	4802	5003	5203	5403
Power supply		V/ph/Hz	400/3/50	400/3/50	400/3/50	400/3/50	400/3/50	400/3/50	400/3/50	400/3/50	400/3/50
PERFORMANCE											
COOLING											
Cooling capacity	(1)	kW	674	759	885	1000	1061	1120	1184	1251	1304
Total power input	(1)	kW	171	202	236	265	277	290	320	337	353
EER	(1)	kW/kW	3,94	3,75	3,75	3,78	3,82	3,86	3,70	3,72	3,69
EXCHANGERS											
HEAT EXCHANGER USER SIDE IN REFRIGERATION											
Water flow	(1)	l/s	32,23	36,28	42,31	47,84	50,72	53,56	56,60	59,82	62,36
Pressure drop	(1)	kPa	36,3	46,1	45,9	40,0	45,0	50,2	56,0	44,1	47,9
REFRIGERANT CIRCUIT											
Compressors nr.		N°	2	2	2	2	2	2	3	3	3
No. Circuits		N°	2	2	2	2	2	2	3	3	3
Refrigerant charge		kg									
NOISE LEVEL											
Sound Pressure	(2)	dB(A)	67	67	67	67	67	67	69	69	69
Sound power level in cooling	(3)(4)	dB(A)	99	99	99	99	99	99	101	101	101
SIZE AND WEIGHT											
A	(5)	mm	4500	4500	4500	4500	4500	4500	4425	4425	4425
B	(5)	mm	1150	1150	1150	1150	1150	1150	1700	1700	1700
H	(5)	mm	2000	2000	2000	2000	2000	2000	1900	1900	1900
Operating weight	(5)	kg	3730	4600	5050	5220	5250	5280	6810	6840	6850

FOCS-ME / B			5414	5904	6404	6804	7204	7804	8404	9004	9604
Power supply		V/ph/Hz	400/3/50	400/3/50	400/3/50	400/3/50	400/3/50	400/3/50	400/3/50	400/3/50	400/3/50
PERFORMANCE											
COOLING											
Cooling capacity	(1)	kW	1348	1433	1548	1660	1769	1886	2001	2121	2240
Total power input	(1)	kW	342	373	406	439	472	501	530	555	580
EER	(1)	kW/kW	3,94	3,84	3,82	3,78	3,75	3,77	3,78	3,82	3,86
EXCHANGERS											
HEAT EXCHANGER USER SIDE IN REFRIGERATION											
Water flow	(1)	l/s	64,46	68,55	74,04	79,37	84,61	90,17	95,68	101,44	107,12
Pressure drop	(1)	kPa	36,3	41,1	35,2	40,4	45,9	52,7	40,1	45,1	50,3
REFRIGERANT CIRCUIT											
Compressors nr.		N°	4	4	4	4	4	4	4	4	4
No. Circuits		N°	4	4	4	4	4	4	4	4	4
Refrigerant charge		kg									
NOISE LEVEL											
Sound Pressure	(2)	dB(A)	70	70	70	70	70	70	70	70	70
Sound power level in cooling	(3)(4)	dB(A)	102	102	102	102	102	102	102	102	102
SIZE AND WEIGHT											
A	(5)	mm	4500	4500	4500	4500	4500	4500	4500	4500	4500
B	(5)	mm	2250	2250	2250	2250	2250	2250	2250	2250	2250
H	(5)	mm	2000	2000	2000	2000	2000	2000	2000	2000	2000
Operating weight	(5)	kg	7560	8400	9980	10010	10020	10190	10350	10420	10480

Notes:
1 Plant (side) cooling exchanger water (in/out) 12°C/7°C; Condensation temperature 47°C.
2 Average sound pressure level at 10m distance, unit in a free field on a reflective surface; non-binding value calculated from the sound power level.
3 Sound power on the basis of measurements made in compliance with ISO 9614.
4 Sound power level in cooling, indoors.
5 Unit in standard configuration/execution, without optional accessories.
The units highlighted in this publication contain HFC R134a [GWP_{100} 1430] fluorinated greenhouse gases.

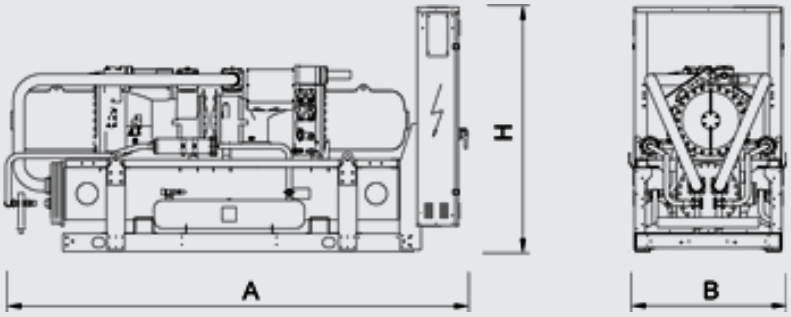
H
A
B

CHILLERS

TECS-FC 0211 - 1204

High efficiency air cooled chiller with free-cooling
302-1693 kW



Outdoor unit for the production of chilled water, equipped with oil-free centrifugal compressors, R134a refrigerant, axial EC fans, condensing coil with copper tubes and aluminum fins, shell and tube flooded evaporator and electronic expansion valve. Base, supporting structure and panels are of galvanized epoxy powder coated steel. The unit is supplied with refrigerant and has been factory tested. On-site installation therefore just involves making connections to the mains power and water supplies.
The rotor speed digital control allows an accurate and efficient thermoregulation in every operating condition. The economizer improves the refrigerant circuit efficiency (not present in sizes 0211 and 0452).
These chillers, fitted with free-cooling coils, are used in IT-cooling, industrial and civil applications, when the cooling load is constant all-year-round or the outdoor air temperature is lower than the temperature of the liquid return line. In free cooling mode, the liquid is cooled by outdoor air, thus lowering the load of the compressors until it is reduced to zero.
The NG configuration complies with applications where it is not allowed or desired the use of ethylene glycol.

Version

K	Key efficiency, compact version
CA	High energy efficiency units

Configurations

-	Basic function
NG	Function for free-cooling without use of glycole

Features

ENERGY SAVING
Energy saving guaranteed by free-cooling, which exploits the low external air temperatures; free-cooling control with optional modulating valve.
VERY HIGH EFFICIENCY
Top-level seasonal efficiency thanks to technlogical solutions at the forefront: magnetic levitation centrifugal compressors, flooded evaporator, EC fans and advanced control algorithms.
WIDE RANGE
Extended capacity range.
LOW INRUSH CURRENTS
Reduced breakaway starting currents thanks to the revolutionary centrifugal compressor.
EXTREMELY SILENT OPERATION
Extremely silent operation in line with the best on the market, and highly reduced vibrations
INTEGRATED HYDRONIC GROUP
It consists of 2 pumps with 4-pole motor, fixed or variable speed, with high or low head options to satisfy different industrial or IT-cooling applications and demands for comfort.

Accessory

- Modulating valve for water temperature control in Free-Cooling mode
- Hydronic group
- VPF (Variable Primary Flow) kit: variable flow pumps with on board regulation
- Fast restart
- Double power supply with automatic changeover (ATS) or motorized changeover
- Compressor power factor correction
- Set-up for remote connectivity with ModBus/Echelon protocol cards
- Touch Screen visual display
- Remote control keyboard (distance to 200m and to 500m)

Controls

Electronic control W3000 TE
The brand new W3000TE controller offers advanced functions and algorithms. The large format keyboard and the wide LCD display favour an easy and safe access to the machine setup and a complete view of unit's staus. The assessment and intervention on the unit is managed through a multi-level menu, with selectable user's language. The led icons immediately show the operating status of the circuits, as well as of the fans and of the water pumps (if present). An optional extra is the touch screen interface: 7.0" WVGA colour display with adjustable LED backlight and front USB port. The touch screen technology allows intuitive navigation between the various screens, safe access to the data with a three-level password protection as well as the graphic display of the performance of some monitored measurements.
The diagnostics comprises a complete alarm management system, with "black box" (via PC) and alarm log functions (via display or also PC) for a better analysis of the unit performance.
For the systems made of several units, the adjustment of the resources is performed by optional proprietary devices.
Consumption metering and performance measurement are possible as well. Supervision can be easily developed via proprietary devices or the integration in third party systems by means of the most common protocols as ModBus, Bacnet-over-IP, Echelon LonWorks, Bacnet MS/TP protocols.
Compatibility with the remote keyboard managing up to 8 units.
The presence of the programmable timer allows the creation of an operating profile containing up to 4 typical days and 10 time bands.
The control is characterized by the continuous modulation of the unit capacity, based on PID algorithms and referring to the water delivery temperature.
Optionally (VPF package), capacity modulation can be integrated with hydraulic flow modulation, thanks to inverter-driven pumps and to specific resources for the hydraulic circuit.



TECS-FC /K			0211	0351	0452	0552	0652	0712
Power supply		V/ph/Hz	400/3/50	400/3/50	400/3/50	400/3/50	400/3/50	400/3/50
PERFORMANCE								
COOLING ONLY (GROSS VALUE)								
Cooling capacity	(1)	kW	302	483	594	689	943	980
Total power input	(1)	kW	87,1	141	179	181	285	275
EER	(1)	kW/kW	3,47	3,43	3,33	3,81	3,31	3,56
COOLING ONLY (EN14511 VALUE)								
Cooling capacity	(1)(2)	kW	300	479	590	684	936	973
EER	(1)(2)	kW/kW	3,36	3,31	3,23	3,67	3,21	3,44
FREE-COOLING TOTALE (GROSS VALUE)								
Cooling capacity	(3)	kW	302	483	594	689	943	980
EER	(3)	kW/kW	59,25	50,28	49,52	67,55	56,15	51,05
Total free-cooling temperature	(3)	°C	-1,9	-2,5	-1,9	-1,4	-2,7	-1,4
ENERGY EFFICIENCY								
SEASONAL EFFICIENCY IN COOLING (Reg. EU 2016/2281)								
Ambient refrigeration								
Prated,c	(8)	kW	261	414	507	608	800	851
SEER	(8)(9)		4,91	4,62	4,66	5,23	4,73	4,77
Performance ηs	(8)(10)	%	193	182	184	206	186	188
EXCHANGERS								
HEAT EXCHANGER USER SIDE IN REFRIGERATION								
Water flow	(1)	l/s	16,01	25,57	31,48	36,50	49,98	51,93
Pressure drop	(1)	kPa	86,0	98,6	89,3	104	104	107
REFRIGERANT CIRCUIT								
Compressors nr.		N°	1	1	2	2	2	2
No. Circuits		N°	1	1	1	1	1	1
Refrigerant charge		kg	120	140	260	260	320	320
NOISE LEVEL								
Sound Pressure	(4)	dB(A)	56	61	62	58	63	63
Sound power level in cooling	(5)(6)	dB(A)	88	93	94	91	96	96
SIZE AND WEIGHT								
A	(7)	mm	4000	4000	4900	6400	7000	7900
B	(7)	mm	2260	2260	2260	2260	2260	2260
H	(7)	mm	2500	2500	2500	2500	2500	2500
Operating weight	(7)	kg	3430	3850	5080	5820	6340	6900

TECS-FC /K			0903	0953	1003	1164	1204
Power supply		V/ph/Hz	400/3/50	400/3/50	400/3/50	400/3/50	400/3/50
PERFORMANCE							
COOLING ONLY (GROSS VALUE)							
Cooling capacity	(1)	kW	1185	1253	1421	1578	1649
Total power input	(1)	kW	320	373	425	455	461
EER	(1)	kW/kW	3,70	3,36	3,35	3,47	3,58
COOLING ONLY (EN14511 VALUE)							
Cooling capacity	(1)(2)	kW	1177	1246	1411	1567	1637
EER	(1)(2)	kW/kW	3,59	3,28	3,25	3,36	3,46
FREE-COOLING TOTALE (GROSS VALUE)							
Cooling capacity	(3)	kW	1185	1253	1421	1578	1649
EER	(3)	kW/kW	49,38	52,21	53,83	50,58	52,85
Total free-cooling temperature	(3)	°C	-1,2	-2,7	-2,5	-1,6	-1,8
ENERGY EFFICIENCY							
SEASONAL EFFICIENCY IN COOLING (Reg. EU 2016/2281)							
Ambient refrigeration							
Prated,c	(8)	kW	1045	1069	1212	1361	1435
SEER	(8)(9)		4,62	4,46	4,53	4,38	4,41
Performance ηs	(8)(10)	%	182	175	178	172	173
EXCHANGERS							
HEAT EXCHANGER USER SIDE IN REFRIGERATION							
Water flow	(1)	l/s	62,78	66,38	75,30	83,61	87,35
Pressure drop	(1)	kPa	91,8	80,2	103	106	115
REFRIGERANT CIRCUIT							
Compressors nr.		N°	3	3	3	4	4
No. Circuits		N°	2	2	2	2	2
Refrigerant charge		kg	430	520	520	540	540
NOISE LEVEL							
Sound Pressure	(4)	dB(A)	64	64	65	65	65
Sound power level in cooling	(5)(6)	dB(A)	97	97	98	98	98
SIZE AND WEIGHT							
A	(7)	mm	10600	11200	11200	13000	13600
B	(7)	mm	2260	2260	2260	2260	2260
H	(7)	mm	2500	2500	2500	2500	2500
Operating weight	(7)	kg	9750	10260	10530	12290	12350

Notes:
1 Plant (side) cooling exchanger water (in/out) 15°C/10°C; Source (side) heat exchanger air (in) 30°C; Ethylene glycol 30%.
2 Values in compliance with EN14511-3:2013.
3 Plant (side) cooling exchanger water (in/out) 15°C/10°C; Ethylene glycol 30%.
4 Average sound pressure level at 10m distance, unit in a free field on a reflective surface; non-binding value calculated from the sound power level.
5 Sound power on the basis of measurements made in compliance with ISO 9614.
6 Sound power level in cooling, outdoors.
7 Unit in standard configuration/execution, without optional accessories.
8 Seasonal energy efficiency of the cooling environment [REGULATION (EU) N. 2016/2281]
9 Seasonal space heating energy index
10 Seasonal energy efficiency of the space cooling
The units highlighted in this publication contain HFC R134a [GWP_{100} 1430] fluorinated greenhouse gases.

TECS-FC /CA			0211	0251	0351	0452	0552	0712	0803	0903	1003
Power supply		V/ph/Hz	400/3/50	400/3/50	400/3/50	400/3/50	400/3/50	400/3/50	400/3/50	400/3/50	400/3/50
PERFORMANCE											
COOLING ONLY (GROSS VALUE)											
Cooling capacity	(1)	kW	310	354	496	616	714	990	1068	1209	1446
Total power input	(1)	kW	85,4	89,8	134	173	177	268	267	308	412
EER	(1)	kW/kW	3,63	3,94	3,69	3,56	4,03	3,69	4,00	3,92	3,51
COOLING ONLY (EN14511 VALUE)											
Cooling capacity	(1)(2)	kW	307	351	492	611	708	983	1062	1201	1436
EER	(1)(2)	kW/kW	3,50	3,79	3,56	3,44	3,87	3,56	3,90	3,80	3,40
FREE-COOLING TOTALE (GROSS VALUE)											
Cooling capacity	(3)	kW	310	354	496	616	714	990	1068	1209	1446
EER	(3)	kW/kW	60,71	52,04	58,36	60,37	52,51	58,25	52,35	54,71	65,43
Total free-cooling temperature	(3)	°C	-0,1	-0,2	-1,0	-0,5	0,4	-0,9	0,2	0,0	-1,6
ENERGY EFFICIENCY											
SEASONAL EFFICIENCY IN COOLING (Reg. EU 2016/2281)											
Ambient refrigeration											
Prated,c	(8)	kW	271	319	434	535	650	867	972	1086	1244
SEER	(8)(9)		5,04	4,95	5,05	5,18	5,26	5,16	5,21	5,06	4,94
Performance ηs	(8)(10)	%	199	195	199	204	207	204	205	199	195
EXCHANGERS											
HEAT EXCHANGER USER SIDE IN REFRIGERATION											
Water flow	(1)	l/s	16,40	18,75	26,28	32,63	37,83	52,47	56,60	64,05	76,60
Pressure drop	(1)	kPa	90,3	96,3	104	95,9	111	109	74,6	95,6	107
REFRIGERANT CIRCUIT											
Compressors nr.		N°	1	1	1	2	2	2	3	3	3
No. Circuits		N°	1	1	1	1	1	1	2	2	2
Refrigerant charge		kg	120	120	140	260	280	320	430	430	520
NOISE LEVEL											
Sound Pressure	(4)	dB(A)	56	57	58	58	59	60	61	61	61
Sound power level in cooling	(5)(6)	dB(A)	88	89	90	91	92	93	94	94	94
SIZE AND WEIGHT											
A	(7)	mm	4000	4000	4900	6400	7900	10000	12100	13000	13000
B	(7)	mm	2260	2260	2260	2260	2260	2260	2260	2260	2260
H	(7)	mm	2500	2500	2500	2500	2500	2500	2500	2500	2500
Operating weight	(7)	kg	3660	3790	4380	5720	6770	8870	10530	11370	11730

Notes:
1 Plant (side) cooling exchanger water (in/out) 15°C/10°C; Source (side) heat exchanger air (in) 30°C; Ethylene glycol 30%.
2 Values in compliance with EN14511-3:2013.
3 Plant (side) cooling exchanger water (in/out) 15°C/10°C; Ethylene glycol 30%.
4 Average sound pressure level at 10m distance, unit in a free field on a reflective surface; non-binding value calculated from the sound power level.
5 Sound power on the basis of measurements made in compliance with ISO 9614.
6 Sound power level in cooling, outdoors.
7 Unit in standard configuration/execution, without optional accessories.
8 Seasonal energy efficiency of the cooling environment [REGULATION (EU) N. 2016/2281]
9 Seasonal space heating energy index
10 Seasonal energy efficiency of the space cooling
The units highlighted in this publication contain HFC R134a [GWP_{100} 1430] fluorinated greenhouse gases.

TECS-FC /NG /K			0211	0351	0452	0552	0652	0712
Power supply		V/ph/Hz	400/3/50	400/3/50	400/3/50	400/3/50	400/3/50	400/3/50
PERFORMANCE								
COOLING ONLY (GROSS VALUE)								
Cooling capacity	(1)	kW	310	496	610	708	969	1007
Total power input	(1)	kW	87,6	142	180	182	287	277
EER	(1)	kW/kW	3,54	3,50	3,40	3,89	3,38	3,64
COOLING ONLY (EN14511 VALUE)								
Cooling capacity	(1)(2)	kW	308	491	606	701	961	999
EER	(1)(2)	kW/kW	3,43	3,37	3,29	3,73	3,26	3,51
FREE-COOLING TOTALE (GROSS VALUE)								
Cooling capacity	(3)	kW	310	496	610	708	969	1007
EER	(3)	kW/kW	38,32	32,83	31,29	39,98	30,47	29,44
Total free-cooling temperature	(3)	°C	-4,9	-5,5	-5,0	-4,5	-5,8	-4,5
ENERGY EFFICIENCY								
SEASONAL EFFICIENCY IN COOLING (Reg. EU 2016/2281)								
Ambient refrigeration								
Prated,c	(8)	kW	260	413	506	606	798	849
SEER	(8)(9)		4,74	4,42	4,47	4,92	4,51	4,57
Performance ηs	(8)(10)	%	187	174	176	194	177	180
EXCHANGERS								
HEAT EXCHANGER USER SIDE IN REFRIGERATION								
Water flow	(1)	l/s	14,85	23,72	29,20	33,86	46,37	48,17
Pressure drop	(1)	kPa	98,1	128	112	137	135	130
REFRIGERANT CIRCUIT								
Compressors nr.		N°	1	1	2	2	2	2
No. Circuits		N°	1	1	1	1	1	1
Refrigerant charge		kg	120	140	260	260	320	320
NOISE LEVEL								
Sound Pressure	(4)	dB(A)	56	61	62	58	63	63
Sound power level in cooling	(5)(6)	dB(A)	88	93	94	91	96	96
SIZE AND WEIGHT								
A	(7)	mm	4000	4000	4900	6400	7000	7900
B	(7)	mm	2260	2260	2260	2260	2260	2260
H	(7)	mm	2500	2500	2500	2500	2500	2500
Operating weight	(7)	kg	4120	4620	6100	6990	7610	8280

TECS-FC /NG /K			0903	0953	1003	1164	1204
Power supply		V/ph/Hz	400/3/50	400/3/50	400/3/50	400/3/50	400/3/50
PERFORMANCE							
COOLING ONLY (GROSS VALUE)							
Cooling capacity	(1)	kW	1217	1287	1460	1621	1693
Total power input	(1)	kW	322	375	427	457	463
EER	(1)	kW/kW	3,78	3,43	3,42	3,55	3,66
COOLING ONLY (EN14511 VALUE)							
Cooling capacity	(1)(2)	kW	1208	1278	1448	1606	1677
EER	(1)(2)	kW/kW	3,66	3,33	3,30	3,41	3,50
FREE-COOLING TOTALE (GROSS VALUE)							
Cooling capacity	(3)	kW	1217	1287	1460	1621	1693
EER	(3)	kW/kW	31,21	30,28	30,17	26,49	27,66
Total free-cooling temperature	(3)	°C	-4,3	-5,7	-5,6	-4,7	-4,9
ENERGY EFFICIENCY							
SEASONAL EFFICIENCY IN COOLING (Reg. EU 2016/2281)							
Ambient refrigeration							
Prated,c	(8)	kW	1043	1067	1209	1357	1430
SEER	(8)(9)		4,45	4,28	4,31	4,15	4,14
Performance ηs	(8)(10)	%	175	168	170	163	163
EXCHANGERS							
HEAT EXCHANGER USER SIDE IN REFRIGERATION							
Water flow	(1)	l/s	58,24	61,58	69,85	77,56	81,03
Pressure drop	(1)	kPa	113	110	140	154	169
REFRIGERANT CIRCUIT							
Compressors nr.		N°	3	3	3	4	4
No. Circuits		N°	2	2	2	2	2
Refrigerant charge		kg	430	520	520	540	540
NOISE LEVEL							
Sound Pressure	(4)	dB(A)	64	64	65	65	65
Sound power level in cooling	(5)(6)	dB(A)	97	97	98	98	98
SIZE AND WEIGHT							
A	(7)	mm	10600	11200	11200	13000	13600
B	(7)	mm	2260	2260	2260	2260	2260
H	(7)	mm	2500	2500	2500	2500	2500
Operating weight	(7)	kg	11700	12320	12640	14750	14820

Notes:
1 Plant (side) cooling exchanger water (in/out) 15°C/10°C; Source (side) heat exchanger air (in) 30°C; Ethylene glycol 0%.
2 Values in compliance with EN14511-3:2013.
3 Plant (side) cooling exchanger water (in/out) 15°C/10°C; Ethylene glycol 0%.
4 Average sound pressure level at 10m distance, unit in a free field on a reflective surface; non-binding value calculated from the sound power level.
5 Sound power on the basis of measurements made in compliance with ISO 9614.
6 Sound power level in cooling, outdoors.
7 Unit in standard configuration/execution, without optional accessories.
8 Seasonal energy efficiency of the cooling environment [REGULATION (EU) N. 2016/2281]
9 Seasonal space heating energy index
10 Seasonal energy efficiency of the space cooling
The units highlighted in this publication contain HFC R134a [GWP_{100} 1430] fluorinated greenhouse gases.

TECS-FC /NG /CA			0211	0251	0351	0452	0552	0712	0803	0903	1003
Power supply		V/ph/Hz	400/3/50	400/3/50	400/3/50	400/3/50	400/3/50	400/3/50	400/3/50	400/3/50	400/3/50
PERFORMANCE											
COOLING ONLY (GROSS VALUE)											
Cooling capacity	(1)	kW	318	363	509	632	733	1017	1097	1242	1485
Total power input	(1)	kW	85,9	90,3	135	174	178	270	268	310	414
EER	(1)	kW/kW	3,70	4,03	3,78	3,63	4,12	3,77	4,09	4,01	3,58
COOLING ONLY (EN14511 VALUE)											
Cooling capacity	(1)(2)	kW	316	360	505	627	726	1009	1090	1233	1472
EER	(1)(2)	kW/kW	3,57	3,86	3,62	3,50	3,93	3,63	3,97	3,87	3,45
FREE-COOLING TOTALE (GROSS VALUE)											
Cooling capacity	(3)	kW	318	363	509	632	733	1017	1097	1242	1485
EER	(3)	kW/kW	39,26	29,55	36,39	40,28	29,81	31,78	30,99	30,59	33,67
Total free-cooling temperature	(3)	°C	-3,2	-3,2	-4,1	-3,6	-2,7	-4,0	-2,9	-3,1	-4,7
ENERGY EFFICIENCY											
SEASONAL EFFICIENCY IN COOLING (Reg. EU 2016/2281)											
Ambient refrigeration											
Prated,c	(8)	kW	270	318	433	533	648	865	970	1084	1241
SEER	(8)(9)		4,87	4,69	4,82	4,94	4,91	4,91	5,00	4,83	4,67
Performance ηs	(8)(10)	%	192	184	190	194	193	194	197	190	184
EXCHANGERS											
HEAT EXCHANGER USER SIDE IN REFRIGERATION											
Water flow	(1)	l/s	15,22	17,39	24,38	30,26	35,10	48,67	52,51	59,42	71,06
Pressure drop	(1)	kPa	103	120	131	120	147	133	92,2	117	145
REFRIGERANT CIRCUIT											
Compressors nr.		N°	1	1	1	2	2	2	3	3	3
No. Circuits		N°	1	1	1	1	1	1	2	2	2
Refrigerant charge		kg	120	120	140	260	280	320	430	430	520
NOISE LEVEL											
Sound Pressure	(4)	dB(A)	56	57	58	58	59	60	61	61	61
Sound power level in cooling	(5)(6)	dB(A)	88	89	90	91	92	93	94	94	94
SIZE AND WEIGHT											
A	(7)	mm	4000	4000	4900	6400	7900	10000	12100	13000	13000
B	(7)	mm	2260	2260	2260	2260	2260	2260	2260	2260	2260
H	(7)	mm	2500	2500	2500	2500	2500	2500	2500	2500	2500
Operating weight	(7)	kg	4400	4550	5260	6870	8130	10650	12640	13650	14080

Notes:
1 Plant (side) cooling exchanger water (in/out) 15°C/10°C; Source (side) heat exchanger air (in) 30°C; Ethylene glycol 0%.
2 Values in compliance with EN14511-3:2013.
3 Plant (side) cooling exchanger water (in/out) 15°C/10°C; Ethylene glycol 0%.
4 Average sound pressure level at 10m distance, unit in a free field on a reflective surface; non-binding value calculated from the sound power level.
5 Sound power on the basis of measurements made in compliance with ISO 9614.
6 Sound power level in cooling, outdoors.
7 Unit in standard configuration/execution, without optional accessories.
8 Seasonal energy efficiency of the cooling environment [REGULATION (EU) N. 2016/2281]
9 Seasonal space heating energy index
10 Seasonal energy efficiency of the space cooling
The units highlighted in this publication contain HFC R134a [GWP_{100} 1430] fluorinated greenhouse gases.

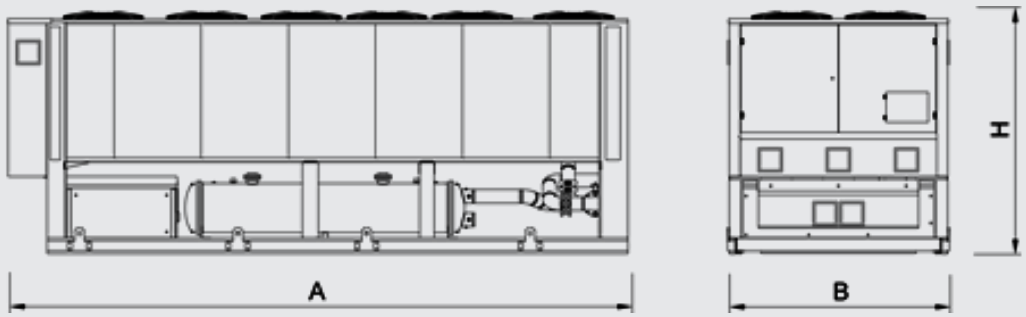

CHILLERS

TECS-EFC 0211 - 1204

High efficiency air cooled chiller with evaporative free-cooling 300-1682 kW



Outdoor unit for the production of chilled water, equipped with oil-free centrifugal compressors, R134a refrigerant, axial EC fans, condensing coil with copper tubes and aluminum fins, shell and tube flooded evaporator and electronic expansion valve. Base, supporting structure and panels are of galvanized epoxy powder coated steel. The unit is supplied with refrigerant and has been factory tested. On-site installation therefore just involves making connections to the mains power and water supplies.
The rotor speed digital control allows an accurate and efficient thermoregulation in every operating condition. The economizer improves the refrigerant circuit efficiency (not present in sizes 0211 and 0452).
These chillers, fitted with free-cooling coils and evaporative cooling system, are used in IT-cooling, industrial and civil applications, when the cooling load is constant all-year-round.
In free cooling mode, the liquid is cooled by outdoor air, thus lowering the load of the compressors until it is reduced to zero. The evaporative cooling system is made of treated cellulose pads and a water circulator that keeps the pads wet. It lowers the air temperature before it reaches unit's coils, thus increasing mechanical cooling efficiency and allowing free-cooling benefits to begin at higher outdoor temperatures.
The NG configuration complies with applications where it is not allowed or desired the use of ethylene glycol.

Version

K	Key efficiency, compact version
CA	High energy efficiency units

Configurations

-	Basic function
NG	Function for free-cooling without use of glycole

Features

EXTENSION OF FREE-COOLING TEMPERATURE RANGE
Thanks to the evaporative cooling system that decreases the outdoor air temperature, the unit can take full advantage of the free-cooling benefit also in climatic conditions that normally don't permit it.
ENERGY SAVING
Energy saving guaranteed by free-cooling, which exploits the low external air temperatures; free-cooling control with optional modulating valve.
VERY HIGH EFFICIENCY
Top-level seasonal efficiency thanks to technlogical solutions at the forefront: magnetic levitation centrifugal compressors, flooded evaporator, EC fans and advanced control algorithms.
WIDE RANGE
Extended capacity range.
LOW INRUSH CURRENTS
Reduced breakaway starting currents thanks to the revolutionary centrifugal compressor.
EXTREMELY SILENT OPERATION
Extremely silent operation in line with the best on the market, and highly reduced vibrations
INTEGRATED HYDRONIC GROUP
It consists of 2 pumps with 4-pole motor, fixed or variable speed, with high or low head options to satisfy different industrial or IT-cooling applications and demands for comfort.

Accessory

- Modulating valve for water temperature control in Free-Cooling mode
- Hydronic group
- VPF (Variable Primary Flow) kit: variable flow pumps with on board regulation
- Fast restart
- Double power supply with automatic changeover (ATS) or motorized changeover
- Compressor power factor correction
- Set-up for remote connectivity with ModBus/Echelon protocol cards
- Touch Screen visual display
- Remote control keyboard (distance to 200m and to 500m)

Controls

Electronic control W3000 TE
The brand new W3000TE controller offers advanced functions and algorithms. The large format keyboard and the wide LCD display favour an easy and safe access to the machine setup and a complete view of unit's staus. The assessment and intervention on the unit is managed through a multi-level menu, with selectable user's language. The led icons immediately show the operating status of the circuits, as well as of the fans and of the water pumps (if present). An optional extra is the touch screen interface: 7.0" WVGA colour display with adjustable LED backlight and front USB port. The touch screen technology allows intuitive navigation between the various screens, safe access to the data with a three-level password protection as well as the graphic display of the performance of some monitored measurements.
The diagnostics comprises a complete alarm management system, with "black box" (via PC) and alarm log functions (via display or also PC) for a better analysis of the unit performance.
For the systems made of several units, the adjustment of the resources is performed by optional proprietary devices.
Consumption metering and performance measurement are possible as well. Supervision can be easily developed via proprietary devices or the integration in third party systems by means of the most common protocols as ModBus, Bacnet-over-IP, Echelon LonWorks, Bacnet MS/TP protocols.
Compatibility with the remote keyboard managing up to 8 units.
The presence of the programmable timer allows the creation of an operating profile containing up to 4 typical days and 10 time bands.
The control is characterized by the continuous modulation of the unit capacity, based on PID algorithms and referring to the water delivery temperature.
Optionally (VPF package), capacity modulation can be integrated with hydraulic flow modulation, thanks to inverter-driven pumps and to specific resources for the hydraulic circuit.



TECS-EFC /K			0211	0351	0452	0552	0652	0712
Power supply		V/ph/Hz	400/3/50	400/3/50	400/3/50	400/3/50	400/3/50	400/3/50
PERFORMANCE								
COOLING ONLY (GROSS VALUE)								
Cooling capacity	(1)	kW	300	479	590	685	935	974
EER	(1)	kW/kW	4,06	4,23	3,98	4,33	4,25	4,29
EER (evaporative system OFF)	(1)	kW/kW	3,43	3,37	3,29	3,77	3,25	3,51
COOLING ONLY (EN14511 VALUE)								
Cooling capacity	(1)(2)	kW	298	476	586	680	928	967
EER	(1)(2)	kW/kW	3,91	4,07	3,85	4,16	4,09	4,12
EER (evaporative system OFF)	(1)(2)	kW/kW	3,32	3,26	3,20	3,64	3,16	3,39
FREE-COOLING TOTALE (GROSS VALUE)								
Cooling capacity	(3)	kW	300	479	590	685	935	974
EER	(3)	kW/kW	58,86	49,91	49,13	67,14	55,65	50,74
Total free-cooling temperature	(3)	°C	-2,3	-2,8	-2,3	-1,8	-3,1	-1,9
COOLING ONLY - maximum cooling capacity (GROSS VALUE)								
Cooling capacity	(1)	kW	318	507	631	718	1004	1016
EER	(1)	kW/kW	3,82	3,96	3,69	4,16	3,86	4,10
COOLING ONLY - maximum cooling capacity (EN14511 VALUE)								
Cooling capacity	(1)(2)	kW	315	503	626	712	996	1008
EER	(1)(2)	kW/kW	3,68	3,80	3,56	3,99	3,71	3,94
ENERGY EFFICIENCY								
SEASONAL EFFICIENCY IN COOLING (Reg. EU 2016/2281)								
Ambient refrigeration								
Prated,c	(8)	kW	258	409	501	601	788	841
SEER	(8)(9)		4,63	4,45	4,49	5,04	4,58	4,61
Performance ηs	(8)(10)	%	182	175	177	199	180	182
EXCHANGERS								
HEAT EXCHANGER USER SIDE IN REFRIGERATION								
Water flow	(1)	l/s	15,91	25,38	31,23	36,28	49,54	51,62
Pressure drop	(1)	kPa	85,1	97,4	88,1	103	102	106
REFRIGERANT CIRCUIT								
Compressors nr.		N°	1	1	2	2	2	2
No. Circuits		N°	1	1	1	1	1	1
Refrigerant charge		kg	120	140	260	260	320	320
NOISE LEVEL								
Sound Pressure	(4)	dB(A)	56	61	62	58	63	63
Sound power level in cooling	(5)(6)	dB(A)	88	93	94	91	96	96
SIZE AND WEIGHT								
A	(7)	mm	4000	4000	4900	6400	7000	7900
B	(7)	mm	3060	3060	3060	3060	3060	3060
H	(7)	mm	2500	2500	2500	2500	2500	2500
Operating weight	(7)	kg	3760	4180	5490	6360	6940	7580

Notes:
1 Plant (side) cooling exchanger water (in/out) 15°C/10°C; Source (side) heat exchanger air (in) 30°C - 50% R.H.; Ethylene glycol 30%.
2 Values in compliance with EN14511-3:2013.
3 Plant (side) cooling exchanger water (in/out) 15°C/10°C; Ethylene glycol 30%.
4 Average sound pressure level at 10m distance, unit in a free field on a reflective surface; non-binding value calculated from the sound power level.
5 Sound power on the basis of measurements made in compliance with ISO 9614.
6 Sound power level in cooling, outdoors.
7 Unit in standard configuration/execution, without optional accessories.
8 Seasonal energy efficiency of the cooling environment [REGULATION (EU) N. 2016/2281]
9 Seasonal space heating energy index
10 Seasonal energy efficiency of the space cooling
The units highlighted in this publication contain HFC R134a [GWP_{100} 1430] fluorinated greenhouse gases.

TECS-EFC /K			0903	0953	1003	1164	1204
Power supply		V/ph/Hz	400/3/50	400/3/50	400/3/50	400/3/50	400/3/50
PERFORMANCE							
COOLING ONLY (GROSS VALUE)							
Cooling capacity	(1)	kW	1179	1243	1409	1567	1638
EER	(1)	kW/kW	4,26	4,18	4,24	4,17	4,24
EER (evaporative system OFF)	(1)	kW/kW	3,66	3,31	3,29	3,42	3,53
COOLING ONLY (EN14511 VALUE)							
Cooling capacity	(1)(2)	kW	1171	1236	1399	1556	1626
EER	(1)(2)	kW/kW	4,12	4,06	4,09	4,02	4,08
EER (evaporative system OFF)	(1)(2)	kW/kW	3,56	3,23	3,20	3,32	3,42
FREE-COOLING TOTALE (GROSS VALUE)							
Cooling capacity	(3)	kW	1179	1243	1409	1567	1638
EER	(3)	kW/kW	49,13	51,79	53,37	50,22	52,50
Total free-cooling temperature	(3)	°C	-1,7	-3,0	-2,9	-2,1	-2,2
COOLING ONLY - maximum cooling capacity (GROSS VALUE)							
Cooling capacity	(1)	kW	1225	1328	1505	1653	1721
EER	(1)	kW/kW	4,12	3,85	3,89	3,93	4,03
COOLING ONLY - maximum cooling capacity (EN14511 VALUE)							
Cooling capacity	(1)(2)	kW	1217	1320	1493	1640	1707
EER	(1)(2)	kW/kW	3,98	3,73	3,75	3,79	3,87
ENERGY EFFICIENCY							
SEASONAL EFFICIENCY IN COOLING (Reg. EU 2016/2281)							
Ambient refrigeration							
Prated,c	(8)	kW	1034	1054	1195	1344	1418
SEER	(8)(9)		4,46	4,30	4,39	4,23	4,26
Performance ηs	(8)(10)	%	175	169	173	166	167
EXCHANGERS							
HEAT EXCHANGER USER SIDE IN REFRIGERATION							
Water flow	(1)	l/s	62,46	65,84	74,63	83,03	86,79
Pressure drop	(1)	kPa	91,1	79,1	102	105	114
REFRIGERANT CIRCUIT							
Compressors nr.		N°	3	3	3	4	4
No. Circuits		N°	2	2	2	2	2
Refrigerant charge		kg	430	520	520	540	540
NOISE LEVEL							
Sound Pressure	(4)	dB(A)	64	64	65	65	65
Sound power level in cooling	(5)(6)	dB(A)	97	97	98	98	98
SIZE AND WEIGHT							
A	(7)	mm	10600	11200	11200	13000	13600
B	(7)	mm	3060	3060	3060	3060	3060
H	(7)	mm	2500	2500	2500	2500	2500
Operating weight	(7)	kg	10670	11240	11510	13430	13540

Notes:
1 Plant (side) cooling exchanger water (in/out) 15°C/10°C; Source (side) heat exchanger air (in) 30°C - 50% R.H.; Ethylene glycol 30%.
2 Values in compliance with EN14511-3:2013.
3 Plant (side) cooling exchanger water (in/out) 15°C/10°C; Ethylene glycol 30%.
4 Average sound pressure level at 10m distance, unit in a free field on a reflective surface; non-binding value calculated from the sound power level.
5 Sound power on the basis of measurements made in compliance with ISO 9614.
6 Sound power level in cooling, outdoors.
7 Unit in standard configuration/execution, without optional accessories.
8 Seasonal energy efficiency of the cooling environment [REGULATION (EU) N. 2016/2281]
9 Seasonal space heating energy index
10 Seasonal energy efficiency of the space cooling
The units highlighted in this publication contain HFC R134a [GWP_{100} 1430] fluorinated greenhouse gases.

TECS-EFC /CA			0211	0251	0351	0452	0552	0712	0803	0903	1003
Power supply		V/ph/Hz	400/3/50	400/3/50	400/3/50	400/3/50	400/3/50	400/3/50	400/3/50	400/3/50	400/3/50
PERFORMANCE											
COOLING ONLY (GROSS VALUE)											
Cooling capacity	(1)	kW	308	353	494	612	712	985	1065	1205	1436
EER	(1)	kW/kW	4,16	4,35	4,38	4,14	4,43	4,37	4,42	4,41	4,32
EER (evaporative system OFF)	(1)	kW/kW	3,59	3,90	3,64	3,52	3,99	3,64	3,97	3,88	3,45
COOLING ONLY (EN14511 VALUE)											
Cooling capacity	(1)(2)	kW	306	350	490	608	706	978	1059	1197	1426
EER	(1)(2)	kW/kW	4,00	4,17	4,19	4,00	4,24	4,20	4,29	4,25	4,16
EER (evaporative system OFF)	(1)(2)	kW/kW	3,47	3,76	3,51	3,41	3,84	3,51	3,86	3,76	3,35
FREE-COOLING TOTALE (GROSS VALUE)											
Cooling capacity	(3)	kW	308	353	494	612	712	985	1065	1205	1436
EER	(3)	kW/kW	60,39	51,85	58,06	60,01	52,36	57,95	52,21	54,52	64,98
Total free-cooling temperature	(3)	°C	-0,6	-0,6	-1,4	-0,9	-0,1	-1,3	-0,2	-0,5	-2,0
COOLING ONLY - maximum cooling capacity (GROSS VALUE)											
Cooling capacity	(1)	kW	321	360	510	643	721	1018	1081	1226	1513
EER	(1)	kW/kW	3,99	4,28	4,23	3,94	4,39	4,23	4,37	4,34	4,06
COOLING ONLY - maximum cooling capacity (EN14511 VALUE)											
Cooling capacity	(1)(2)	kW	318	357	505	638	715	1010	1075	1218	1501
EER	(1)(2)	kW/kW	3,84	4,10	4,05	3,79	4,20	4,06	4,24	4,19	3,90
ENERGY EFFICIENCY											
SEASONAL EFFICIENCY IN COOLING (Reg. EU 2016/2281)											
Ambient refrigeration											
Prated,c	(8)	kW	268	317	430	529	646	858	965	1077	1229
SEER	(8)(9)		4,76	4,72	4,86	4,99	5,01	4,95	5,00	4,84	4,76
Performance ηs	(8)(10)	%	187	186	191	196	197	195	197	191	187
EXCHANGERS											
HEAT EXCHANGER USER SIDE IN REFRIGERATION											
Water flow	(1)	l/s	16,32	18,68	26,14	32,43	37,72	52,18	56,41	63,86	76,09
Pressure drop	(1)	kPa	89,6	95,8	103	95,0	111	108	74,2	95,2	106
REFRIGERANT CIRCUIT											
Compressors nr.		N°	1	1	1	2	2	2	3	3	3
No. Circuits		N°	1	1	1	1	1	1	2	2	2
Refrigerant charge		kg	120	120	140	260	280	320	430	430	520
NOISE LEVEL											
Sound Pressure	(4)	dB(A)	56	57	58	58	59	60	61	61	61
Sound power level in cooling	(5)(6)	dB(A)	88	89	90	91	92	93	94	94	94
SIZE AND WEIGHT											
A	(7)	mm	4000	4000	4900	6400	7900	10000	12100	13000	13000
B	(7)	mm	3060	3060	3060	3060	3060	3060	3060	3060	3060
H	(7)	mm	2500	2500	2500	2500	2500	2500	2500	2500	2500
Operating weight	(7)	kg	3990	4120	4790	6260	7450	9740	11590	12510	12870

Notes:
1 Plant (side) cooling exchanger water (in/out) 15°C/10°C; Source (side) heat exchanger air (in) 30°C - 50% R.H.; Ethylene glycol 30%.
2 Values in compliance with EN14511-3:2013.
3 Plant (side) cooling exchanger water (in/out) 15°C/10°C; Ethylene glycol 30%.
4 Average sound pressure level at 10m distance, unit in a free field on a reflective surface; non-binding value calculated from the sound power level.
5 Sound power on the basis of measurements made in compliance with ISO 9614.
6 Sound power level in cooling, outdoors.
7 Unit in standard configuration/execution, without optional accessories.
8 Seasonal energy efficiency of the cooling environment [REGULATION (EU) N. 2016/2281]
9 Seasonal space heating energy index
10 Seasonal energy efficiency of the space cooling
The units highlighted in this publication contain HFC R134a [GWP_{100} 1430] fluorinated greenhouse gases.

TECS-EFC /NG /K			0211	0351	0452	0552	0652	0712
Power supply		V/ph/Hz	400/3/50	400/3/50	400/3/50	400/3/50	400/3/50	400/3/50
PERFORMANCE								
COOLING ONLY (GROSS VALUE)								
Cooling capacity	(1)	kW	308	492	605	703	960	1001
EER	(1)	kW/kW	4,15	4,32	4,07	4,43	4,34	4,38
EER (evaporative system OFF)	(1)	kW/kW	3,51	3,45	3,36	3,86	3,32	3,59
COOLING ONLY (EN14511 VALUE)								
Cooling capacity	(1)(2)	kW	306	488	601	697	952	993
EER	(1)(2)	kW/kW	4,00	4,13	3,92	4,22	4,15	4,20
EER (evaporative system OFF)	(1)(2)	kW/kW	3,39	3,32	3,26	3,70	3,21	3,46
FREE-COOLING TOTALE (GROSS VALUE)								
Cooling capacity	(3)	kW	308	492	605	703	960	1001
EER	(3)	kW/kW	38,06	32,58	31,05	39,73	30,19	29,27
Total free-cooling temperature	(3)	°C	-5,3	-5,9	-5,4	-4,9	-6,2	-4,9
COOLING ONLY - maximum cooling capacity (GROSS VALUE)								
Cooling capacity	(1)	kW	326	521	648	737	1031	1044
EER	(1)	kW/kW	3,90	4,04	3,76	4,25	3,94	4,19
COOLING ONLY - maximum cooling capacity (EN14511 VALUE)								
Cooling capacity	(1)(2)	kW	324	516	643	730	1021	1035
EER	(1)(2)	kW/kW	3,75	3,85	3,62	4,05	3,76	4,01
ENERGY EFFICIENCY								
SEASONAL EFFICIENCY IN COOLING (Reg. EU 2016/2281)								
Ambient refrigeration								
Prated,c	(8)	kW	257	408	500	600	786	839
SEER	(8)(9)		4,48	4,27	4,33	4,76	4,38	4,42
Performance ηs	(8)(10)	%	176	168	170	187	172	174
EXCHANGERS								
HEAT EXCHANGER USER SIDE IN REFRIGERATION								
Water flow	(1)	l/s	14,75	23,54	28,97	33,66	45,95	47,89
Pressure drop	(1)	kPa	97,1	126	111	136	133	129
REFRIGERANT CIRCUIT								
Compressors nr.		N°	1	1	2	2	2	2
No. Circuits		N°	1	1	1	1	1	1
Refrigerant charge		kg	120	140	260	260	320	320
NOISE LEVEL								
Sound Pressure	(4)	dB(A)	56	61	62	58	63	63
Sound power level in cooling	(5)(6)	dB(A)	88	93	94	91	96	96
SIZE AND WEIGHT								
A	(7)	mm	4000	4000	4900	6400	7000	7900
B	(7)	mm	3060	3060	3060	3060	3060	3060
H	(7)	mm	2500	2500	2500	2500	2500	2500
Operating weight	(7)	kg	4450	4950	6510	7530	8210	8960

Notes:
1 Plant (side) cooling exchanger water (in/out) 15°C/10°C; Source (side) heat exchanger air (in) 30°C - 50% R.H.; Ethylene glycol 0%.
2 Values in compliance with EN14511-3:2013.
3 Plant (side) cooling exchanger water (in/out) 15°C/10°C; Ethylene glycol 0%.
4 Average sound pressure level at 10m distance, unit in a free field on a reflective surface; non-binding value calculated from the sound power level.
5 Sound power on the basis of measurements made in compliance with ISO 9614.
6 Sound power level in cooling, outdoors.
7 Unit in standard configuration/execution, without optional accessories.
8 Seasonal energy efficiency of the cooling environment [REGULATION (EU) N. 2016/2281]
9 Seasonal space heating energy index
10 Seasonal energy efficiency of the space cooling
The units highlighted in this publication contain HFC R134a [GWP_{100} 1430] fluorinated greenhouse gases.

TECS-EFC /NG /K			0903	0953	1003	1164	1204
Power supply		V/ph/Hz	400/3/50	400/3/50	400/3/50	400/3/50	400/3/50
PERFORMANCE							
COOLING ONLY (GROSS VALUE)							
Cooling capacity	(1)	kW	1210	1276	1448	1610	1682
EER	(1)	kW/kW	4,36	4,27	4,32	4,26	4,34
EER (evaporative system OFF)	(1)	kW/kW	3,74	3,38	3,37	3,50	3,61
COOLING ONLY (EN14511 VALUE)							
Cooling capacity	(1)(2)	kW	1202	1267	1436	1596	1666
EER	(1)(2)	kW/kW	4,20	4,12	4,14	4,07	4,12
EER (evaporative system OFF)	(1)(2)	kW/kW	3,62	3,28	3,25	3,36	3,46
FREE-COOLING TOTALE (GROSS VALUE)							
Cooling capacity	(3)	kW	1210	1276	1448	1610	1682
EER	(3)	kW/kW	31,03	30,02	29,92	26,31	27,48
Total free-cooling temperature	(3)	°C	-4,7	-6,1	-6,0	-5,1	-5,3
COOLING ONLY - maximum cooling capacity (GROSS VALUE)							
Cooling capacity	(1)	kW	1258	1364	1545	1698	1768
EER	(1)	kW/kW	4,21	3,93	3,98	4,02	4,12
COOLING ONLY - maximum cooling capacity (EN14511 VALUE)							
Cooling capacity	(1)(2)	kW	1249	1354	1531	1682	1750
EER	(1)(2)	kW/kW	4,05	3,79	3,80	3,83	3,91
ENERGY EFFICIENCY							
SEASONAL EFFICIENCY IN COOLING (Reg. EU 2016/2281)							
Ambient refrigeration							
Prated,c	(8)	kW	1032	1052	1192	1340	1414
SEER	(8)(9)		4,30	4,14	4,19	4,10	4,10
Performance ηs	(8)(10)	%	169	163	165	161	161
EXCHANGERS							
HEAT EXCHANGER USER SIDE IN REFRIGERATION							
Water flow	(1)	l/s	57,90	61,07	69,29	77,05	80,49
Pressure drop	(1)	kPa	112	108	138	153	168
REFRIGERANT CIRCUIT							
Compressors nr.		N°	3	3	3	4	4
No. Circuits		N°	2	2	2	2	2
Refrigerant charge		kg	430	520	520	540	540
NOISE LEVEL							
Sound Pressure	(4)	dB(A)	64	64	65	65	65
Sound power level in cooling	(5)(6)	dB(A)	97	97	98	98	98
SIZE AND WEIGHT							
A	(7)	mm	10600	11200	11200	13000	13600
B	(7)	mm	3060	3060	3060	3060	3060
H	(7)	mm	2500	2500	2500	2500	2500
Operating weight	(7)	kg	12620	13300	13620	15890	16010

Notes:
1 Plant (side) cooling exchanger water (in/out) 15°C/10°C; Source (side) heat exchanger air (in) 30°C - 50% R.H.; Ethylene glycol 0%.
2 Values in compliance with EN14511-3:2013.
3 Plant (side) cooling exchanger water (in/out) 15°C/10°C; Ethylene glycol 0%.
4 Average sound pressure level at 10m distance, unit in a free field on a reflective surface; non-binding value calculated from the sound power level.
5 Sound power on the basis of measurements made in compliance with ISO 9614.
6 Sound power level in cooling, outdoors.
7 Unit in standard configuration/execution, without optional accessories.
8 Seasonal energy efficiency of the cooling environment [REGULATION (EU) N. 2016/2281]
9 Seasonal space heating energy index
10 Seasonal energy efficiency of the space cooling
The units highlighted in this publication contain HFC R134a [GWP_{100} 1430] fluorinated greenhouse gases.

TECS-EFC /NG /CA			0211	0251	0351	0452	0552	0712	0803	0903	1003
Power supply		V/ph/Hz	400/3/50	400/3/50	400/3/50	400/3/50	400/3/50	400/3/50	400/3/50	400/3/50	400/3/50
PERFORMANCE											
COOLING ONLY (GROSS VALUE)											
Cooling capacity	(1)	kW	316	362	507	629	731	1012	1094	1237	1474
EER	(1)	kW/kW	4,25	4,44	4,47	4,24	4,53	4,47	4,51	4,51	4,42
EER (evaporative system OFF)	(1)	kW/kW	3,67	3,99	3,72	3,59	4,08	3,72	4,06	3,96	3,53
COOLING ONLY (EN14511 VALUE)											
Cooling capacity	(1)(2)	kW	314	359	502	624	724	1004	1088	1228	1461
EER	(1)(2)	kW/kW	4,09	4,24	4,26	4,06	4,30	4,27	4,37	4,33	4,22
EER (evaporative system OFF)	(1)(2)	kW/kW	3,54	3,83	3,57	3,47	3,89	3,58	3,94	3,82	3,39
FREE-COOLING TOTALE (GROSS VALUE)											
Cooling capacity	(3)	kW	316	362	507	629	731	1012	1094	1237	1474
EER	(3)	kW/kW	39,05	29,44	36,20	40,04	29,73	31,63	30,90	30,47	33,42
Total free-cooling temperature	(3)	°C	-3,7	-3,7	-4,5	-4,1	-3,2	-4,4	-3,3	-3,6	-5,1
COOLING ONLY - maximum cooling capacity (GROSS VALUE)											
Cooling capacity	(1)	kW	329	370	523	660	740	1045	1110	1260	1554
EER	(1)	kW/kW	4,08	4,37	4,33	4,02	4,49	4,32	4,46	4,44	4,15
COOLING ONLY - maximum cooling capacity (EN14511 VALUE)											
Cooling capacity	(1)(2)	kW	327	367	519	654	733	1036	1103	1251	1540
EER	(1)(2)	kW/kW	3,91	4,17	4,12	3,86	4,26	4,13	4,32	4,27	3,95
ENERGY EFFICIENCY											
SEASONAL EFFICIENCY IN COOLING (Reg. EU 2016/2281)											
Ambient refrigeration											
Prated,c	(8)	kW	268	316	428	528	644	856	963	1075	1225
SEER	(8)(9)		4,60	4,50	4,63	4,76	4,71	4,73	4,82	4,64	4,51
Performance ηs	(8)(10)	%	181	177	182	188	185	186	190	183	177
EXCHANGERS											
HEAT EXCHANGER USER SIDE IN REFRIGERATION											
Water flow	(1)	l/s	15,14	17,33	24,25	30,08	35,00	48,43	52,34	59,18	70,55
Pressure drop	(1)	kPa	102	119	130	119	147	132	91,8	116	144
REFRIGERANT CIRCUIT											
Compressors nr.		N°	1	1	1	2	2	2	3	3	3
No. Circuits		N°	1	1	1	1	1	1	2	2	2
Refrigerant charge		kg	120	120	140	260	280	320	430	430	520
NOISE LEVEL											
Sound Pressure	(4)	dB(A)	56	57	58	58	59	60	61	61	61
Sound power level in cooling	(5)(6)	dB(A)	88	89	90	91	92	93	94	94	94
SIZE AND WEIGHT											
A	(7)	mm	4000	4000	4900	6400	7900	10000	12100	13000	13000
B	(7)	mm	3060	3060	3060	3060	3060	3060	3060	3060	3060
H	(7)	mm	2500	2500	2500	2500	2500	2500	2500	2500	2500
Operating weight	(7)	kg	4730	4880	5670	7410	8810	11520	13700	14790	15220

Notes:
1 Plant (side) cooling exchanger water (in/out) 15°C/10°C; Source (side) heat exchanger air (in) 30°C - 50% R.H.; Ethylene glycol 0%.
2 Values in compliance with EN14511-3:2013.
3 Plant (side) cooling exchanger water (in/out) 15°C/10°C; Ethylene glycol 0%.
4 Average sound pressure level at 10m distance, unit in a free field on a reflective surface; non-binding value calculated from the sound power level.
5 Sound power on the basis of measurements made in compliance with ISO 9614.
6 Sound power level in cooling, outdoors.
7 Unit in standard configuration/execution, without optional accessories.
8 Seasonal energy efficiency of the cooling environment [REGULATION (EU) N. 2016/2281]
9 Seasonal space heating energy index
10 Seasonal energy efficiency of the space cooling
The units highlighted in this publication contain HFC R134a [GWP_{100} 1430] fluorinated greenhouse gases.

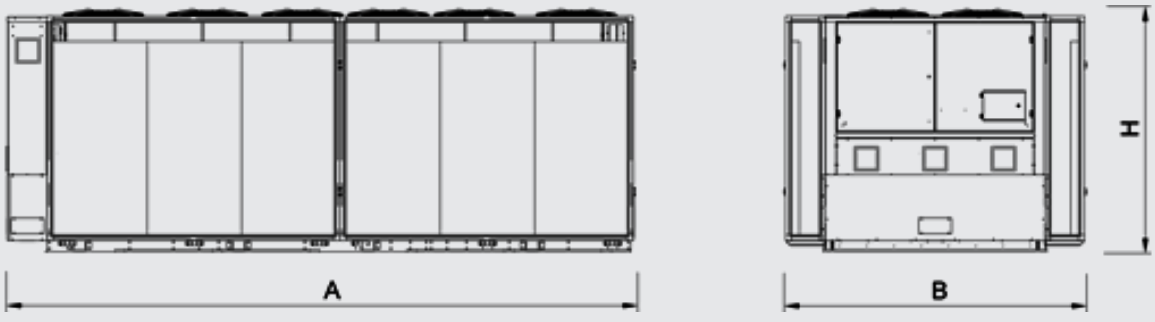

<<< BACK INDEX

AWR MTD2 XE 0011ms - 0091t
i-BX-N 004 - 013
i-KIR2-MTD 0011m - 0061m
i-KIR-MTD 0075t - 0151t
i-NRG 0061m - 0061t
AWR DHW2 XE 0021m - 0101ts
AWR-HT 0122 - 0302
AWR-HT 0404 - 0604
MICS-N FFT 0072 - 0182
NX-N 0152P - 0812P
NX-N 0604P - 1204P
NECS-N 0202T - 0612T
NX-N 0604T - 1204T
NECS-N 1314 - 3218
FOCS-N 2022 - 4822
MICS-CN 0072 - 0122
NX-CN 0072 - 1104
i-KI-MTD 0075t - 0151t
AW-HT 0122 - 0302
AW-HT 0404 - 0604
WWR MTD2 0011ms - 0121ts
WWR DHW2 0011ms - 0121t
NX-WN 0122 - 1204
WW-HT 0071 - 0302
EW-HT 0152 - 0612
WWH-HT 0071 - 0302
NX-W /H 0122 - 1204
FOCS-W /H 0401 - 1302
FOCS2-W /H 1301 - 9604
i-FX-W (1+i) /H 1402 - 4652
BWR MTD2 0011ms - 0121ts
BW-HT 0071 - 0302

HEAT PUMPS

HEAT PUMPS

AWR MTD2 XE 0011ms - 0091t

High efficiency reversible heat pump, air source for outdoor installation 5,20-29,2 kW



Heat pumps AWR-MTD2-XE reversible units are able to provide heating, cooling and domestic hot water. Particular attention was paid to the winter, thanks to special technological devices is guaranteed beyond the normal limits of traditional units. Prana AWR-MTD2-XE can be combined with traditional systems or radiant panels, ensuring a high energy efficiency. All units are certified in accordance with the Class A classification Eurovent energy in heating. This makes them particularly suitable for use radiant installations. The installation is greatly simplified through the integration of the hydraulic group simply by connecting the unit to water plant and electricity so that it can be put into operation.

Version

-	Basic
H	integrated electric heater

Features

Structure and base in hot-dip galvanised steel with epoxy powder paint finish.
High efficiency, low drop AISI 316 stainless steel plate exchangers (water side) complete with closed-cell insulation with vapour barrier,anti-freeze heating element and differential pressure switch
Hermetic scroll type compressors, equipped with the crankcase heater and thermal protection
Finned coils made with copper pipes and aluminium fins with large exchange surface area (100% fully quality tested)
Axial electric fans, external rotor, 6-pole electric motor fitted with thermal protection, housed in aerodynamic conveyor profile with safety grill
Low external air temperature device:
continuous fan speed regulation with pressure switch
Modulating electrical resistance to avoid freezing of the base; the resistance is located between wing and base exchanger to improve and facilitate the flow of water during defrosting
Condensate collecting tray (models 0011÷0051)
Coil protection grille
Soft starter for 230V/1/50Hz units (ms)
Phase sequence control relay for three phase models
The water circuit comes complete with:
- Variable flow circulator for all models
- Differential pressure switch.
- Expansion tank
- Safety valve
- Manual filling assembly
- Pressure gauge
- Air vent valve

The full range is also available with the Class A efficiency rating (in heating).

Accessory

- Wired room terminal with backlit display, and with temperature and umidity probe
- Extension module for system configuration
- Three-way valve for domestic hot water
- Electric heater of integration for the heating system
- Electric heater for hot water cylinder, of integration and for anti-legionellosis
- Cascade management kit
- Serial card RS485 for ModBus
- External buffer tank and hydronic connecting kit
- Buffer tank 35,100,200 liters
- Hot water cylinder 300,500 liters
- 300 liters thermal store for domestic hot water, for DOMH2O kit
- 300,500,1000 liters thermal store for domestic hot water with solar heat exchanger, for DOMH2O kit
- DOMH2O15 e DOMH2O24 kit for domestic hot water with external plate heat exchanger and pump

Controls

NADISYSTEM
Electronic control Nadisystem provides great application flexibility. The remote keyboard kit wired indoor and outdoor temperature sensors allow dynamic control of delivery temperature water, optimizing comfort in the room and increasing the energy efficiency.
The electronic board allows you to manage:
-Wired remote control, backlit display complete with remote temperature and humidity probe
-outdoor temperature sensor for water plant side modular set point compensation
-a zone of direct heating for radiator, floor heating or fan coil
-domestic hot water production by external three-way valve (accessory)
-Electrical heating element for possible integration and anti-legionella cycle for cylinder
-boiler or electric heater in substitution or in addition
-the room controller can customise up to six time bands. The presence of the programmable timer allows the creation of an operating profile containing up to 6 time bands.
-up to 4 heat pump in cascade (with N-CM component)
--several solutions through appropriate configurations of the controller and use of dedicated extension modules (accessorie), up to 5 zone.
The defrost adopts a proprietary self-adaptive logic, which features the monitoring of numerous operational parameters. This allows to reduce the number and duration of the defrost cycles, with a benefit for the overall energy efficiency.



APPLICATION HYDRONIC TERMINAL

AWR MTD2 XE			0011ms	0025ms	0031ms	0041ms	0031t	0041t	0051t	0061t	0091t
Power supply		V/ph/Hz	230/1/50	230/1/50	230/1/50	230/1/50	400/3/50	400/3/50	400/3/50	400/3/50	400/3/50
COOLING ONLY (GROSS VALUE)											
Cooling capacity	(1)	kW	5,20	6,30	9,20	11,7	8,60	11,9	13,2	15,2	22,1
Total power input	(1)	kW	1,70	2,20	3,10	4,00	3,00	4,00	4,60	5,00	7,20
EER	(1)	kW/kW	3,06	2,86	2,97	2,92	2,87	2,97	2,87	3,04	3,07
ESEER	(1)	kW/kW	3,62	3,63	3,52	3,46	3,42	3,65	3,24	3,55	3,57
COOLING ONLY (EN14511 VALUE)											
Cooling capacity	(1)(2)	kW	5,20	6,30	9,23	11,7	8,63	11,9	13,2	15,2	22,2
EER	(1)(2)	kW/kW	3,08	2,89	3,01	2,97	2,91	3,02	2,91	3,06	3,09
ESEER	(1)(2)	kW/kW	3,65	3,64	3,62	3,53	3,46	3,70	3,30	3,57	3,61
Cooling energy class			B	C	B	B	B	B	B	B	B
HEATING ONLY (GROSS VALUE)											
Total heating capacity	(3)	kW	6,10	7,30	10,8	13,6	10,6	13,8	15,4	17,5	24,6
Total power input	(3)	kW	1,90	2,30	3,30	4,10	3,20	4,30	4,60	5,20	7,40
COP	(3)	kW/kW	3,21	3,17	3,27	3,32	3,31	3,21	3,35	3,37	3,32
HEATING ONLY (EN14511 VALUE)											
Total heating capacity	(3)(2)	kW	6,10	7,30	10,8	13,6	10,6	13,8	15,4	17,5	24,5
COP	(3)(2)	kW/kW	3,23	3,20	3,30	3,35	3,34	3,24	3,38	3,38	3,33
Cooling energy class			A	A	A	A	A	A	A	A	A
ENERGY EFFICIENCY											
SEASONAL EFFICIENCY IN COOLING (Reg. EU 2016/2281)											
Ambient refrigeration											
Prated,c	(10)	kW	-	-	-	-	-	-	-	-	-
SEER	(10)(11)		-	-	-	-	-	-	-	-	-
Performance ηs	(10)(12)	%	-	-	-	-	-	-	-	-	-
SEASONAL EFFICIENCY IN HEATING (Reg. EU 813/2013)											
PDesign	(4)	kW	6,34	6,40	7,99	9,65	7,56	10,0	11,1	12,7	17,5
SCOP	(4)(13)		3,64	3,58	3,52	3,43	3,27	3,54	3,28	3,43	3,33
Performance ηs	(4)(14)	%	143	140	138	134	128	139	128	134	130
Seasonal efficiency class	(4)		A+	A+	A+	A+	A+	A+	A+	A+	A+
EXCHANGERS											
HEAT EXCHANGER USER SIDE IN REFRIGERATION											
Water flow	(1)	l/s	0,25	0,30	0,44	0,56	0,41	0,57	0,63	0,73	1,06
Available unit's head	(1)	kPa	54,3	51,2	92,2	81,1	95,4	79,9	78,1	53,8	101
HEAT EXCHANGER USER SIDE IN HEATING											
Water flow	(3)	l/s	0,29	0,35	0,52	0,66	0,51	0,67	0,74	0,84	1,19
Available unit's head	(3)	kPa	48,4	44,8	82,0	67,5	83,3	66,0	62,9	46,4	95,9
REFRIGERANT CIRCUIT											
Compressors nr.		N°	1	1	1	1	1	1	1	1	1
No. Circuits		N°	1	1	1	1	1	1	1	1	1
Refrigerant charge		kg	2,55	2,60	3,50	4,35	3,50	4,35	4,50	6,10	8,50
NOISE LEVEL											
Sound power level in cooling	(5)(6)	dB(A)	69	69	71	71	71	71	71	72	74
Sound power level in heating	(5)(7)	dB(A)	70	70	70	70	70	70	70	73	75
Sound Pressure	(8)	dB(A)	54	54	56	56	56	56	56	57	58
SIZE AND WEIGHT											
A	(9)	mm	900	900	900	900	900	900	900	1550	1550
B	(9)	mm	420	420	420	420	420	420	420	450	450
H	(9)	mm	1240	1240	1240	1390	1240	1390	1390	1200	1700
Operating weight	(9)	kg	145	150	155	170	155	170	180	250	335

Notes:
1 Plant (side) cooling exchanger water (in/out) 12°C/7°C; Source (side) heat exchanger air (in) 35°C.
2 Values in compliance with EN14511-3:2013.
3 Plant (side) heat exchanger water (in/out) 40°C/45°C; Source (side) heat exchanger air (in) 7°C - 87% R.H.
4 Seasonal space heating energy efficiency class LOW TEMPERATURE in AVERAGE climate conditions [REGULATION (EU) N. 813/2013]
5 Sound power on the basis of measurements made in compliance with ISO 9614.
6 Sound power level in cooling, outdoors.
7 Sound power level in heating, outdoors.
8 Average sound pressure level at 1m distance, unit in a free field on a reflective surface; non-binding value calculated from the sound power level.
9 Unit in standard configuration/execution, without optional accessories.
10 Seasonal energy efficiency of the cooling environment [REGULATION (EU) N. 2016/2281]
11 Seasonal space heating energy index
12 Seasonal energy efficiency of the space cooling
13 Seasonal performance coefficient
14 Seasonal space heating energy efficiency
The units highlighted in this publication contain HFC R410A [GWP_{100} 2088] fluorinated greenhouse gases.
Certified data in EUROVENT

APPLICATION FLOOR HEATING

AWR MTD2 XE			0011ms	0025ms	0031ms	0041ms	0031t	0041t	0051t	0061t	0091t
Power supply		V/ph/Hz	230/1/50	230/1/50	230/1/50	230/1/50	400/3/50	400/3/50	400/3/50	400/3/50	400/3/50
COOLING ONLY (GROSS VALUE)											
Cooling capacity	(1)	kW	7,20	8,30	12,3	15,7	11,7	15,8	17,7	20,2	29,2
Total power input	(1)	kW	1,90	2,20	3,30	4,10	3,10	4,20	4,70	5,30	7,80
EER	(1)	kW/kW	3,79	3,77	3,73	3,83	3,77	3,76	3,77	3,81	3,74
ESEER	(1)	kW/kW	3,62	3,63	3,52	3,46	3,42	3,65	3,24	3,55	3,57
COOLING ONLY (EN14511 VALUE)											
Cooling capacity	(1)(2)	kW	7,19	8,29	12,3	15,7	11,7	15,8	17,7	20,2	29,3
EER	(1)(2)	kW/kW	3,81	3,80	3,78	3,86	3,83	3,79	3,79	3,82	3,78
ESEER	(1)(2)	kW/kW	3,65	3,64	3,62	3,53	3,46	3,70	3,30	3,57	3,61
Cooling energy class			B	C	B	B	B	B	B	B	B
HEATING ONLY (GROSS VALUE)											
Total heating capacity	(3)	kW	6,30	7,40	11,2	14,0	10,9	14,0	15,9	17,9	25,1
Total power input	(3)	kW	1,50	1,80	2,60	3,30	2,60	3,30	3,80	4,20	6,00
COP	(3)	kW/kW	4,20	4,11	4,31	4,24	4,19	4,24	4,18	4,26	4,18
HEATING ONLY (EN14511 VALUE)											
Total heating capacity	(3)(2)	kW	6,30	7,40	11,2	14,0	10,9	14,0	15,9	17,9	25,0
COP	(3)(2)	kW/kW	4,24	4,16	4,36	4,29	4,25	4,29	4,23	4,29	4,20
Cooling energy class			A	A	A	A	A	A	A	A	A
ENERGY EFFICIENCY											
SEASONAL EFFICIENCY IN COOLING (Reg. EU 2016/2281)											
Ambient refrigeration											
Prated,c	(10)	kW	-	-	-	-	-	-	-	-	-
SEER	(10)(11)		-	-	-	-	-	-	-	-	-
Performance ηs	(10)(12)	%	-	-	-	-	-	-	-	-	-
SEASONAL EFFICIENCY IN HEATING (Reg. EU 813/2013)											
PDesign	(4)	kW	6,34	6,40	7,99	9,65	7,56	10,0	11,1	12,7	17,5
SCOP	(4)(13)		3,64	3,58	3,52	3,43	3,27	3,54	3,28	3,43	3,33
Performance ηs	(4)(14)	%	143	140	138	134	128	139	128	134	130
Seasonal efficiency class	(4)		A+	A+	A+	A+	A+	A+	A+	A+	A+
EXCHANGERS											
HEAT EXCHANGER USER SIDE IN REFRIGERATION											
Water flow	(1)	l/s	0,35	0,40	0,59	0,75	0,56	0,76	0,85	0,97	1,40
Available unit's head	(1)	kPa	40,8	38,1	72,0	51,8	76,4	50,9	46,4	37,3	85,4
HEAT EXCHANGER USER SIDE IN HEATING											
Water flow	(3)	l/s	0,30	0,36	0,54	0,67	0,52	0,67	0,76	0,86	1,21
Available unit's head	(3)	kPa	47,2	44,3	79,5	64,8	81,5	64,8	59,7	45,2	95,0
REFRIGERANT CIRCUIT											
Compressors nr.		N°	1	1	1	1	1	1	1	1	1
No. Circuits		N°	1	1	1	1	1	1	1	1	1
Refrigerant charge		kg	2,55	2,60	3,50	4,35	3,50	4,35	4,50	6,10	8,50
NOISE LEVEL											
Sound power level in cooling	(5)(6)	dB(A)	69	69	71	71	71	71	71	72	74
Sound power level in heating	(5)(7)	dB(A)	70	70	70	70	70	70	70	73	75
Sound Pressure	(8)	dB(A)	54	54	56	56	56	56	56	57	58
SIZE AND WEIGHT											
A	(9)	mm	900	900	900	900	900	900	900	1550	1550
B	(9)	mm	420	420	420	420	420	420	420	450	450
H	(9)	mm	1240	1240	1240	1390	1240	1390	1390	1200	1700
Operating weight	(9)	kg	145	150	155	170	155	170	180	250	335

Notes:
1 Plant (side) cooling exchanger water (in/out) 23°C/18°C; Source (side) heat exchanger air (in) 35°C.
2 Values in compliance with EN14511-3:2013.
3 Plant (side) heat exchanger water (in/out) 30°C/35°C; Source (side) heat exchanger air (in) 7°C - 87% R.H.
4 Seasonal space heating energy efficiency class LOW TEMPERATURE in AVERAGE climate conditions [REGULATION (EU) N. 813/2013]
5 Sound power on the basis of measurements made in compliance with ISO 9614.
6 Sound power level in cooling, outdoors.
7 Sound power level in heating, outdoors.
8 Average sound pressure level at 1m distance, unit in a free field on a reflective surface; non-binding value calculated from the sound power level.
9 Unit in standard configuration/execution, without optional accessories.
10 Seasonal energy efficiency of the cooling environment [REGULATION (EU) N. 2016/2281]
11 Seasonal space heating energy index
12 Seasonal energy efficiency of the space cooling
13 Seasonal performance coefficient
14 Seasonal space heating energy efficiency
The units highlighted in this publication contain HFC R410A [GWP_{100} 2088] fluorinated greenhouse gases.
Certified data in EUROVENT

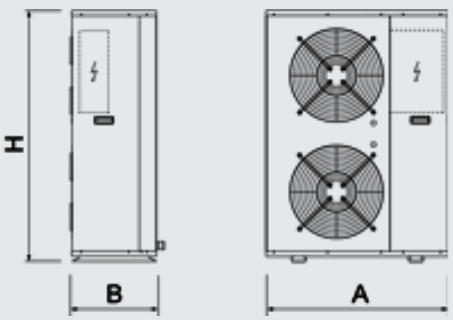

HEAT PUMPS

i-BX-N 004 - 013

Reversible heat pump, air source for outdoor installation 4,20-12,4 kW



Outdoor unit for the production of chilled/hot water with variable speed (Inverter Driven) Scroll compressors, optimized for R410A in a single-circuit configuration, axial-flow fans, condensing coil with copper tubes and aluminum fins, plate heat exchanger on water side and electronic expansion valve as standard equipment.
Flexible and reliable unit; it easily adapts itself to different thermal load conditions thanks to the precise temperature control together with the use of inverter technology. The high performance's level, both full and partial load, is achieved thanks to the accurate unit's design and to the use of variable speed (inverter) motor.
The i-BX-N heat pumps provide for heating, cooling and domestic hot water production. Particular care is taken for winter mode, that thanks to the Inverter technology is guaranteed beyond traditional units working limits.

Version

- Basic

Features

ErP READY
The highest level of efficiency at part load can meet and exceed the minimum seasonal efficiency for heating, SCOP according with the eco-sustainable design requirements for all products using energy.
SYSTEM EFFICIENCY
The unit is designed as a system: all components are regulated using proprietary control's logic for the highest efficiency.
HIGH EFFICIENCY AT PARTIAL LOAD
High seasonal efficiency in both heating and cooling mode, using DC inverter technology to modulate compressor operation and deliver the exact amount of energy based on the actual needs of the building. High efficiency for low energy consumption during the operating hours.
HIGH EFFICIENCY COMPONENTS
In terms of improving performance and reducing power consumption, the electronic thermostatic valve is an important component that maximises system efficiency, same for the choise the hydronic kit with inverter water pump and the modulating the fans speed as standard equipments.
EXTENSIVE OPERATING LIMITS
Particular care is taken for winter mode, that thanks to inverter technology is guaranteed beyond traditional units working limits, supplying hot water up to 60°C and down to -20°external air.
INTEGRATED HYDRONIC MODULE
The integrated hydronic include all the water circuit components (anti-freeze electrical heater on plate heat exchanger, air vents, flow switch, water filter, safety valve, EC water pumps, expansion tank) so as to optimize installation space, times and costs.

Accessory

- Remote keyboard
- Wired room terminal with backlit display, and with temperature and umidity probe
- Cascade management kit
- DHW temperature probe and Buffer temperature probe
- Copper-Aluminum heat exchanger coils with epoxy treatment
- Copper-Copper heat exchanger coils
- Buffer tank
- Domestic hot water storage tank
- Electric heater for the base and for condensate collecting tray to avoid freezing
- Serial card RS485 for ModBus
- Rubber anti-vibration mounting kit

Controls

NADISYSTEM
The keypad features function controls and a complete LCD display for viewing data and activating the unit, via a multilevel menu. The remote keyboard kit wired indoor and outdoor temperature sensors allow dynamic control of delivery temperature water, optimizing comfort in the room and increasing the energy efficiency.
The electronic board allows you to manage:
-Wired remote keypad, backlit display complete with remote temperature
-outdoor air temperature sensor on board for climatic curve
-one zone with mixing valve for floor heating and one zone of direct heating for radiator, floor heating or fan coil
-domestic hot water production by external three-way valve (accessory)
-electric heater for possible integration and anti-legionella cycle for DHW tank
-gas boiler or electric heater in substitution or in addition for space heating
- the built-in clock can be used to create an operating profile containing time bands for space heating/cooling and for DHW
-night mode to limit the noise level of the units. Noise level is reduced limiting the maximum speed of the compressor and fans.
-up to 4 heat pump in cascade (with the accessories N-CM)
The defrost adopts a proprietary self-adaptive logic, which features the monitoring of numerous operational parameters. This allows to reduce the number and duration of the defrost cycles, with a benefit for the overall energy efficiency.



i-BX-N			004	006	008	010	013
Power supply		V/ph/Hz	230/1/50	230/1/50	230/1/50	230/1/50	230/1/50
PERFORMANCE							
COOLING ONLY (GROSS VALUE)							
Cooling capacity	(1)	kW	4,20	5,90	7,50	9,90	12,4
Total power input	(1)	kW	1,55	2,08	2,72	3,64	4,54
EER	(1)	kW/kW	2,71	2,84	2,76	2,72	2,73
ESEER	(1)	kW/kW	4,24	4,32	4,45	4,21	4,24
COOLING ONLY (EN14511 VALUE)							
Cooling capacity	(1)(2)	kW	4,20	5,90	7,51	9,91	12,4
EER	(1)(2)	kW/kW	2,76	2,88	2,81	2,73	2,75
ESEER	(1)(2)	kW/kW	4,61	4,56	4,83	4,26	4,37
Cooling energy class			C	C	C	C	C
HEATING ONLY (GROSS VALUE)							
Total heating capacity	(3)	kW	4,63	6,36	8,51	11,0	14,3
Total power input	(3)	kW	1,51	2,03	2,65	3,65	4,53
COP	(3)	kW/kW	3,07	3,13	3,21	3,01	3,16
HEATING ONLY (EN14511 VALUE)							
Total heating capacity	(3)(2)	kW	4,62	6,37	8,50	11,0	14,3
COP	(3)(2)	kW/kW	3,12	3,19	3,26	3,02	3,19
Cooling energy class			B	B	A	B	B
ENERGY EFFICIENCY							
SEASONAL EFFICIENCY IN COOLING (Reg. EU 2016/2281)							
Ambient refrigeration							
Prated,c	(10)	kW	-	-	-	-	-
SEER	(10)(11)		-	-	-	-	-
Performance ηs	(10)(12)	%	-	-	-	-	-
SEASONAL EFFICIENCY IN HEATING (Reg. EU 813/2013)							
PDesign	(4)	kW	3,40	4,80	6,02	8,18	10,4
SCOP	(4)(13)		3,58	3,89	4,15	3,54	3,81
Performance ηs	(4)(14)	%	140	153	163	139	149
Seasonal efficiency class	(4)		A+	A++	A++	A+	A+
EXCHANGERS							
HEAT EXCHANGER USER SIDE IN REFRIGERATION							
Water flow	(1)	l/s	0,20	0,28	0,36	0,47	0,59
Pressure drop	(1)	kPa	8,10	13,9	12,5	13,9	15,0
HEAT EXCHANGER USER SIDE IN HEATING							
Water flow	(3)	l/s	0,22	0,31	0,41	0,53	0,69
Pressure drop	(3)	kPa	10,0	16,5	16,4	17,5	20,5
REFRIGERANT CIRCUIT							
Compressors nr.		N°	1	1	1	1	1
No. Circuits		N°	1	1	1	1	1
Refrigerant charge		kg	1,44	2,19	3,70	3,97	4,47
NOISE LEVEL							
Sound Pressure	(5)	dB(A)	50	51	51	54	55
Sound power level in cooling	(6)(7)	dB(A)	64	65	66	69	70
Sound power level in heating	(6)(8)	dB(A)	64	65	66	69	70
SIZE AND WEIGHT							
Operating weight	(9)	kg	80	85	100	115	135
A	(9)	mm	900	900	900	900	900
B	(9)	mm	370	370	420	420	420
H	(9)	mm	940	940	1240	1240	1390

Notes:
1 Plant (side) cooling exchanger water (in/out) 12°C/7°C; Source (side) heat exchanger air (in) 35°C.
2 Values in compliance with EN14511-3:2013.
3 Plant (side) heat exchanger water (in/out) 40°C/45°C; Source (side) heat exchanger air (in) 7°C - 87% R.H.
4 Seasonal space heating energy efficiency class LOW TEMPERATURE in AVERAGE climate conditions [REGULATION (EU) N. 813/2013]
5 Average sound pressure level at 1m distance, unit in a free field on a reflective surface; non-binding value calculated from the sound power level.
6 Sound power on the basis of measurements made in compliance with ISO 9614.
7 Sound power level in cooling, outdoors.
8 Sound power level in heating, outdoors.
9 Unit in standard configuration/execution, without optional accessories.
10 Seasonal energy efficiency of the cooling environment [REGULATION (EU) N. 2016/2281]
11 Seasonal space heating energy index
12 Seasonal energy efficiency of the space cooling
13 Seasonal performance coefficient
14 Seasonal space heating energy efficiency
The units highlighted in this publication contain HFC R410A [GWP_{100} 2088] fluorinated greenhouse gases.
Certified data in EUROVENT

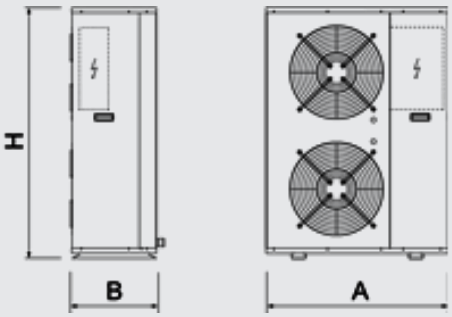

HEAT PUMPS

i-KIR2-MTD 0011m - 0061m

Air cooled reversible heat pump, with axial fans and inverter driven compressor, for heating water up to 60°C.
4,03-12,5 kW



The Climaveneta system is based on an packaged external units with integrated hydronic module and by an internal unit with the electronic regulation. The i-KIR2 heat pumps provide for heating, cooling and domestic hot water production. Particular care is taken for winter mode, that thanks to the Inverter technology is guaranteed beyond traditional units working limits, water production up to 60°C.
The i-KIR2 reverse-cycle heat pumps feature high seasonal efficiency in both heating and cooling mode, using DC inverter technology to modulate compressor operation and deliver the exact amount of energy based on the actual needs of the building.
This excellent result has been achieved by carefully sizing all the components. Special attention has been paid to all heat exchange surfaces and the fans. The use of newly designed condensing coils, with larger surfaces and special layout, new asymmetrical evaporators with better and more efficient refrigerant distribution, both in the liquid and gas phase, and high efficiency fans with DC motor are some of the important innovations included with this product.
i-KIR2 units can be coupled with traditional systems or radiant panels, guaranteeing always very high energy efficiency. Installation is strongly simplified thanks to the integrated hydronic module with inverter pump.

Version

- Basic

Features

SYSTEM EFFICIENCY
The unit is designed as a system: all components are regulated using proprietary control's logic for the highest efficiency.
HIGH EFFICIENCY AT PARTIAL LOAD
High seasonal efficiency in both heating and cooling mode, using DC inverter technology to modulate compressor operation and deliver the exact amount of energy based on the actual needs of the building. High efficiency for low energy consumption during the operating hours.
HIGH EFFICIENCY COMPONENTS
In terms of improving performance and reducing power consumption, the electronic thermostatic valve is an important component that maximises system efficiency, same for the choise the hydronic kit with inverter water pump and the modulating the fans speed with DC motor as standard equipments.
EXTENSIVE OPERATING LIMITS
Particular care is taken for winter mode, that thanks to inverter technology is guaranteed beyond traditional units working limits, supplying hot water up to 60°C and down to -20°external air.
INTEGRATED HYDRONIC MODULE
The integrated hydronic include all the water circuit components so as to optimize installation space, times and costs.

Accessory

- Wired remote keyboard with backlit display, and with temperature probe (it is a mandatory accessory)
- Outside air temperature probe for plant water set point compensation.
- DHW temperature probe and Buffer temperature probe
- i-EMR2 Internal module kit can be used for cascade configuration or for management up to 5 secondary circuits.
- Extension module for system configuration (only in combination with i-EMR2)
- Cascade management kit (only in combination with i-EMR2)
- Three-way valve for domestic hot water
- Electric heater of integration for the heating system
- Electric heater for hot water cylinder, of integration and for anti-legionellosis
- Serial card RS485 for ModBus
- Buffer tank 35,100,200 liters
- Hot water cylinder 300,500 liters
- 300 liters thermal store for domestic hot water, for DOMH2O kit
- 300,500,1000 liters thermal store for domestic hot water with solar heat exchanger, for DOMH2O kit
- DOMH2O15 e DOMH2O24 kit for domestic hot water with external plate heat exchanger and pump

Controls

NADISYSTEM LT
Electronic control provides great application flexibility. The remote keyboard kit wired indoor and outdoor temperature sensors allow dynamic control of delivery temperature water, optimizing comfort in the room and increasing the energy efficiency.
The electronic board allows you to manage:
-Wired remote keypad, backlit display complete with remote temperature
-outdoor air temperature sensor on board for climatic curve
-one zone with mixing valve for floor heating and one zone of direct heating for radiator, floor heating or fan coil
-domestic hot water production by external three-way valve (accessory)
-electric heater for possible integration and anti-legionella cycle for DHW tank
-gas boiler or electric heater in substitution or in addition for space heating
- the built-in clock can be used to create an operating profile containing time bands for space heating/cooling and for DHW
-up to 4 heat pump in cascade (with the accessories N-CM and one internal module i-EMR2 each units)
The defrost adopts a proprietary self-adaptive logic, which features the monitoring of numerous operational parameters. This allows to reduce the number and duration of the defrost cycles, with a benefit for the overall energy efficiency.



APPLICATION HYDRONIC TERMINAL

i-KIR2-MTD			0011m	0031m	0061m
Power supply		V/ph/Hz	230/1/50	230/1/50	230/1/50
COOLING ONLY (GROSS VALUE)					
Cooling capacity	(1)	kW	4,03	6,50	12,5
Total power input	(1)	kW	1,45	3,04	4,22
EER	(1)	kW/kW	2,78	2,14	2,96
ESEER	(1)	kW/kW			
COOLING ONLY (EN14511 VALUE)					
Cooling capacity	(1)(2)	kW	4,05	6,54	12,5
EER	(1)(2)	kW/kW	2,79	2,18	3,02
ESEER	(1)(2)	kW/kW	4,00	4,17	3,90
Cooling energy class			C	C	A
HEATING ONLY (GROSS VALUE)					
Total heating capacity	(3)	kW	5,32	9,40	15,3
Total power input	(3)	kW	1,75	2,95	5,37
COP	(3)	kW/kW	3,04	3,19	2,85
HEATING ONLY (EN14511 VALUE)					
Total heating capacity	(3)(2)	kW	5,31	9,37	15,2
COP	(3)(2)	kW/kW	3,05	3,23	2,87
Cooling energy class			B	A	A
ENERGY EFFICIENCY					
SEASONAL EFFICIENCY IN COOLING (Reg. EU 2016/2281)					
Ambient refrigeration					
Prated,c	(10)	kW	-	-	-
SEER	(10)(11)		-	-	-
Performance ηs	(10)(12)	%	-	-	-
SEASONAL EFFICIENCY IN HEATING (Reg. EU 813/2013)					
PDesign	(4)	kW	3,92	7,15	11,7
SCOP	(4)(13)		4,01	4,14	3,77
Performance ηs	(4)(14)	%	157	162	148
Seasonal efficiency class	(4)		A++	A++	A+
EXCHANGERS					
HEAT EXCHANGER USER SIDE IN REFRIGERATION					
Water flow	(1)	l/s	0,19	0,31	0,60
Available unit's head	(1)	kPa	148	137	91,4
HEAT EXCHANGER USER SIDE IN HEATING					
Water flow	(3)	l/s	0,26	0,45	0,74
Available unit's head	(3)	kPa	123	102	66,2
REFRIGERANT CIRCUIT					
Compressors nr.		N°	1	1	1
No. Circuits		N°	1	1	1
Refrigerant charge		kg	1,05	1,70	2,99
NOISE LEVEL					
Sound power level in cooling	(5)(6)	dB(A)	60	64	65
Sound power level in heating	(5)(7)	dB(A)	61	65	66
Sound Pressure	(8)	dB(A)	46	50	50
SIZE AND WEIGHT					
A	(9)	mm	825	850	1000
B	(9)	mm	300	330	330
H	(9)	mm	675	882	1418
Operating weight	(9)	kg	52	74	119

Notes:
1 Plant (side) cooling exchanger water (in/out) 12°C/7°C; Source (side) heat exchanger air (in) 35°C.
2 Values in compliance with EN14511-3:2013.
3 Plant (side) heat exchanger water (in/out) 40°C/45°C; Source (side) heat exchanger air (in) 7°C - 87% R.H.
4 Seasonal space heating energy efficiency class LOW TEMPERATURE in AVERAGE climate conditions [REGULATION (EU) N. 813/2013]
5 Sound power on the basis of measurements made in compliance with ISO 9614.
6 Sound power level in cooling, outdoors.
7 Sound power level in heating, outdoors.
8 Average sound pressure level at 1m distance, unit in a free field on a reflective surface; non-binding value calculated from the sound power level.
9 Unit in standard configuration/execution, without optional accessories.
10 Seasonal energy efficiency of the cooling environment [REGULATION (EU) N. 2016/2281]
11 Seasonal space heating energy index
12 Seasonal energy efficiency of the space cooling
13 Seasonal performance coefficient
14 Seasonal space heating energy efficiency
The units highlighted in this publication contain HFC R410A [GWP_{100} 2088] fluorinated greenhouse gases.
Certified data in EUROVENT

APPLICATION FLOOR HEATING

i-KIR2-MTD			0011m	0031m
Power supply		V/ph/Hz	230/1/50	230/1/50
COOLING ONLY (GROSS VALUE)				
Cooling capacity	(1)	kW	5,12	8,65
Total power input	(1)	kW	1,39	2,86
EER	(1)	kW/kW	3,68	3,02
ESEER	(1)	kW/kW		
COOLING ONLY (EN14511 VALUE)				
Cooling capacity	(1)(2)	kW	5,14	8,68
EER	(1)(2)	kW/kW	3,71	3,09
ESEER	(1)(2)	kW/kW	4,00	4,17
Cooling energy class			C	C
HEATING ONLY (GROSS VALUE)				
Total heating capacity	(3)	kW	5,87	9,74
Total power input	(3)	kW	1,46	2,48
COP	(3)	kW/kW	4,02	3,93
HEATING ONLY (EN14511 VALUE)				
Total heating capacity	(3)(2)	kW	5,86	9,72
COP	(3)(2)	kW/kW	4,03	4,00
Cooling energy class			B	A
ENERGY EFFICIENCY				
SEASONAL EFFICIENCY IN COOLING (Reg. EU 2016/2281)				
Ambient refrigeration				
Prated,c	(10)	kW	-	-
SEER	(10)(11)		-	-
Performance ηs	(10)(12)	%	-	-
SEASONAL EFFICIENCY IN HEATING (Reg. EU 813/2013)				
PDesign	(4)	kW	3,92	7,15
SCOP	(4)(13)		4,01	4,14
Performance ηs	(4)(14)	%	157	162
Seasonal efficiency class	(4)		A++	A++
EXCHANGERS				
HEAT EXCHANGER USER SIDE IN REFRIGERATION				
Water flow	(1)	l/s	0,25	0,41
Available unit's head	(1)	kPa	128	112
HEAT EXCHANGER USER SIDE IN HEATING				
Water flow	(3)	l/s	0,28	0,47
Available unit's head	(3)	kPa	112	98,4
REFRIGERANT CIRCUIT				
Compressors nr.		N°	1	1
No. Circuits		N°	1	1
Refrigerant charge		kg	1,05	1,70
NOISE LEVEL				
Sound power level in cooling	(5)(6)	dB(A)	60	64
Sound power level in heating	(5)(7)	dB(A)	61	65
Sound Pressure	(8)	dB(A)	46	50
SIZE AND WEIGHT				
A	(9)	mm	825	850
B	(9)	mm	300	330
H	(9)	mm	675	882
Operating weight	(9)	kg	52	74

Notes:
1 Plant (side) cooling exchanger water (in/out) 23°C/18°C; Source (side) heat exchanger air (in) 35°C.
2 Values in compliance with EN14511-3:2013.
3 Plant (side) heat exchanger water (in/out) 30°C/35°C; Source (side) heat exchanger air (in) 7°C - 87% R.H.
4 Seasonal space heating energy efficiency class LOW TEMPERATURE in AVERAGE climate conditions [REGULATION (EU) N. 813/2013]
5 Sound power on the basis of measurements made in compliance with ISO 9614.
6 Sound power level in cooling, outdoors.
7 Sound power level in heating, outdoors.
8 Average sound pressure level at 1m distance, unit in a free field on a reflective surface; non-binding value calculated from the sound power level.
9 Unit in standard configuration/execution, without optional accessories.
10 Seasonal energy efficiency of the cooling environment [REGULATION (EU) N. 2016/2281]
11 Seasonal space heating energy index
12 Seasonal energy efficiency of the space cooling
13 Seasonal performance coefficient
14 Seasonal space heating energy efficiency
The units highlighted in this publication contain HFC R410A [GWP_{100} 2088] fluorinated greenhouse gases.
Certified data in EUROVENT

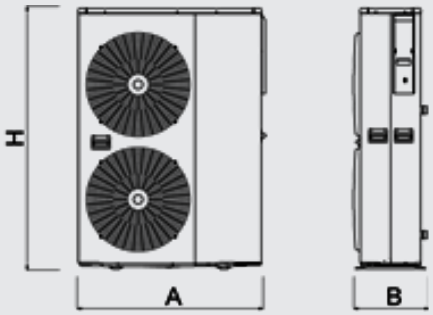

HEAT PUMPS

i-KIR-MTD 0075t - 0151t

Air cooled reversible heat pump, with axial fans and inverter driven compressor, for heating water up to 60°C.
15,6-30,5 kW



The Climaveneta system is based on an packaged external units with integrated hydronic module and by an internal unit with the electronic regulation. The i-KIR heat pumps provide for heating, cooling and domestic hot water production. Particular care is taken for winter mode, that thanks to the Inverter technology is guaranteed beyond traditional units working limits, water production up to 60°C.
The i-KIR reverse-cycle heat pumps feature high seasonal efficiency in both heating and cooling mode, using DC inverter technology to modulate compressor operation and deliver the exact amount of energy based on the actual needs of the building.
This excellent result has been achieved by carefully sizing all the components. Special attention has been paid to all heat
exchange surfaces and the fans. The use of newly designed condensing coils, with larger surfaces and special layout, new asymmetrical evaporators with better and more efficient refrigerant distribution, both in the liquid and gas phase, and high efficiency fans are some of the important innovations included with this product.
i-KIR units can be coupled with traditional systems or radiant panels, guaranteeing always very high energy efficiency. Intallation is strongly simplified thanks to the integrated hydronic module (optional).

Version

B Basic

Features

WIDE RANGE
Extended capacity range.
SYSTEM EFFICIENCY
The unit is designed as a system: all components are regulated using proprietary control's logic for the highest efficiency.
HIGH EFFICIENCY AT PARTIAL LOAD
High seasonal efficiency in both heating and cooling mode, using DC inverter technology to modulate compressor operation and deliver the exact amount of energy based on the actual needs of the building. High efficiency for low energy consumption during the operating hours.
HIGH EFFICIENCY COMPONENTS
In terms of improving performance and reducing power consumption, the electronic thermostatic valve is an important component that maximises system efficiency, same for the choise the hydronic kit with inverter water pump (optional) and the modulating the fans speed.
EXTENSIVE OPERATING LIMITS
Particular care is taken for winter mode, that thanks to inverter technology is guaranteed beyond traditional units working limits, supplying hot water up to 60°C and down to -20°external air.

Accessory

- Integrated hydronic module with on/off pump or high efficiency inverter pump
- Wired room terminal with backlit display, and with temperature and umidity probe
- Extension module for system configuration
- Three-way valve for domestic hot water
- Electric heater of integration for the heating system
- Electric heater for hot water cylinder, of integration and for anti-legionellosis
- Cascade management kit
- Serial card RS485 for ModBus
- Hot water cylinder 300,500 liters
- 300 liters thermal store for domestic hot water, for DOMH2O kit
- 300,500,1000 liters thermal store for domestic hot water with solar heat exchanger, for DOMH2O kit
- DOMH2O15 e DOMH2O24 kit for domestic hot water with external plate heat exchanger and pump
- Copper-Copper heat exchanger coils
- Copper-Aluminum heat exchanger coils with epoxy treatment
- Electric heater for the base and for condensate collecting tray to avoid freezing

Controls

NADISYSTEM
Electronic control Nadisystem provides great application flexibility. The remote keyboard kit wired and outdoor air temperature sensors allow dynamic control of delivery temperature water, optimizing comfort in the room and increasing the energy efficiency. The electronic board allows you to manage:
-Wired remote control, backlit display and with remote temperature and humidity probe
-outdoor temperature sensor for water plant side modular set point compensation
-a zone of direct heating for radiator, floor heating or fan coil
-a zone with mix valve for floor heating
-Electrical heating element for possible integration and anti-legionella cycle for cylinder
-boiler or electric heater in substitution or in addition
-the room controller can customise up to six time bands. The presence of the programmable timer allows the creation of an operating profile containing up to 6 time bands
-up to 4 heat pump in cascade (with N-CM component)
-several solutions through appropriate configurations of the controller and use of dedicated extension modules (accessorie), up to 5 zone



APPLICATION HYDRONIC TERMINAL

i-KIR-MTD			0075t	0091t	0095t	0101t	0121t	0135t	0151t
Power supply		V/ph/Hz	400/3/50	400/3/50	400/3/50	400/3/50	400/3/50	400/3/50	400/3/50
COOLING ONLY (GROSS VALUE)									
Cooling capacity	(1)	kW	15,6	19,3	22,1	24,0	26,4	28,7	30,5
Total power input	(1)	kW	6,54	6,93	8,84	10,2	10,1	12,5	12,6
EER	(1)	kW/kW	2,39	2,78	2,50	2,35	2,61	2,30	2,42
ESEER	(1)	kW/kW	4,30	4,44	4,37	4,28	4,69	4,65	4,65
COOLING ONLY (EN14511 VALUE)									
Cooling capacity	(1)(2)	kW	15,5	19,2	22,0	23,9	26,3	28,6	30,4
EER	(1)(2)	kW/kW	2,35	2,75	2,46	2,32	2,59	2,27	2,39
ESEER	(1)(2)	kW/kW	4,08	4,25	4,14	4,04	4,52	4,45	4,45
Cooling energy class			E	C	E	E	D	F	E
HEATING ONLY (GROSS VALUE)									
Total heating capacity	(3)	kW	21,6	30,4	32,9	35,6	35,8	39,2	44,4
Total power input	(3)	kW	8,30	9,45	10,9	12,3	11,4	13,0	14,7
COP	(3)	kW/kW	2,60	3,22	3,02	2,89	3,14	3,02	3,02
HEATING ONLY (EN14511 VALUE)									
Total heating capacity	(3)(2)	kW	21,7	30,6	33,1	35,9	36,0	39,4	44,6
COP	(3)(2)	kW/kW	2,57	3,18	2,98	2,86	3,11	2,99	2,99
Cooling energy class			D	A	B	C	A	A	A
ENERGY EFFICIENCY									
SEASONAL EFFICIENCY IN COOLING (Reg. EU 2016/2281)									
Ambient refrigeration									
Prated,c	(11)	kW	-	-	-	-	-	-	-
SEER	(11)(12)		-	-	-	-	-	-	-
Performance ηs	(11)(13)	%	-	-	-	-	-	-	-
SEASONAL EFFICIENCY IN HEATING (Reg. EU 813/2013)									
PDesign	(4)	kW	15,9	23,1	25,3	27,5	25,9	28,5	32,5
SCOP	(4)(14)		3,61	4,14	4,08	4,00	4,17	4,16	4,36
Performance ηs	(4)(15)	%	141	163	160	157	164	163	171
Seasonal efficiency class	(4)		A+	A++	A++	A++	A++	A++	A++
PDesign	(5)	kW	16,7	22,8	25,0	27,4	26,0	28,9	32,9
SCOP	(5)(14)		2,88	3,29	3,28	3,24	3,32	3,33	3,43
Performance ηs	(5)(15)	%	112	129	128	127	130	130	134
Seasonal efficiency class	(5)		A+	A++	A++	A++	A++	A++	A++
EXCHANGERS									
HEAT EXCHANGER USER SIDE IN REFRIGERATION									
Water flow	(1)	l/s	0,75	0,93	1,06	1,15	1,26	1,37	1,46
Pressure drop	(1)	kPa	13,3	12,2	16,0	18,7	10,4	12,2	13,7
HEAT EXCHANGER USER SIDE IN HEATING									
Water flow	(3)	l/s	1,04	1,47	1,59	1,72	1,73	1,89	2,14
Pressure drop	(3)	kPa	26,1	30,6	35,9	42,2	19,4	23,2	29,7
REFRIGERANT CIRCUIT									
Compressors nr.		N°	1	1	1	1	1	1	1
No. Circuits		N°	1	1	1	1	1	1	1
Refrigerant charge		kg	5,90	9,30	9,30	9,30	10,8	10,8	10,8
NOISE LEVEL									
Sound power level in cooling	(6)(7)	dB(A)	71	72	74	75	76	77	77
Sound power level in heating	(6)(8)	dB(A)	72	73	75	76	77	78	78
Sound Pressure	(9)	dB(A)	55	56	58	59	60	61	61
SIZE AND WEIGHT									
A	(10)	mm	1470	1470	1470	1470	1720	1720	1720
B	(10)	mm	570	570	570	570	670	670	670
H	(10)	mm	1200	1700	1700	1700	1700	1700	1700
Operating weight	(10)	kg	220	285	285	285	330	330	330

Notes:
1 Plant (side) cooling exchanger water (in/out) 12°C/7°C; Source (side) heat exchanger air (in) 35°C.
2 Values in compliance with EN14511-3:2013.
3 Plant (side) heat exchanger water (in/out) 40°C/45°C; Source (side) heat exchanger air (in) 7°C - 87% R.H.
4 Seasonal space heating energy efficiency class LOW TEMPERATURE in AVERAGE climate conditions [REGULATION (EU) N. 813/2013]
5 Seasonal space heating energy efficiency class MEDIA TEMPERATURE in AVERAGE climate conditions [REGULATION (EU) N. 813/2013]
6 Sound power on the basis of measurements made in compliance with ISO 9614.
7 Sound power level in cooling, outdoors.
8 Sound power level in heating, outdoors.
9 Average sound pressure level at 1m distance, unit in a free field on a reflective surface; non-binding value calculated from the sound power level.
10 Unit in standard configuration/execution, without optional accessories.
11 Seasonal energy efficiency of the cooling environment [REGULATION (EU) N. 2016/2281]
12 Seasonal space heating energy index
13 Seasonal energy efficiency of the space cooling
14 Seasonal performance coefficient
15 Seasonal space heating energy efficiency
The units highlighted in this publication contain HFC R410A [GWP_{100} 2088] fluorinated greenhouse gases.
Certified data in EUROVENT

APPLICATION FLOOR HEATING

i-KIR-MTD			0075t	0091t	0095t	0101t	0121t	0135t	0151t
Power supply		V/ph/Hz	400/3/50	400/3/50	400/3/50	400/3/50	400/3/50	400/3/50	400/3/50
COOLING ONLY (GROSS VALUE)									
Cooling capacity	(1)	kW	20,8	26,3	29,9	32,1	35,4	38,1	40,5
Total power input	(1)	kW	6,91	7,21	9,30	10,9	10,6	13,3	13,4
EER	(1)	kW/kW	3,01	3,65	3,22	2,94	3,34	2,86	3,02
ESEER	(1)	kW/kW	4,30	4,44	4,37	4,28	4,69	4,65	4,65
COOLING ONLY (EN14511 VALUE)									
Cooling capacity	(1)(2)	kW	20,7	26,2	29,7	31,9	35,3	37,9	40,3
EER	(1)(2)	kW/kW	2,94	3,56	3,14	2,87	3,28	2,82	2,97
ESEER	(1)(2)	kW/kW	4,08	4,25	4,14	4,04	4,52	4,45	4,45
Cooling energy class			E	C	E	E	D	F	E
HEATING ONLY (GROSS VALUE)									
Total heating capacity	(3)	kW	21,7	30,9	33,3	36,0	36,8	40,1	45,4
Total power input	(3)	kW	6,83	7,87	9,07	10,2	9,36	10,7	12,1
COP	(3)	kW/kW	3,18	3,93	3,67	3,53	3,93	3,75	3,75
HEATING ONLY (EN14511 VALUE)									
Total heating capacity	(3)(2)	kW	21,8	31,1	33,5	36,3	37,0	40,3	45,6
COP	(3)(2)	kW/kW	3,13	3,85	3,61	3,47	3,89	3,70	3,70
Cooling energy class			D	A	B	C	A	A	A
ENERGY EFFICIENCY									
SEASONAL EFFICIENCY IN COOLING (Reg. EU 2016/2281)									
Ambient refrigeration									
Prated,c	(11)	kW	-	-	-	-	-	-	-
SEER	(11)(12)		-	-	-	-	-	-	-
Performance ηs	(11)(13)	%	-	-	-	-	-	-	-
SEASONAL EFFICIENCY IN HEATING (Reg. EU 813/2013)									
PDesign	(4)	kW	15,9	23,1	25,3	27,5	25,9	28,5	32,5
SCOP	(4)(14)		3,61	4,14	4,08	4,00	4,17	4,16	4,36
Performance ηs	(4)(15)	%	141	163	160	157	164	163	171
Seasonal efficiency class	(4)		A+	A++	A++	A++	A++	A++	A++
PDesign	(5)	kW	16,7	22,8	25,0	27,4	26,0	28,9	32,9
SCOP	(5)(14)		2,88	3,29	3,28	3,24	3,32	3,33	3,43
Performance ηs	(5)(15)	%	112	129	128	127	130	130	134
Seasonal efficiency class	(5)		A+	A++	A++	A++	A++	A++	A++
EXCHANGERS									
HEAT EXCHANGER USER SIDE IN REFRIGERATION									
Water flow	(1)	l/s	1,00	1,26	1,43	1,54	1,70	1,83	1,94
Pressure drop	(1)	kPa	23,8	22,7	29,2	33,9	18,7	21,7	24,4
HEAT EXCHANGER USER SIDE IN HEATING									
Water flow	(3)	l/s	1,05	1,49	1,60	1,73	1,77	1,93	2,18
Pressure drop	(3)	kPa	26,2	31,6	36,5	42,7	20,3	24,1	30,9
REFRIGERANT CIRCUIT									
Compressors nr.		N°	1	1	1	1	1	1	1
No. Circuits		N°	1	1	1	1	1	1	1
Refrigerant charge		kg	5,90	9,30	9,30	9,30	10,8	10,8	10,8
NOISE LEVEL									
Sound power level in cooling	(6)(7)	dB(A)	71	72	74	75	76	77	77
Sound power level in heating	(6)(8)	dB(A)	72	73	75	76	77	78	78
Sound Pressure	(9)	dB(A)	55	56	58	59	60	61	61
SIZE AND WEIGHT									
A	(10)	mm	1470	1470	1470	1470	1720	1720	1720
B	(10)	mm	570	570	570	570	670	670	670
H	(10)	mm	1200	1700	1700	1700	1700	1700	1700
Operating weight	(10)	kg	220	285	285	285	330	330	330

Notes:
1 Plant (side) cooling exchanger water (in/out) 23°C/18°C; Source (side) heat exchanger air (in) 35°C.
2 Values in compliance with EN14511-3:2013.
3 Plant (side) heat exchanger water (in/out) 30°C/35°C; Source (side) heat exchanger air (in) 7°C - 87% R.H.
4 Seasonal space heating energy efficiency class LOW TEMPERATURE in AVERAGE climate conditions [REGULATION (EU) N. 813/2013]
5 Seasonal space heating energy efficiency class MEDIA TEMPERATURE in AVERAGE climate conditions [REGULATION (EU) N. 813/2013]
6 Sound power on the basis of measurements made in compliance with ISO 9614.
7 Sound power level in cooling, outdoors.
8 Sound power level in heating, outdoors.
9 Average sound pressure level at 1m distance, unit in a free field on a reflective surface; non-binding value calculated from the sound power level.
10 Unit in standard configuration/execution, without optional accessories.
11 Seasonal energy efficiency of the cooling environment [REGULATION (EU) N. 2016/2281]
12 Seasonal space heating energy index
13 Seasonal energy efficiency of the space cooling
14 Seasonal performance coefficient
15 Seasonal space heating energy efficiency
The units highlighted in this publication contain HFC R410A [GWP_{100} 2088] fluorinated greenhouse gases.
Certified data in EUROVENT

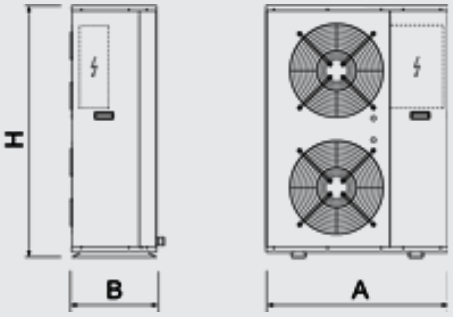
H
B
A

HEAT PUMPS

i-NRG 0061m - 0061t

Reversible heat pump with inverter compressor, total heat recovery, air source for indoor/outdoor installation 14,7-14,7 kW



The new i-NRG heat pump provides exactly the energy required by the system, perfectly following the real load of the building, thanks to the modulation of the DC inverter fan. One single unit for the highest efficiency, sustainability and huge savings, thanks to the advantages of DC frequency driven fans and circulating pumps (inverter) for both plant and domestic hot water circuits. i-NRG is the new generation heat pump for all year round operation in any operating mode: single cycle (air conditioning, heating, domestic hot water) as well as combined cycle in total heat recovery (domestic hot water together with cooling). Domestic hot water production is guaranteed by the dedicated exchanger for heat recovery: total, for free domestic hot water production, or partial. Domestic hot water is stored in a properly dimensioned storage tank. The unit can be installed indoor or outdoor, thus ensuring complete flexibility. Extended operating limits for all year, specially in heating:
-Maximum flow temperature 60°C
-Maximum external air temperature 45°C
-Minimum external air temperature -15°C

Version

- Basic

Features

Structure and base in hot-dip galvanised steel with epoxy powder paint finish.
High efficiency and low pressure drop stainless steel AISI 316 plate exchangers (at the domestic hot water side). It is positioned next after the compressor and it ensures the domestic hot water production. The unit has full or partial recovery system, with the constant optimization of efficiency through logic advanced adjusting controller
High efficiency and low pressure drop stainless steel AISI 316 plate exchangers meet the supply of both hot and cold water for the facility, regardless of the domestic hot water
DC inverter scroll compressor with self-adaptive capacity adjustment. Reduced inrush current due to modulation by an inverter.
Electronic expansion valve
Finned coils made with copper pipes and aluminium fins with large exchange surface area (100% fully quality tested)
Axial electric fan in continuous current housed in aerodynamic conveyor profile with safety grill.
Low external air temperature device:
continuous fan speed regulation with pressure switch
The water circuit comes complete with:

- Variable flow circulator plant side, the curves are selected by control. Class A energy efficiency
- Variable flow circulator domestic hot water side. Class A energy efficiency.
- Expansion tank
- Safety valve
- Pressure switch system side
- Pressure gauge
- Manual filling assembly

Accessory

- Wired room terminal with backlit display, and with temperature and umidity probe
- Extension module for system configuration
- Acoustic insulation casing kit (MANDATORY for outside installation)
- Rectangular air ducts kit and grills for indoor installation
- Electric heater of integration for the heating system
- Electric heater for hot water cylinder, of integration and for anti-legionellosis
- Cascade management kit
- Serial card RS485 for ModBus
- i-BT85 85 liters storage tank, to place under the heat pump
- Buffer tank 35,100,200 liters
- Hot water cylinder 300,500 liters
- 300 liters thermal store for domestic hot water, for DOMH2O kit
- 300,500,1000 liters thermal store for domestic hot water with solar heat exchanger, for DOMH2O kit
- DOMH2O15 e DOMH2O24 kit for domestic hot water with external plate heat exchanger and pump

Controls

NADISYSTEM
Electronic control Nadisystem provides great application flexibility. The remote keyboard kit wired indoor and outdoor temperature sensors allow dynamic control of delivery temperature water, optimizing comfort in the room and increasing the energy efficiency. The electronic board allows you to manage:
-Wired remote control, backlit display complete with remote temperature and humidity probe
-outdoor temperature sensor for water plant side modular set point compensation
-a zone of direct heating for radiator, floor heating or fan coil
-a zone with mix valve for floor heating
-Electrical heating element for possible integration and anti-legionella cycle for cylinder
-boiler or electric heater in substitution or in addition
-the room controller can customise up to six time bands. The presence of the programmable timer allows the creation of an operating profile containing up to 6 time bands
-up to 4 heat pump in cascade (with N-CM component)
-several solutions through appropriate configurations of the controller and use of dedicated extension modules (accessorie), up to 5 zone
The defrost adopts a proprietary self-adaptive logic, which features the monitoring of numerous operational parameters. This allows to reduce the number and duration of the defrost cycles, with a benefit for the overall energy efficiency.



APPLICATION HYDRONIC TERMINAL

i-NRG			0061m	0061t
Power supply		V/ph/Hz	230/1/50	400/3/50
COOLING ONLY (GROSS VALUE)				
Cooling capacity	(1)	kW	14,7	14,7
Total power input	(1)	kW	5,10	5,10
EER	(1)	kW/kW	2,88	2,88
ESEER	(1)	kW/kW	4,47	4,33
COOLING ONLY (EN14511 VALUE)				
Cooling capacity	(1)(2)	kW	14,7	14,7
EER	(1)(2)	kW/kW	2,85	2,85
ESEER	(1)(2)	kW/kW	4,24	4,20
HEATING ONLY (GROSS VALUE)				
Total heating capacity	(3)	kW	15,7	15,7
Total power input	(3)	kW	4,80	4,70
COP	(3)	kW/kW	3,27	3,34
HEATING ONLY (EN14511 VALUE)				
Total heating capacity	(2)(3)	kW	15,7	15,7
COP	(2)(3)	kW/kW	3,21	3,28
COOLING WITH TOTAL HEAT RECOVERY				
Cooling capacity	(4)	kW	13,7	13,8
Total power input	(4)	kW	4,40	4,40
Recovery heat exchanger capacity	(4)	kW	17,9	18,0
TOTAL RECOVERY ONLY				
Total heating capacity	(3)	kW	15,7	15,7
Total power input	(3)	kW	4,80	4,70
ENERGY EFFICIENCY				
SEASONAL EFFICIENCY IN COOLING (Reg. EU 2016/2281)				
Ambient refrigeration				
Prated,c	(11)	kW	-	-
SEER	(11)(12)		-	-
Performance ηs	(11)(13)	%	-	-
SEASONAL EFFICIENCY IN HEATING (Reg. EU 813/2013)				
PDesign	(5)	kW	11,2	11,2
SCOP	(5)(14)		3,80	3,74
Performance ηs	(5)(15)	%	149	147
Seasonal efficiency class	(5)		A+	A+
EXCHANGERS				
HEAT EXCHANGER USER SIDE IN REFRIGERATION				
Water flow	(1)	l/s	0,70	0,70
Available unit's head	(1)	kPa	89,2	89,2
HEAT EXCHANGER USER SIDE IN HEATING				
Water flow	(3)	l/s	0,76	0,76
Available unit's head	(3)	kPa	84,3	84,3
HEAT EXCHANGER RECOVERY USER SIDE IN REFRIGERATION				
Water flow	(4)	l/s	0,86	0,87
Pressure drop	(4)	kPa	37,3	37,8
HEAT EXCHANGER RECOVERY USER SIDE IN HEATING				
Water flow	(4)	l/s	0,74	0,74
Pressure drop	(4)	kPa	27,9	27,8
REFRIGERANT CIRCUIT				
Compressors nr.		N°	1	1
No. Circuits		N°	1	1
Refrigerant charge		kg	6,55	6,55
NOISE LEVEL				
Sound power level in cooling	(6)(7)	dB(A)	68	69
Sound power level in heating	(6)(8)	dB(A)	69	70
Sound Pressure	(9)	dB(A)	52	53
SIZE AND WEIGHT				
A	(10)	mm	750	750
B	(10)	mm	1050	1050
H	(10)	mm	1600	1600
Operating weight	(10)	kg	260	260

Notes:
1 Plant (side) cooling exchanger water (in/out) 12°C/7°C; Source (side) heat exchanger air (in) 35°C.
2 Values in compliance with EN14511-3:2013.
3 Plant (side) heat exchanger water (in/out) 40°C/45°C; Source (side) heat exchanger air (in) 7°C - 87% R.H.
4 Plant (side) cooling exchanger water (in/out) 12°C/7°C; Plant (auxiliary side) heat exchanger recovery water (in/out) 45°C/50°C.
5 Seasonal space heating energy efficiency class LOW TEMPERATURE in AVERAGE climate conditions [REGULATION (EU) N. 813/2013]
6 Sound power on the basis of measurements made in compliance with ISO 9614.
7 Sound power level in cooling, outdoors.
8 Sound power level in heating, outdoors.
9 Average sound pressure level at 1m distance, unit in a free field on a reflective surface; non-binding value calculated from the sound power level.
10 Unit in standard configuration/execution, without optional accessories.
11 Seasonal energy efficiency of the cooling environment [REGULATION (EU) N. 2016/2281]
12 Seasonal space heating energy index
13 Seasonal energy efficiency of the space cooling
14 Seasonal performance coefficient
15 Seasonal space heating energy efficiency
The units highlighted in this publication contain HFC R410A [GWP_{100} 2088] fluorinated greenhouse gases.

APPLICATION FLOOR HEATING

i-NRG			0061m	0061t
Power supply		V/ph/Hz	230/1/50	400/3/50
COOLING ONLY (GROSS VALUE)				
Cooling capacity	(1)	kW	19,7	19,7
Total power input	(1)	kW	5,38	5,38
EER	(1)	kW/kW	3,66	3,66
ESEER	(1)	kW/kW	4,47	4,33
COOLING ONLY (EN14511 VALUE)				
Cooling capacity	(1)(2)	kW	19,7	19,7
EER	(1)(2)	kW/kW	3,61	3,61
ESEER	(1)(2)	kW/kW	4,24	4,20
HEATING ONLY (GROSS VALUE)				
Total heating capacity	(3)	kW	16,2	16,3
Total power input	(3)	kW	4,02	3,96
COP	(3)	kW/kW	4,03	4,12
HEATING ONLY (EN14511 VALUE)				
Total heating capacity	(2)(3)	kW	16,2	16,2
COP	(2)(3)	kW/kW	3,96	4,03
COOLING WITH TOTAL HEAT RECOVERY				
Cooling capacity	(4)	kW	19,0	19,2
Total power input	(4)	kW	4,35	4,35
Recovery heat exchanger capacity	(4)	kW	23,1	23,3
TOTAL RECOVERY ONLY				
Total heating capacity	(3)	kW	16,2	16,3
Total power input	(3)	kW	4,02	3,96
ENERGY EFFICIENCY				
SEASONAL EFFICIENCY IN COOLING (Reg. EU 2016/2281)				
Ambient refrigeration				
Prated,c	(11)	kW	-	-
SEER	(11)(12)		-	-
Performance ηs	(11)(13)	%	-	-
SEASONAL EFFICIENCY IN HEATING (Reg. EU 813/2013)				
PDesign	(5)	kW	11,2	11,2
SCOP	(5)(14)		3,80	3,74
Performance ηs	(5)(15)	%	149	147
Seasonal efficiency class	(5)		A+	A+
EXCHANGERS				
HEAT EXCHANGER USER SIDE IN REFRIGERATION				
Water flow	(1)	l/s	0,94	0,94
Available unit's head	(1)	kPa	65,1	65,2
HEAT EXCHANGER USER SIDE IN HEATING				
Water flow	(3)	l/s	0,78	0,78
Available unit's head	(3)	kPa	82,1	82,0
HEAT EXCHANGER RECOVERY USER SIDE IN REFRIGERATION				
Water flow	(4)	l/s	1,12	1,12
Pressure drop	(4)	kPa	62,6	63,4
HEAT EXCHANGER RECOVERY USER SIDE IN HEATING				
Water flow	(4)	l/s	0,74	0,74
Pressure drop	(4)	kPa	27,9	27,8
REFRIGERANT CIRCUIT				
Compressors nr.		N°	1	1
No. Circuits		N°	1	1
Refrigerant charge		kg	6,55	6,55
NOISE LEVEL				
Sound power level in cooling	(6)(7)	dB(A)	68	69
Sound power level in heating	(6)(8)	dB(A)	69	70
Sound Pressure	(9)	dB(A)	52	53
SIZE AND WEIGHT				
A	(10)	mm	750	750
B	(10)	mm	1050	1050
H	(10)	mm	1600	1600
Operating weight	(10)	kg	260	260

Notes:
1 Plant (side) cooling exchanger water (in/out) 23°C/18°C; Source (side) heat exchanger air (in) 35°C.
2 Values in compliance with EN14511-3:2013.
3 Plant (side) heat exchanger water (in/out) 30°C/35°C; Source (side) heat exchanger air (in) 7°C - 87% R.H.
4 Plant (side) cooling exchanger water (in/out) 23°C/18°C; Plant (auxiliary side) heat exchanger recovery water (in/out) 45°C/50°C.
5 Seasonal space heating energy efficiency class LOW TEMPERATURE in AVERAGE climate conditions [REGULATION (EU) N. 813/2013]
6 Sound power on the basis of measurements made in compliance with ISO 9614.
7 Sound power level in cooling, outdoors.
8 Sound power level in heating, outdoors.
9 Average sound pressure level at 1m distance, unit in a free field on a reflective surface; non-binding value calculated from the sound power level.
10 Unit in standard configuration/execution, without optional accessories.
11 Seasonal energy efficiency of the cooling environment [REGULATION (EU) N. 2016/2281]
12 Seasonal space heating energy index
13 Seasonal energy efficiency of the space cooling
14 Seasonal performance coefficient
15 Seasonal space heating energy efficiency
The units highlighted in this publication contain HFC R410A [GWP_{100} 2088] fluorinated greenhouse gases.

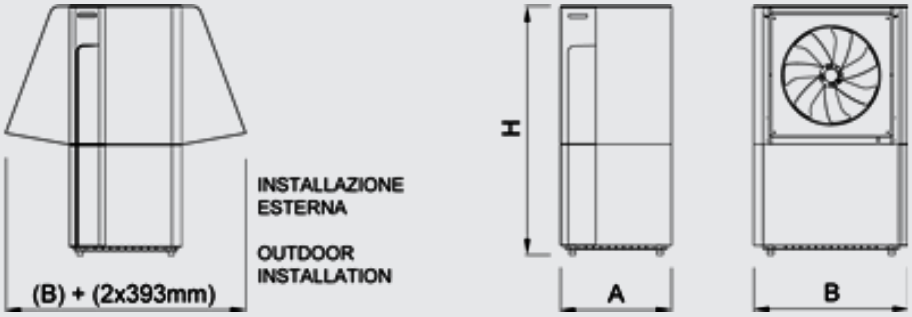
INSTALLAZIONE
ESTERNA
OUTDOOR
INSTALLATION
(B) + (2x393mm)
H
A
B

HEAT PUMPS

AWR DHW2 XE 0021m - 0101ts

Reversible heat pump, total heat recovery, air source for outdoor installation 5,80-22,8 kW



PRANA DHW is the new HIGH EFFICIENCY heat pump for all year round operation in any operating mode: single cycle (air conditioning, heating, domestic hot water) as well as combined cycle in total heat recovery (domestic hot water together with cooling). Energy efficiency is highest during the summer cycle, when, thanks to the full recovery of the heat, the production of hot water is free. During the combined use, the DHW exchanger uses the temperature of the discharge gases to gets inside the accumulation sanitary water as high as 65° C.
The advanced electronic regulation developed by Climaveneta ensures the highest operational flexibility, fast working condition a significant increase in the overall COP, which go hand in hand with electricity and space reduction.
Advantages, combined with the possibility of completely eliminating the traditional boiler, making heat pumps PRANA DHW the ideal solution for energy saving applications in residential, hotel and small sector.

Version

-	Basic
SL	Super-low noise version

Features

Structure and base in hot-dip galvanised steel with epoxy powder paint finish.
High efficiency and low pressure drop stainless steel AISI 316 plate exchangers (at the domestic hot water side). It is positioned next after the compressor and it ensures the domestic hot water production. The unit has full or partial recovery system, with the constant optimization of efficiency through logic advanced adjusting controller
High efficiency and low pressure drop stainless steel AISI 316 plate exchangers meet the supply of both hot and cold water for the facility, regardless of the domestic hot water
Hermetic scroll type compressors, equipped with the crankcase heater and thermal protection
Finned coils made with copper pipes and aluminium fins with large exchange surface area (100% fully quality tested)
Axial electric fans, external rotor, 6-pole electric motor fitted with thermal protection, housed in aerodynamic conveyor profile with safety grill
Low external air temperature device:
continuous fan speed regulation with pressure switch
Coil protection grille
Soft starter for 230V units /ms and 400V units /ts
The water circuit comes complete with:
- Variable flow circulator plant side, the curves are selected by control. Class A energy efficiency
- Variable flow circulator domestic hot water side. Class A energy efficiency.
- Pressure switch system side
- Expansion tank
- Safety valve
- Manual filling assembly
- Pressure gauge
- Air vent valve (plant side).

Accessory

- Wired room terminal with backlit display, and with temperature and umidity probe
- Extension module for system configuration
- Electric heater of integration for the heating system
- Electric heater for hot water cylinder, of integration and for anti-legionellosis
- Serial card RS485 for ModBus
- Cascade management kit
- Buffer tank 35,100,200 liters
- Hot water cylinder 300,500 liters
- 300 liters thermal store for domestic hot water, for DOMH2O kit
- 300,500,1000 liters thermal store for domestic hot water with solar heat exchanger, for DOMH2O kit
- DOMH2O15 e DOMH2O24 kit for domestic hot water with external plate heat exchanger and pump

Controls

NADISYSTEM
Electronic control Nadisystem provides great application flexibility. The remote keyboard kit wired indoor and outdoor temperature sensors allow dynamic control of delivery temperature water, optimizing comfort in the room and increasing the energy efficiency.
The electronic board allows you to manage:
-Wired remote control, backlit display complete with remote temperature and humidity probe
-outdoor temperature sensor for water plant side modular set point compensation
-a zone of direct heating for radiator, floor heating or fan coil
-a zone with mix valve for floor heating
-Electrical heating element for possible integration and anti-legionella cycle for cylinder
-boiler or electric heater in substitution or in addition
-the room controller can customise up to six time bands. The presence of the programmable timer allows the creation of an operating profile containing up to 6 time bands
-up to 4 heat pump in cascade (with N-CM component)
-several solutions through appropriate configurations of the controller and use of dedicated extension modules (accessorie), up to 5 zone
The defrost adopts a proprietary self-adaptive logic, which features the monitoring of numerous operational parameters. This allows to reduce the number and duration of the defrost cycles, with a benefit for the overall energy efficiency.



APPLICATION HYDRONIC TERMINAL

AWR DHW2 XE / B			0021m	0025m	0041m	0025t	0041t
Power supply		V/ph/Hz	230/1/50	230/1/50	230/1/50	400/3/50	400/3/50
COOLING ONLY (GROSS VALUE)							
Cooling capacity	(1)	kW	5,80	6,90	10,0	6,90	9,90
Total power input	(1)	kW	2,20	2,60	3,60	2,50	3,50
EER	(1)	kW/kW	2,64	2,65	2,78	2,76	2,83
ESEER	(1)	kW/kW					
COOLING ONLY (EN14511 VALUE)							
Cooling capacity	(1)(2)	kW	5,81	6,93	10,0	6,93	9,94
EER	(1)(2)	kW/kW	2,67	2,68	2,83	2,79	2,88
ESEER	(1)(2)	kW/kW	3,09	3,15	3,31	3,28	3,38
HEATING ONLY (GROSS VALUE)							
Total heating capacity	(3)	kW	7,30	8,70	12,5	8,60	12,3
Total power input	(3)	kW	2,30	2,70	3,80	2,60	3,70
COP	(3)	kW/kW	3,17	3,22	3,29	3,31	3,32
HEATING ONLY (EN14511 VALUE)							
Total heating capacity	(2)(3)	kW	7,29	8,67	12,5	8,57	12,3
COP	(2)(3)	kW/kW	3,21	3,25	3,33	3,34	3,37
COOLING WITH TOTAL HEAT RECOVERY							
Cooling capacity	(4)	kW	4,95	6,02	8,91	6,00	8,83
Total power input	(4)	kW	2,12	2,47	3,54	2,47	3,37
Recovery heat exchanger capacity	(4)	kW	6,95	8,34	12,2	8,32	12,0
TOTAL RECOVERY ONLY							
Total heating capacity	(3)	kW	7,30	8,70	12,5	8,60	12,3
Total power input	(3)	kW	2,30	2,70	3,80	2,60	3,70
ENERGY EFFICIENCY							
SEASONAL EFFICIENCY IN COOLING (Reg. EU 2016/2281)							
Ambient refrigeration							
Prated,c	(11)	kW	-	-	-	-	-
SEER	(11)(12)		-	-	-	-	-
Performance ηs	(11)(13)	%	-	-	-	-	-
SEASONAL EFFICIENCY IN HEATING (Reg. EU 813/2013)							
PDesign	(5)	kW	5,83	6,01	9,49	5,75	9,33
SCOP	(5)(14)		3,23	3,20	3,41	3,25	3,43
Performance ηs	(5)(15)	%	126	125	134	127	134
Seasonal efficiency class	(5)		A+	A+	A+	A+	A+
EXCHANGERS							
HEAT EXCHANGER USER SIDE IN REFRIGERATION							
Water flow	(1)	l/s	0,28	0,33	0,48	0,33	0,47
Available unit's head	(1)	kPa	60,4	105	95,2	105	95,7
HEAT EXCHANGER USER SIDE IN HEATING							
Water flow	(3)	l/s	0,35	0,42	0,60	0,42	0,59
Available unit's head	(3)	kPa	55,1	96,8	82,1	97,2	83,2
HEAT EXCHANGER RECOVERY USER SIDE IN REFRIGERATION							
Water flow	(4)	l/s	0,34	0,40	0,59	0,40	0,58
Pressure drop	(4)	kPa	8,27	8,54	11,3	8,50	10,9
HEAT EXCHANGER RECOVERY USER SIDE IN HEATING							
Water flow	(4)	l/s	0,35	0,41	0,59	0,41	0,59
Pressure drop	(4)	kPa	8,79	9,04	11,5	8,86	11,3
REFRIGERANT CIRCUIT							
Compressors nr.		N°	1	1	1	1	1
No. Circuits		N°	1	1	1	1	1
Refrigerant charge		kg	5,76	6,36	13,0	6,36	13,0
NOISE LEVEL							
Sound power level in cooling	(6)(7)	dB(A)	69	70	71	70	71
Sound power level in heating	(6)(8)	dB(A)	65	70	70	65	70
Sound Pressure	(9)	dB(A)	54	55	55	55	55
SIZE AND WEIGHT							
A	(10)	mm	1250	1250	1700	1250	1700
B	(10)	mm	420	420	650	420	650
H	(10)	mm	1125	1125	1200	1125	1200
Operating weight	(10)	kg	165	165	295	165	295

Notes:
1 Plant (side) cooling exchanger water (in/out) 12°C/7°C; Source (side) heat exchanger air (in) 35°C.
2 Values in compliance with EN14511-3:2013.
3 Plant (side) heat exchanger water (in/out) 40°C/45°C; Source (side) heat exchanger air (in) 7°C - 87% R.H.
4 Plant (side) cooling exchanger water (in/out) 12°C/7°C; Plant (auxiliary side) heat exchanger recovery water (in/out) 45°C/50°C.
5 Seasonal space heating energy efficiency class LOW TEMPERATURE in AVERAGE climate conditions [REGULATION (EU) N. 813/2013]
6 Sound power on the basis of measurements made in compliance with ISO 9614.
7 Sound power level in cooling, outdoors.
8 Sound power level in heating, outdoors.
9 Average sound pressure level at 1m distance, unit in a free field on a reflective surface; non-binding value calculated from the sound power level.
10 Unit in standard configuration/execution, without optional accessories.
11 Seasonal energy efficiency of the cooling environment [REGULATION (EU) N. 2016/2281]
12 Seasonal space heating energy index
13 Seasonal energy efficiency of the space cooling
14 Seasonal performance coefficient
15 Seasonal space heating energy efficiency
The units highlighted in this publication contain HFC R407C [GWP_{100} 1774] fluorinated greenhouse gases.

APPLICATION FLOOR HEATING

AWR DHW2 XE / B			0021m	0025m	0041m	0025t	0041t
Power supply		V/ph/Hz	230/1/50	230/1/50	230/1/50	400/3/50	400/3/50
COOLING ONLY (GROSS VALUE)							
Cooling capacity	(1)	kW	8,21	9,76	13,9	9,78	13,9
Total power input	(1)	kW	2,18	2,60	3,68	2,50	3,62
EER	(1)	kW/kW	3,77	3,75	3,78	3,91	3,84
ESEER	(1)	kW/kW					
COOLING ONLY (EN14511 VALUE)							
Cooling capacity	(1)(2)	kW	8,22	9,79	13,9	9,81	13,9
EER	(1)(2)	kW/kW	3,83	3,83	3,85	3,99	3,91
ESEER	(1)(2)	kW/kW	3,09	3,15	3,31	3,28	3,38
HEATING ONLY (GROSS VALUE)							
Total heating capacity	(3)	kW	7,59	9,00	12,9	8,84	12,6
Total power input	(3)	kW	1,87	2,17	3,06	2,08	2,99
COP	(3)	kW/kW	4,06	4,15	4,22	4,25	4,21
HEATING ONLY (EN14511 VALUE)							
Total heating capacity	(2)(3)	kW	7,58	8,96	12,8	8,81	12,6
COP	(2)(3)	kW/kW	4,14	4,19	4,27	4,30	4,29
COOLING WITH TOTAL HEAT RECOVERY							
Cooling capacity	(4)	kW	7,20	8,76	12,7	8,73	12,8
Total power input	(4)	kW	2,01	2,35	3,43	2,35	3,31
Recovery heat exchanger capacity	(4)	kW	9,10	11,0	16,0	10,9	15,9
TOTAL RECOVERY ONLY							
Total heating capacity	(3)	kW	7,59	9,00	12,9	8,84	12,6
Total power input	(3)	kW	1,87	2,17	3,06	2,08	2,99
ENERGY EFFICIENCY							
SEASONAL EFFICIENCY IN COOLING (Reg. EU 2016/2281)							
Ambient refrigeration							
Prated,c	(11)	kW	-	-	-	-	-
SEER	(11)(12)		-	-	-	-	-
Performance ηs	(11)(13)	%	-	-	-	-	-
SEASONAL EFFICIENCY IN HEATING (Reg. EU 813/2013)							
PDesign	(5)	kW	5,83	6,01	9,49	5,75	9,33
SCOP	(5)(14)		3,23	3,20	3,41	3,25	3,43
Performance ηs	(5)(15)	%	126	125	134	127	134
Seasonal efficiency class	(5)		A+	A+	A+	A+	A+
EXCHANGERS							
HEAT EXCHANGER USER SIDE IN REFRIGERATION							
Water flow	(1)	l/s	0,39	0,47	0,67	0,47	0,67
Available unit's head	(1)	kPa	51,7	91,7	74,3	91,6	74,2
HEAT EXCHANGER USER SIDE IN HEATING							
Water flow	(3)	l/s	0,37	0,43	0,62	0,43	0,61
Available unit's head	(3)	kPa	54,1	95,5	80,3	96,2	81,7
HEAT EXCHANGER RECOVERY USER SIDE IN REFRIGERATION							
Water flow	(4)	l/s	0,44	0,53	0,77	0,53	0,77
Pressure drop	(4)	kPa	14,2	14,8	19,3	14,7	19,1
HEAT EXCHANGER RECOVERY USER SIDE IN HEATING							
Water flow	(4)	l/s	0,35	0,41	0,59	0,41	0,59
Pressure drop	(4)	kPa	8,79	9,04	11,5	8,86	11,3
REFRIGERANT CIRCUIT							
Compressors nr.		N°	1	1	1	1	1
No. Circuits		N°	1	1	1	1	1
Refrigerant charge		kg	5,76	6,36	13,0	6,36	13,0
NOISE LEVEL							
Sound power level in cooling	(6)(7)	dB(A)	69	70	71	70	71
Sound power level in heating	(6)(8)	dB(A)	65	70	70	65	70
Sound Pressure	(9)	dB(A)	54	55	55	55	55
SIZE AND WEIGHT							
A	(10)	mm	1250	1250	1700	1250	1700
B	(10)	mm	420	420	650	420	650
H	(10)	mm	1125	1125	1200	1125	1200
Operating weight	(10)	kg	165	165	295	165	295

Notes:
1 Plant (side) cooling exchanger water (in/out) 23°C/18°C; Source (side) heat exchanger air (in) 35°C.
2 Values in compliance with EN14511-3:2013.
3 Plant (side) heat exchanger water (in/out) 30°C/35°C; Source (side) heat exchanger air (in) 7°C - 87% R.H.
4 Plant (side) cooling exchanger water (in/out) 23°C/18°C; Plant (auxiliary side) heat exchanger recovery water (in/out) 45°C/50°C.
5 Seasonal space heating energy efficiency class LOW TEMPERATURE in AVERAGE climate conditions [REGULATION (EU) N. 813/2013]
6 Sound power on the basis of measurements made in compliance with ISO 9614.
7 Sound power level in cooling, outdoors.
8 Sound power level in heating, outdoors.
9 Average sound pressure level at 1m distance, unit in a free field on a reflective surface; non-binding value calculated from the sound power level.
10 Unit in standard configuration/execution, without optional accessories.
11 Seasonal energy efficiency of the cooling environment [REGULATION (EU) N. 2016/2281]
12 Seasonal space heating energy index
13 Seasonal energy efficiency of the space cooling
14 Seasonal performance coefficient
15 Seasonal space heating energy efficiency
The units highlighted in this publication contain HFC R407C [GWP_{100} 1774] fluorinated greenhouse gases.

APPLICATION HYDRONIC TERMINAL

AWR DHW2 XE / SL			0065t	0101t
Power supply		V/ph/Hz	400/3/50	400/3/50
COOLING ONLY (GROSS VALUE)				
Cooling capacity	(1)	kW	15,1	22,8
Total power input	(1)	kW	5,10	7,80
EER	(1)	kW/kW	2,96	2,92
ESEER	(1)	kW/kW		
COOLING ONLY (EN14511 VALUE)				
Cooling capacity	(1)(2)	kW	15,2	22,9
EER	(1)(2)	kW/kW	2,95	2,95
ESEER	(1)(2)	kW/kW	3,30	3,14
HEATING ONLY (GROSS VALUE)				
Total heating capacity	(3)	kW	19,0	28,8
Total power input	(3)	kW	5,90	8,80
COP	(3)	kW/kW	3,22	3,27
HEATING ONLY (EN14511 VALUE)				
Total heating capacity	(2)(3)	kW	18,9	28,7
COP	(2)(3)	kW/kW	3,21	3,29
COOLING WITH TOTAL HEAT RECOVERY				
Cooling capacity	(4)	kW	14,1	21,3
Total power input	(4)	kW	4,61	6,76
Recovery heat exchanger capacity	(4)	kW	18,5	27,7
TOTAL RECOVERY ONLY				
Total heating capacity	(3)	kW	19,0	28,8
Total power input	(3)	kW	5,90	8,80
ENERGY EFFICIENCY				
SEASONAL EFFICIENCY IN COOLING (Reg. EU 2016/2281)				
Ambient refrigeration				
Prated,c	(11)	kW	-	-
SEER	(11)(12)		-	-
Performance ηs	(11)(13)	%	-	-
SEASONAL EFFICIENCY IN HEATING (Reg. EU 813/2013)				
PDesign	(5)	kW	15,1	20,5
SCOP	(5)(14)		3,43	3,30
Performance ηs	(5)(15)	%	134	129
Seasonal efficiency class	(5)		A+	A+
EXCHANGERS				
HEAT EXCHANGER USER SIDE IN REFRIGERATION				
Water flow	(1)	l/s	0,72	1,09
Available unit's head	(1)	kPa	110	107
HEAT EXCHANGER USER SIDE IN HEATING				
Water flow	(3)	l/s	0,92	1,39
Available unit's head	(3)	kPa	105	97,9
HEAT EXCHANGER RECOVERY USER SIDE IN REFRIGERATION				
Water flow	(4)	l/s	0,89	1,33
Pressure drop	(4)	kPa	10,1	9,65
HEAT EXCHANGER RECOVERY USER SIDE IN HEATING				
Water flow	(4)	l/s	0,91	1,38
Pressure drop	(4)	kPa	10,5	10,3
REFRIGERANT CIRCUIT				
Compressors nr.		N°	1	1
No. Circuits		N°	1	1
Refrigerant charge		kg	16,7	18,0
NOISE LEVEL				
Sound power level in cooling	(6)(7)	dB(A)	73	74
Sound power level in heating	(6)(8)	dB(A)	74	75
Sound Pressure	(9)	dB(A)	57	58
SIZE AND WEIGHT				
A	(10)	mm	1700	1700
B	(10)	mm	650	650
H	(10)	mm	1700	1700
Operating weight	(10)	kg	348	390

Notes:
1 Plant (side) cooling exchanger water (in/out) 12°C/7°C; Source (side) heat exchanger air (in) 35°C.
2 Values in compliance with EN14511-3:2013.
3 Plant (side) heat exchanger water (in/out) 40°C/45°C; Source (side) heat exchanger air (in) 7°C - 87% R.H.
4 Plant (side) cooling exchanger water (in/out) 12°C/7°C; Plant (auxiliary side) heat exchanger recovery water (in/out) 45°C/50°C.
5 Seasonal space heating energy efficiency class LOW TEMPERATURE in AVERAGE climate conditions [REGULATION (EU) N. 813/2013]
6 Sound power on the basis of measurements made in compliance with ISO 9614.
7 Sound power level in cooling, outdoors.
8 Sound power level in heating, outdoors.
9 Average sound pressure level at 1m distance, unit in a free field on a reflective surface; non-binding value calculated from the sound power level.
10 Unit in standard configuration/execution, without optional accessories.
11 Seasonal energy efficiency of the cooling environment [REGULATION (EU) N. 2016/2281]
12 Seasonal space heating energy index
13 Seasonal energy efficiency of the space cooling
14 Seasonal performance coefficient
15 Seasonal space heating energy efficiency
The units highlighted in this publication contain HFC R407C [GWP_{100} 1774] fluorinated greenhouse gases.

APPLICATION FLOOR HEATING

AWR DHW2 XE / SL			0065t	0101t
Power supply		V/ph/Hz	400/3/50	400/3/50
COOLING ONLY (GROSS VALUE)				
Cooling capacity	(1)	kW	21,0	31,3
Total power input	(1)	kW	5,57	8,47
EER	(1)	kW/kW	3,77	3,70
ESEER	(1)	kW/kW		
COOLING ONLY (EN14511 VALUE)				
Cooling capacity	(1)(2)	kW	21,1	31,4
EER	(1)(2)	kW/kW	3,80	3,75
ESEER	(1)(2)	kW/kW	3,30	3,14
HEATING ONLY (GROSS VALUE)				
Total heating capacity	(3)	kW	19,4	29,4
Total power input	(3)	kW	4,68	7,06
COP	(3)	kW/kW	4,15	4,16
HEATING ONLY (EN14511 VALUE)				
Total heating capacity	(2)(3)	kW	19,3	29,3
COP	(2)(3)	kW/kW	4,13	4,19
COOLING WITH TOTAL HEAT RECOVERY				
Cooling capacity	(4)	kW	20,5	30,4
Total power input	(4)	kW	4,67	6,78
Recovery heat exchanger capacity	(4)	kW	24,8	36,8
TOTAL RECOVERY ONLY				
Total heating capacity	(3)	kW	19,4	29,4
Total power input	(3)	kW	4,68	7,06
ENERGY EFFICIENCY				
SEASONAL EFFICIENCY IN COOLING (Reg. EU 2016/2281)				
Ambient refrigeration				
Prated,c	(11)	kW	-	-
SEER	(11)(12)		-	-
Performance ηs	(11)(13)	%	-	-
SEASONAL EFFICIENCY IN HEATING (Reg. EU 813/2013)				
PDesign	(5)	kW	15,1	20,5
SCOP	(5)(14)		3,43	3,30
Performance ηs	(5)(15)	%	134	129
Seasonal efficiency class	(5)		A+	A+
EXCHANGERS				
HEAT EXCHANGER USER SIDE IN REFRIGERATION				
Water flow	(1)	l/s	1,01	1,50
Available unit's head	(1)	kPa	102	93,5
HEAT EXCHANGER USER SIDE IN HEATING				
Water flow	(3)	l/s	0,93	1,41
Available unit's head	(3)	kPa	104	97,0
HEAT EXCHANGER RECOVERY USER SIDE IN REFRIGERATION				
Water flow	(4)	l/s	1,20	1,78
Pressure drop	(4)	kPa	18,2	17,1
HEAT EXCHANGER RECOVERY USER SIDE IN HEATING				
Water flow	(4)	l/s	0,91	1,38
Pressure drop	(4)	kPa	10,5	10,3
REFRIGERANT CIRCUIT				
Compressors nr.		N°	1	1
No. Circuits		N°	1	1
Refrigerant charge		kg	16,7	18,0
NOISE LEVEL				
Sound power level in cooling	(6)(7)	dB(A)	73	74
Sound power level in heating	(6)(8)	dB(A)	74	75
Sound Pressure	(9)	dB(A)	57	58
SIZE AND WEIGHT				
A	(10)	mm	1700	1700
B	(10)	mm	650	650
H	(10)	mm	1700	1700
Operating weight	(10)	kg	348	390

Notes:
1 Plant (side) cooling exchanger water (in/out) 23°C/18°C; Source (side) heat exchanger air (in) 35°C.
2 Values in compliance with EN14511-3:2013.
3 Plant (side) heat exchanger water (in/out) 30°C/35°C; Source (side) heat exchanger air (in) 7°C - 87% R.H.
4 Plant (side) cooling exchanger water (in/out) 23°C/18°C; Plant (auxiliary side) heat exchanger recovery water (in/out) 45°C/50°C.
5 Seasonal space heating energy efficiency class LOW TEMPERATURE in AVERAGE climate conditions [REGULATION (EU) N. 813/2013]
6 Sound power on the basis of measurements made in compliance with ISO 9614.
7 Sound power level in cooling, outdoors.
8 Sound power level in heating, outdoors.
9 Average sound pressure level at 1m distance, unit in a free field on a reflective surface; non-binding value calculated from the sound power level.
10 Unit in standard configuration/execution, without optional accessories.
11 Seasonal energy efficiency of the cooling environment [REGULATION (EU) N. 2016/2281]
12 Seasonal space heating energy index
13 Seasonal energy efficiency of the space cooling
14 Seasonal performance coefficient
15 Seasonal space heating energy efficiency
The units highlighted in this publication contain HFC R407C [GWP_{100} 1774] fluorinated greenhouse gases.

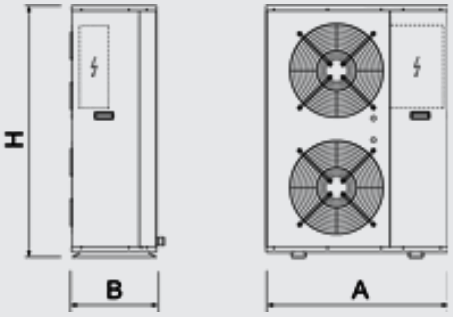
H
B
A

HEAT PUMPS

AWR-HT 0122 - 0302

High efficiency reversible heat pump, air source for outdoor installation, high water temperature 34,0-91,7 kW



Version

CA-E	Premium efficiency version: Class A enhanced
LN-CA-E	Premium efficiency version, Class A enhanced, low-noise

Configurations

-	Basic function
D	Partial condensing heat recovery function

Features

PREMIUM ´CLASS A' EFFICIENCY

The full range is available with a premium efficiency rating, over the Class A (in heating). AWR-HT/CA-E and AWR-HT/LN-CA-E guaranty premium levels of efficiency and quietness, making this range the best solution for both residential and light commercial markets.

WIDE OPERATING RANGE

Production of high temperature hot water up to 65°C for space heating and sanitary purposes. The unit can operate as standard down to -20°C outdoor temperature.

MAXIMUM RELIABILITY

AW(R)-HT offer maximum operating reliability, thanks to their two main features:
- two independent circuits for all sizes;
- system to prevent formation of ice on the coil, ensuring shorter and more efficient defrost cycles.

RENEWABLE ENERGY FOR COMMERCIAL INSTALLATIONS

Best solution in centralised residential systems such as apartment buildings, where the cost of renovation needs to be limited by keeping the same distribution system with radiators, while offering a source of renewable energy.

MODULAR CONFIGURATION

Modular configuration with capacity extension up to 400kW for medium- and high-capacity installations. Ability of managing different thermal loads according to the requirements of both heating and the domestic hot water systems.

AWR-HT represent the best solution for systems in which there is the need to combine both high temperature water for space heating and sanitary purposes, as well as air conditioning. With this solution the space heating can be easily provided by using radiators, so without any major changes on the already existing distribution system available on site. The EVI technology compressor with additional steam injection in the compressing cycle assures a water temperature of 65°C and operating limits as low as -20°C. Neither probes nor connections pipes to wells are needed; the installation is simple, this is a suitable solution for all applications.

Controls

W3000SE

The W3000SE controller is the new device designed especially for heat pump applications with incorporated logic for high temperature hot water production. The keypad features function controls and a complete LCD display for viewing data and activating the unit, via a multilevel menu, with settable display language. The controller provides temperature control for the heating and cooling systems in the air-conditioned rooms, as well as for domestic hot water. These different temperatures are managed automatically based on the different conditions in which the system operates, with the possibility to assign specific levels of priority to domestic hot water production, depending on the needs of the application. Diagnostics include complete alarm management, with “blackbox” functions (via PC) and alarm log (display or PC) for best analysis of unit be haviour. For systems made up of multiple units, differentiated device management means just a certain portion of the capacity installed can be dedicated to domestic water production, in this way ensuring more efficient energy distribution and, at the same time, guaranteeing simultaneous water delivery to the different distribution systems. The built-in clock can be used to create an operating profile containing up to 4 typical days and 10 time bands, essential for efficient programming of energy production, and fundamental for managing the Legionella prevention cycles. Defrosts use proprietary self-adaptive logic involving monitoring of multiple operating and climate parameters. This reduces the number and duration of defrosts, consequently increasing overall energy efficiency. Supervision is available with different options, using proprietarydevices or by integration into third party systems using ModBus, BACnet, BACnet-over-IP and Echelon LonWorks protocols. A dedicated wall-mounted keypad can be used for remote control of all the functions.



AWR-HT / CA-E			0122	0152	0202	0262	0302
Power supply		V/ph/Hz	400/3+N/50	400/3+N/50	400/3+N/50	400/3+N/50	400/3+N/50
COOLING ONLY (GROSS VALUE)							
Cooling capacity	(1)	kW	34,1	43,8	60,3	76,4	91,7
Total power input	(1)	kW	11,6	14,7	20,4	25,8	31,3
EER	(1)	kW/kW	2,94	2,98	2,96	2,96	2,93
ESEER	(1)	kW/kW	3,40	3,34	3,40	3,38	3,35
COOLING ONLY (EN14511 VALUE)							
Cooling capacity	(1)(2)	kW	34,0	43,7	60,2	76,2	91,4
EER	(1)(2)	kW/kW	2,91	2,95	2,93	2,93	2,90
ESEER	(1)(2)	kW/kW	3,34	3,26	3,33	3,30	3,27
Cooling energy class			B	B	B	B	B
HEATING ONLY (GROSS VALUE)							
Total heating capacity	(3)	kW	38,0	51,3	68,8	84,9	102
Total power input	(3)	kW	10,7	14,4	19,4	23,6	27,7
COP	(3)	kW/kW	3,55	3,56	3,55	3,60	3,68
HEATING ONLY (EN14511 VALUE)							
Total heating capacity	(3)(2)	kW	38,1	51,4	69,0	85,2	102
COP	(3)(2)	kW/kW	3,53	3,54	3,52	3,57	3,65
Cooling energy class			A	A	A	A	A
ENERGY EFFICIENCY							
SEASONAL EFFICIENCY IN COOLING (Reg. EU 2016/2281)							
Ambient refrigeration							
Prated,c	(11)	kW	-	-	-	-	-
SEER	(11)(12)		-	-	-	-	-
Performance ηs	(11)(13)	%	-	-	-	-	-
SEASONAL EFFICIENCY IN HEATING (Reg. EU 813/2013)							
PDesign	(4)	kW	28,4	33,8	47,5	58,5	70,6
SCOP	(4)(14)		3,24	3,16	3,22	3,26	3,35
Performance ηs	(4)(15)	%	127	124	126	127	131
Seasonal efficiency class	(4)		A+	A+	A+	A+	-
PDesign	(5)	kW	30,5	36,8	50,7	63,3	74,7
SCOP	(5)(14)		3,00	2,98	3,01	3,05	3,12
Performance ηs	(5)(15)	%	117	116	117	119	122
Seasonal efficiency class	(5)		A+	A+	A+	A+	-
EXCHANGERS							
HEAT EXCHANGER USER SIDE IN REFRIGERATION							
Water flow	(1)	l/s	1,63	2,09	2,88	3,65	4,39
Pressure drop	(1)	kPa	8,10	9,21	11,0	14,5	18,2
HEAT EXCHANGER USER SIDE IN HEATING							
Water flow	(3)	l/s	1,83	2,48	3,32	4,10	4,92
Pressure drop	(3)	kPa	10,2	12,9	14,6	18,3	22,9
REFRIGERANT CIRCUIT							
Compressors nr.		N°	2	2	2	2	2
No. Circuits		N°	2	2	2	2	2
Refrigerant charge		kg	18,0	26,0	30,0	33,0	40,0
NOISE LEVEL							
Sound power level in cooling	(6)(7)	dB(A)	84	86	87	87	87
Sound power level in heating	(6)(8)	dB(A)	84	86	87	87	87
Sound Pressure	(9)	dB(A)	67	69	70	69	69
SIZE AND WEIGHT							
A	(10)	mm	1695	2195	2745	2745	2745
B	(10)	mm	1120	1120	1120	1120	1120
H	(10)	mm	1465	1465	1465	1665	1665
Operating weight	(10)	kg	510	750	870	940	1030

Notes:
1 Plant (side) cooling exchanger water (in/out) 12°C/7°C; Source (side) heat exchanger air (in) 35°C.
2 Values in compliance with EN14511-3:2013.
3 Plant (side) heat exchanger water (in/out) 40°C/45°C; Source (side) heat exchanger air (in) 7°C - 87% R.H.
4 Seasonal space heating energy efficiency class LOW TEMPERATURE in AVERAGE climate conditions [REGULATION (EU) N. 813/2013]
5 Seasonal space heating energy efficiency class MEDIA TEMPERATURE in AVERAGE climate conditions [REGULATION (EU) N. 813/2013]
6 Sound power on the basis of measurements made in compliance with ISO 9614.
7 Sound power level in cooling, outdoors.
8 Sound power level in heating, outdoors.
9 Average sound pressure level at 1m distance, unit in a free field on a reflective surface; non-binding value calculated from the sound power level.
10 Unit in standard configuration/execution, without optional accessories.
11 Seasonal energy efficiency of the cooling environment [REGULATION (EU) N. 2016/2281]
12 Seasonal space heating energy index
13 Seasonal energy efficiency of the space cooling
14 Seasonal performance coefficient
15 Seasonal space heating energy efficiency
The units highlighted in this publication contain HFC R407C [GWP_{100} 1774] fluorinated greenhouse gases.
Certified data in EUROVENT

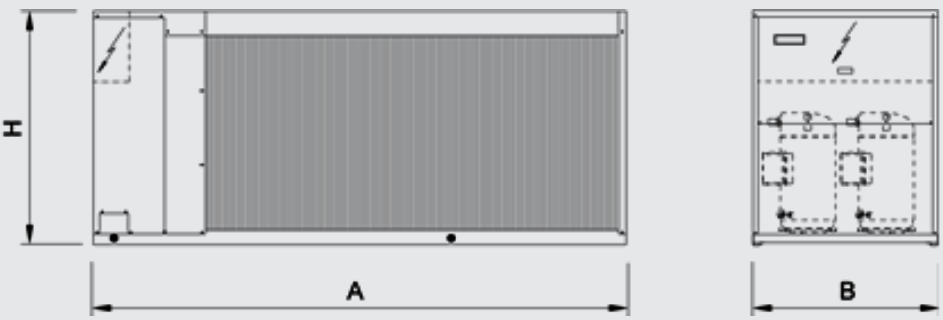

HEAT PUMPS

AWR-HT 0404 - 0604

High efficiency reversible heat pump, air source for outdoor installation, high water temperature 116-181 kW



Version	
CA-E	Premium efficiency version: Class A enhanced
LN-CA-E	Premium efficiency version, Class A enhanced, low-noise

Configurations	
-	Basic function
D	Partial condensing heat recovery function

Features

PREMIUM ´CLASS A' EFFICIENCY

The full range is available with a premium efficiency rating, over the Class A (in heating). AWR-HT/CA-E and AWR-HT/LN-CA-E guaranty premium levels of efficiency and quietness, making this range the best solution for both residential and light commercial markets.

WIDE OPERATING RANGE

Production of high temperature hot water up to 65°C for space heating and sanitary purposes. The unit can operate as standard down to -20°C outdoor temperature.

MAXIMUM RELIABILITY

AW(R)-HT offer maximum operating reliability, thanks to their two main features:
- two independent circuits for all sizes;
- system to prevent formation of ice on the coil, ensuring shorter and more efficient defrost cycles.

RENEWABLE ENERGY FOR COMMERCIAL INSTALLATIONS

Best solution in centralised residential systems such as apartment buildings, where the cost of renovation needs to be limited by keeping the same distribution system with radiators, while offering a source of renewable energy.

MODULAR CONFIGURATION

Modular configuration with capacity extension up to 1000 kW for medium- and high-capacity installations. Ability of managing different thermal loads according to the requirements of both heating and the domestic hot water systems.

AWR-HT represent the best solution for systems in which there is the need to combine both high temperature water for space heating and sanitary purposes, as well as air conditioning. With this solution the space heating can be easily provided by using radiators, so without any major changes on the already existing distribution system available on site. The EVI technology compressor with additional steam injection in the compressing cycle assures a water temperature of 65°C and operating limits as low as -20°C. Neither probes nor connections pipes to wells are needed; the installation is simple, this is a suitable solution for all applications.

Controls

W3000SE

The W3000SE controller is the new device designed especially for heat pump applications with incorporated logic for high temperature hot water production. The keypad features function controls and a complete LCD display for viewing data and activating the unit, via a multilevel menu, with settable display language. The controller provides temperature control for the heating and cooling systems in the air-conditioned rooms, as well as for domestic hot water. These different temperatures are managed automatically based on the different conditions in which the system operates, with the possibility to assign specific levels of priority to domestic hot water production, depending on the needs of the application. Diagnostics include complete alarm management, with “blackbox” functions (via PC) and alarm log (display or PC) for best analysis of unit be haviour. For systems made up of multiple units, differentiated device management means just a certain portion of the capacity installed can be dedicated to domestic water production, in this way ensuring more efficient energy distribution and, at the same time, guaranteeing simultaneous water delivery to the different distribution systems. The built-in clock can be used to create an operating profile containing up to 4 typical days and 10 time bands, essential for efficient programming of energy production, and fundamental for managing the Legionella prevention cycles. Defrosts use proprietary self-adaptive logic involving monitoring of multiple operating and climate parameters. This reduces the number and duration of defrosts, consequently increasing overall energy efficiency. Supervision is available with different options, using proprietarydevices or by integration into third party systems using ModBus, BACnet, BACnet-over-IP and Echelon LonWorks protocols. A dedicated wall-mounted keypad can be used for remote control of all the functions.



AWR-HT / CA-E			0404	0524	0604
Power supply		V/ph/Hz	400/3/50	400/3/50	400/3/50
COOLING ONLY (GROSS VALUE)					
Cooling capacity	(1)	kW	120	146	181
Total power input	(1)	kW	43,8	53,3	65,8
EER	(1)	kW/kW	2,73	2,75	2,75
ESEER	(1)	kW/kW	3,34	3,42	3,31
COOLING ONLY (EN14511 VALUE)					
Cooling capacity	(1)(2)	kW	119	146	181
EER	(1)(2)	kW/kW	2,70	2,72	2,72
ESEER	(1)(2)	kW/kW	3,25	3,33	3,23
Cooling energy class			C	C	C
HEATING ONLY (GROSS VALUE)					
Total heating capacity	(3)	kW	135	171	205
Total power input	(3)	kW	39,6	48,1	58,9
COP	(3)	kW/kW	3,41	3,56	3,48
HEATING ONLY (EN14511 VALUE)					
Total heating capacity	(3)(2)	kW	135	172	206
COP	(3)(2)	kW/kW	3,38	3,52	3,45
Cooling energy class			A	A	A
ENERGY EFFICIENCY					
SEASONAL EFFICIENCY IN COOLING (Reg. EU 2016/2281)					
Ambient refrigeration					
Prated,c	(11)	kW	-	-	-
SEER	(11)(12)		-	-	-
Performance ηs	(11)(13)	%	-	-	-
SEASONAL EFFICIENCY IN HEATING (Reg. EU 813/2013)					
PDesign	(4)	kW	92,6	117	139
SCOP	(4)(14)		3,23	3,40	3,29
Performance ηs	(4)(15)	%	126	133	129
Seasonal efficiency class	(4)		-	-	-
PDesign	(5)	kW	98,9	126	148
SCOP	(5)(14)		3,02	3,19	3,08
Performance ηs	(5)(15)	%	118	125	120
Seasonal efficiency class	(5)		-	-	-
EXCHANGERS					
HEAT EXCHANGER USER SIDE IN REFRIGERATION					
Water flow	(1)	l/s	5,72	7,01	8,67
Pressure drop	(1)	kPa	19,6	20,6	24,0
HEAT EXCHANGER USER SIDE IN HEATING					
Water flow	(3)	l/s	6,51	8,25	9,89
Pressure drop	(3)	kPa	25,4	28,6	31,3
REFRIGERANT CIRCUIT					
Compressors nr.		N°	4	4	4
No. Circuits		N°	2	2	2
Refrigerant charge		kg	66,0	108	108
NOISE LEVEL					
Sound power level in cooling	(6)(7)	dB(A)	92	93	94
Sound power level in heating	(6)(8)	dB(A)	92	93	94
Sound Pressure	(9)	dB(A)	73	73	74
SIZE AND WEIGHT					
A	(10)	mm	3110	4110	4110
B	(10)	mm	2220	2220	2220
H	(10)	mm	2150	2150	2150
Operating weight	(10)	kg	1950	2400	2530

Notes:
1 Plant (side) cooling exchanger water (in/out) 12°C/7°C; Source (side) heat exchanger air (in) 35°C.
2 Values in compliance with EN14511-3:2013.
3 Plant (side) heat exchanger water (in/out) 40°C/45°C; Source (side) heat exchanger air (in) 7°C - 87% R.H.
4 Seasonal space heating energy efficiency class LOW TEMPERATURE in AVERAGE climate conditions [REGULATION (EU) N. 813/2013]
5 Seasonal space heating energy efficiency class MEDIA TEMPERATURE in AVERAGE climate conditions [REGULATION (EU) N. 813/2013]
6 Sound power on the basis of measurements made in compliance with ISO 9614.
7 Sound power level in cooling, outdoors.
8 Sound power level in heating, outdoors.
9 Average sound pressure level at 1m distance, unit in a free field on a reflective surface; non-binding value calculated from the sound power level.
10 Unit in standard configuration/execution, without optional accessories.
11 Seasonal energy efficiency of the cooling environment [REGULATION (EU) N. 2016/2281]
12 Seasonal space heating energy index
13 Seasonal energy efficiency of the space cooling
14 Seasonal performance coefficient
15 Seasonal space heating energy efficiency
The units highlighted in this publication contain HFC R407C [GWP_{100} 1774] fluorinated greenhouse gases.
Certified data in EUROVENT

AWR-HT / LN-CA-E			0404	0524	0604
Power supply		V/ph/Hz	400/3/50	400/3/50	400/3/50
COOLING ONLY (GROSS VALUE)					
Cooling capacity	(1)	kW	116	145	176
Total power input	(1)	kW	42,0	52,2	63,2
EER	(1)	kW/kW	2,77	2,77	2,78
ESEER	(1)	kW/kW	3,39	3,47	3,37
COOLING ONLY (EN14511 VALUE)					
Cooling capacity	(1)(2)	kW	116	144	175
EER	(1)(2)	kW/kW	2,74	2,74	2,75
ESEER	(1)(2)	kW/kW	3,31	3,37	3,28
Cooling energy class			C	C	C
HEATING ONLY (GROSS VALUE)					
Total heating capacity	(3)	kW	135	171	205
Total power input	(3)	kW	39,6	48,1	58,9
COP	(3)	kW/kW	3,41	3,56	3,48
HEATING ONLY (EN14511 VALUE)					
Total heating capacity	(3)(2)	kW	135	172	206
COP	(3)(2)	kW/kW	3,38	3,52	3,45
Cooling energy class			A	A	A
ENERGY EFFICIENCY					
SEASONAL EFFICIENCY IN COOLING (Reg. EU 2016/2281)					
Ambient refrigeration					
Prated,c	(11)	kW	-	-	-
SEER	(11)(12)		-	-	-
Performance ηs	(11)(13)	%	-	-	-
SEASONAL EFFICIENCY IN HEATING (Reg. EU 813/2013)					
PDesign	(4)	kW	92,6	117	139
SCOP	(4)(14)		3,23	3,40	3,29
Performance ηs	(4)(15)	%	126	133	129
Seasonal efficiency class	(4)		-	-	-
PDesign	(5)	kW	98,9	126	148
SCOP	(5)(14)		3,02	3,19	3,08
Performance ηs	(5)(15)	%	118	125	120
Seasonal efficiency class	(5)		-	-	-
EXCHANGERS					
HEAT EXCHANGER USER SIDE IN REFRIGERATION					
Water flow	(1)	l/s	5,56	6,92	8,41
Pressure drop	(1)	kPa	18,5	20,1	22,6
HEAT EXCHANGER USER SIDE IN HEATING					
Water flow	(3)	l/s	6,51	8,25	9,89
Pressure drop	(3)	kPa	25,4	28,6	31,3
REFRIGERANT CIRCUIT					
Compressors nr.		N°	4	4	4
No. Circuits		N°	2	2	2
Refrigerant charge		kg	66,0	108	108
NOISE LEVEL					
Sound power level in cooling	(6)(7)	dB(A)	86	86	87
Sound power level in heating	(6)(8)	dB(A)	88	88	89
Sound Pressure	(9)	dB(A)	67	66	67
SIZE AND WEIGHT					
A	(10)	mm	3110	4110	4110
B	(10)	mm	2220	2220	2220
H	(10)	mm	2150	2150	2150
Operating weight	(10)	kg	1960	2410	2540

Notes:
1 Plant (side) cooling exchanger water (in/out) 12°C/7°C; Source (side) heat exchanger air (in) 35°C.
2 Values in compliance with EN14511-3:2013.
3 Plant (side) heat exchanger water (in/out) 40°C/45°C; Source (side) heat exchanger air (in) 7°C - 87% R.H.
4 Seasonal space heating energy efficiency class LOW TEMPERATURE in AVERAGE climate conditions [REGULATION (EU) N. 813/2013]
5 Seasonal space heating energy efficiency class MEDIA TEMPERATURE in AVERAGE climate conditions [REGULATION (EU) N. 813/2013]
6 Sound power on the basis of measurements made in compliance with ISO 9614.
7 Sound power level in cooling, outdoors.
8 Sound power level in heating, outdoors.
9 Average sound pressure level at 1m distance, unit in a free field on a reflective surface; non-binding value calculated from the sound power level.
10 Unit in standard configuration/execution, without optional accessories.
11 Seasonal energy efficiency of the cooling environment [REGULATION (EU) N. 2016/2281]
12 Seasonal space heating energy index
13 Seasonal energy efficiency of the space cooling
14 Seasonal performance coefficient
15 Seasonal space heating energy efficiency
The units highlighted in this publication contain HFC R407C [GWP_{100} 1774] fluorinated greenhouse gases.
Certified data in EUROVENT

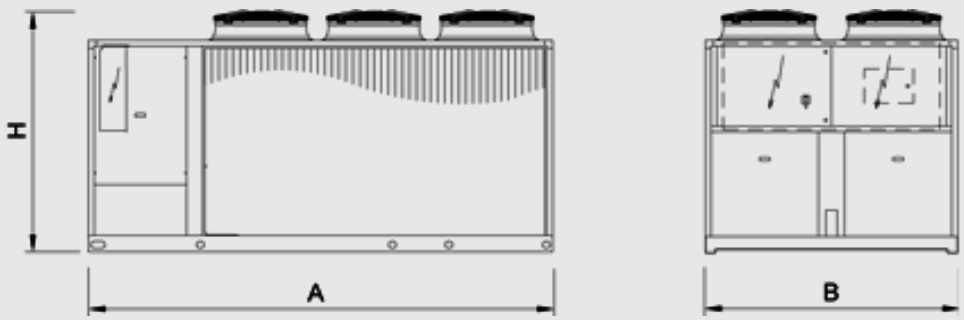

HEAT PUMPS

MICS-N FFT 0072 - 0182

Modular reversible unit, air source for outdoor installation 17,3-42,5 kW



Version

FFT Basic version without hydronic kit

Features

Structure and base in hot-dip galvanised steel with epoxy powder paint finish.
High efficiency, low pressure drop AISI 316 stainless steel plate heat exchangers, fitted with heating element to provide frost protection.
External access to control with anti-tamper device.
Finned coils made with copper pipes and aluminium fins with large exchange surface area, tested for leaks with dried air at 30 bar.
User interface with display.
Electronic expansion valve
Available water pipe fittings in case of installation under appliance
Differential pressure switch.
Air vent valve
The hydronic circuit on the FF models includes:
- Multistage centrifugal pump
- Expansion tank
- Safety valve
- Pressure gauge
- Drain valve.

Accessory

- Remote control kit
- Kit for connecting the KMC keyboard
- KMC keyboard for modular system
- Coil protection grids
- Removable metal mesh water filter kit
- Rubber anti-vibration mounting kit

MICS-N is the Climaveneta range of reversible air-cooled heat pumps. They are outdoor units with axial fans, hermetic Scroll compressors and Full Floating technology. The latter is an intelligent electronic unit providing the perfect answer to residential market requirements: compactness, ease of installation and quietness.

Controls

Keyboard Master Control
MICS features an innovative design that optimises the possibilities of connecting up several units, reducing the necessary access space to a minimum and thereby the overall size of the units.
Increasingly better capacity control
The possibility of controlling up to six units as a single product means that MICS can increase the number of available control steps, thereby ensuring practically perfect adaptation to the real heat load trend.
Modular design
KMC is the central control of the cascade modules. Its main function is to supervise operation of all the modules, making them operate synergically. As a user interface it has a graphic display and a keypad for navigating in the pull-down menus.
Full Floating technology
The full floating technology with automatic control of the airflow rate, water flow rate and water temperature gains a new function: Flex Energy, used to manage the capacity control steps in linear or alternating sequence in installations with several modules.

MICS-N FFT			0072	0092	0122	0152	0182
Power supply		V/ph/Hz	400/3/50	400/3/50	400/3/50	400/3/50	400/3/50
COOLING ONLY (GROSS VALUE)							
Cooling capacity	(1)	kW	17,3	21,8	30,3	37,4	42,5
Total power input	(1)	kW	6,50	9,30	10,7	13,4	15,5
EER	(1)	kW/kW	2,66	2,34	2,83	2,79	2,74
ESEER	(1)	kW/kW	3,86	3,75	3,78	3,92	3,96
COOLING ONLY (EN14511 VALUE)							
Cooling capacity	(1)(2)	kW	17,2	21,7	30,1	37,2	42,2
EER	(1)(2)	kW/kW	2,60	2,30	2,76	2,73	2,68
ESEER	(1)(2)	kW/kW	3,67	3,58	3,60	3,74	3,76
HEATING ONLY (GROSS VALUE)							
Total heating capacity	(3)	kW	20,2	26,1	33,9	42,6	47,9
Total power input	(3)	kW	6,50	8,60	11,2	14,0	15,4
COP	(3)	kW/kW	3,11	3,03	3,03	3,04	3,11
HEATING ONLY (EN14511 VALUE)							
Total heating capacity	(2)(3)	kW	20,4	26,3	34,1	42,9	48,3
COP	(2)(3)	kW/kW	3,06	2,99	2,98	3,00	3,06
ENERGY EFFICIENCY							
SEASONAL EFFICIENCY IN COOLING (Reg. EU 2016/2281)							
Ambient refrigeration							
Prated,c	(10)	kW	-	-	-	-	-
SEER	(10)(11)		-	-	-	-	-
Performance ηs	(10)(12)	%	-	-	-	-	-
SEASONAL EFFICIENCY IN HEATING (Reg. EU 813/2013)							
PDesign	(4)	kW	14,9	18,3	30,6	31,2	34,0
SCOP	(4)(13)		3,38	3,45	3,26	3,39	3,43
Performance ηs	(4)(14)	%	132	135	127	133	134
Seasonal efficiency class	(4)		A+	A+	A+	A+	A+
EXCHANGERS							
HEAT EXCHANGER USER SIDE IN REFRIGERATION							
Water flow	(1)	l/s	0,83	1,04	1,45	1,79	2,03
Pressure drop	(1)	kPa	26,4	25,4	32,7	32,3	40,7
HEAT EXCHANGER USER SIDE IN HEATING							
Water flow	(3)	l/s	0,98	1,26	1,64	2,06	2,31
Pressure drop	(3)	kPa	36,7	37,0	41,6	42,7	52,7
REFRIGERANT CIRCUIT							
Compressors nr.		N°	2	2	2	2	2
No. Circuits		N°	1	1	1	1	1
Refrigerant charge		kg	6,60	6,90	11,0	13,3	14,5
NOISE LEVEL							
Sound power level in cooling	(5)(6)	dB(A)	80	80	83	83	83
Sound power level in heating	(5)(7)	dB(A)	78	78	83	83	83
Sound Pressure	(8)	dB(A)	64	64	66	66	66
SIZE AND WEIGHT							
A	(9)	mm	1040	1040	1630	1630	1630
B	(9)	mm	790	790	790	790	790
H	(9)	mm	1725	1725	1725	1725	1725
Operating weight	(9)	kg	330	350	440	480	510

Notes:
1 Plant (side) cooling exchanger water (in/out) 12°C/7°C; Source (side) heat exchanger air (in) 35°C.
2 Values in compliance with EN14511-3:2013.
3 Plant (side) heat exchanger water (in/out) 40°C/45°C; Source (side) heat exchanger air (in) 7°C - 87% R.H.
4 Seasonal space heating energy efficiency class LOW TEMPERATURE in AVERAGE climate conditions [REGULATION (EU) N. 813/2013]
5 Sound power on the basis of measurements made in compliance with ISO 9614.
6 Sound power level in cooling, outdoors.
7 Sound power level in heating, outdoors.
8 Average sound pressure level at 1m distance, unit in a free field on a reflective surface; non-binding value calculated from the sound power level.
9 Unit in standard configuration/execution, without optional accessories.
10 Seasonal energy efficiency of the cooling environment [REGULATION (EU) N. 2016/2281]
11 Seasonal space heating energy index
12 Seasonal energy efficiency of the space cooling
13 Seasonal performance coefficient
14 Seasonal space heating energy efficiency
The units highlighted in this publication contain HFC R410A [GWP_{100} 2088] fluorinated greenhouse gases.

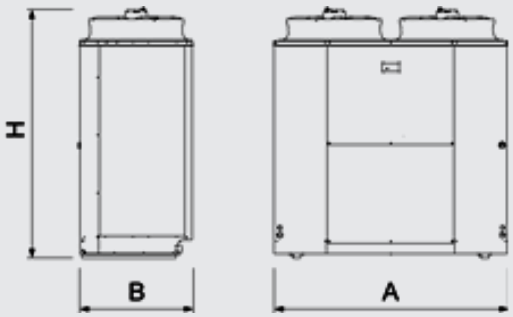

HEAT PUMPS

NX-N 0152P - 0812P

Reversible unit, air source for outdoor installation
35,8-219 kW



Outdoor unit with heat pump for the production of chilled/hot water with hermetic rotary scroll compressors dedicated to the use of R410A, axial fans, plate heat exchanger, condensing coil with copper tubes and aluminum fins and thermostatic or electronic expansion valve, according to the version. The range is composed by units equipped with two compressors in a single-circuit configuration.

Version

K	Key efficiency, compact version
LN-K	Low Noise, Key efficiency and compact version
CA	Class A of efficiency
LN-CA	Low Noise, Class A of efficiency

Configurations

-	Basic function
D	Partial condensing heat recovery function

Features

REFRIGERANT GAS R410A

The use of R410A allowed to achive better energy efficiencies with environment full respect (ODP = 0)

ELECTRONIC EXPANSION VALVE

The use of the electronic expansion valve generates considerable benefits, especially in cases of variable demand and different external conditions. It has been introduced into these units as a result of accurate design choices concerning the cooling circuit and the optimisation of operation in various different working conditions. The electronic expansion valve comes standard in the high-efficieny CA version.

CLASS A EFFICIENCY

The full range is also available with the Class A efficiency rating (in heating). NX-N/CA guaranties within all the noise configurations premium levels of efficiency thanks to the generous sizing of the refrigerant-exchange surface areas and to an accurate control of the fans.

WIDE OPERATING RANGE

Unit´s operation guaranteed with external air temperature down to -10 °C during winter and up to 46 °C during summer.

COMPLIANCE WITH THE STRICTEST EUROPEAN STANDARDS

The main new feature that distinguishes the new NX-N units regards the calculation methods used to define the energy efficiency values.
These values are in fact now calculated not only based on the capacity delivered and power consumed by the unit, but also taking into account heat exchanger pressure drop, or the available pressure head if the unit is installed with pumps, as required by European standard EN14511.
In this way, energy efficiency is no longer an index for evaluating the unit alone, but rather extends the assessment by considering the unit within the system, consequently taking into account the energy required to pump the refrigerant or heat carrier fluid used in the system.

TWO SOUND EMISSION LEVELS

The new NX-N appliances have two different sound emission levels. This means the best unit can be identified based on requirements, according to the system where it will be installed and the application.

INTEGRATED HYDRONIC GROUP

The optional built-in hydronic module already contains the main water circuit components; it is available with single or twin in-line, for achieving both low or high head.

Accessory

- Soft starters
- Set-up for remote connectivity with ModBus/Echelon protocol cards
- Remote control keyboard (distance to 200m and to 500m)

Controls

W3000 Base – W3000SE Compact

The controller in two different versions according to the unit's type:
W3000 Base: electronic controller complete with keypad features an easy-to-use interface and a complete LCD display, allowing to consult and intervene on the unit by means of a menu up to three languages (Italian and English come standard, a further language can be chosen within French, Spanish, German, Russian and Swedish)
W3000SE Compact: electronic controller complete with keypad features an easy-to-use interface and a complete LCD display, allowing to consult and intervene on the unit by means of a multi-language menu, with selectable language setting on site. This controller also includes an internal clock.
All the W3000 electronic controllers offer advanced functions and algorithms.
The keypad features an easy-to-use interface and a complete LCD display, allowing to consult and intervene on the unit by means of a multi-level menu, with selectable language setting.
The regulation is based on the exclusive QuickMind algorithm, including self-adaptive control logics, beneficial in low water content systems. As alternatives the proportional- or proportional- integral regulations are also available.
The diagnostics includes a complete alarm management, with the "black-box" and alarm logging functions for enhanced analysis of the unit operation (available on W3000SE Compact only).
For multiple units' systems, the regulation of the resources, via optional proprietary devices, can be implemented. Energy metering, for both consumption and capacity, can also be developed.
Supervision can be easily developed via proprietary devices or the integration in third party systems by means of the most common protocols as ModBus, Bacnet, Bacnet-over-IP, Echelon LonWorks.
Compatibility with the remote keyboard managing up to 10 units.
The internal real time clock allows to manage a weekly schedule operating on 4-day profiles with 10 hour belts (available on W3000SE Compact only, optional on W3000 Base controller).
The defrost adopts a proprietary self-adaptive logic, which features the monitoring of numerous operational parameters.
This allows to reduce the number and duration of the defrost cycles, with a benefit for the overall energy efficiency.



NX-N /K			0152P	0182P	0202P	0252P	0262P	0302P	0352P
Power supply		V/ph/Hz	400/3+N/50	400/3+N/50	400/3+N/50	400/3+N/50	400/3+N/50	400/3+N/50	400/3+N/50
PERFORMANCE									
COOLING ONLY (GROSS VALUE)									
Cooling capacity	(1)	kW	38,7	43,8	51,0	58,3	64,6	74,1	84,4
Total power input	(1)	kW	13,7	15,8	18,4	20,5	23,3	28,2	32,1
EER	(1)	kW/kW	2,82	2,77	2,77	2,84	2,77	2,63	2,63
ESEER	(1)	kW/kW	4,01	4,03	4,18	3,94	3,96	3,89	4,03
COOLING ONLY (EN14511 VALUE)									
Cooling capacity	(1)(2)	kW	38,5	43,5	50,7	58,0	64,3	73,8	83,9
EER	(1)(2)	kW/kW	2,76	2,71	2,71	2,79	2,72	2,58	2,57
ESEER	(1)(2)	kW/kW	3,83	3,85	4,00	3,78	3,82	3,77	3,84
Cooling energy class			C	C	C	C	C	D	D
HEATING ONLY (GROSS VALUE)									
Total heating capacity	(3)	kW	42,9	47,4	55,3	65,0	70,7	80,1	92,1
Total power input	(3)	kW	14,0	15,5	18,0	21,3	22,8	26,0	29,6
COP	(3)	kW/kW	3,06	3,06	3,07	3,05	3,10	3,08	3,11
HEATING ONLY (EN14511 VALUE)									
Total heating capacity	(3)(2)	kW	43,2	47,7	55,6	65,4	71,1	80,5	92,7
COP	(3)(2)	kW/kW	3,02	3,02	3,03	3,02	3,07	3,05	3,07
Cooling energy class			B	B	B	B	B	B	B
ENERGY EFFICIENCY									
SEASONAL EFFICIENCY IN COOLING (Reg. EU 2016/2281)									
Ambient refrigeration									
Prated,c	(10)	kW	-	-	-	-	-	-	-
SEER	(10)(11)		-	-	-	-	-	-	-
Performance ηs	(10)(12)	%	-	-	-	-	-	-	-
SEASONAL EFFICIENCY IN HEATING (Reg. EU 813/2013)									
PDesign	(4)	kW	31,0	34,3	42,1	47,9	51,8	59,1	72,2
SCOP	(4)(13)		3,42	3,42	3,55	3,40	3,44	3,42	3,55
Performance ηs	(4)(14)	%	134	134	139	133	135	134	139
Seasonal efficiency class	(4)		A+	A+	A+	A+	A+	A+	-
EXCHANGERS									
HEAT EXCHANGER USER SIDE IN REFRIGERATION									
Water flow	(1)	l/s	1,85	2,09	2,44	2,79	3,09	3,54	4,04
Pressure drop	(1)	kPa	35,4	33,3	35,0	32,8	32,8	30,9	49,2
HEAT EXCHANGER USER SIDE IN HEATING									
Water flow	(3)	l/s	2,07	2,29	2,67	3,14	3,41	3,87	4,45
Pressure drop	(3)	kPa	44,2	39,8	42,0	41,5	40,0	36,8	59,7
REFRIGERANT CIRCUIT									
Compressors nr.		N°	2	2	2	2	2	2	2
No. Circuits		N°	1	1	1	1	1	1	1
Refrigerant charge		kg	12,6	14,0	15,8	16,7	16,9	17,0	25,5
NOISE LEVEL									
Sound Pressure	(5)	dB(A)	67	67	67	67	67	67	68
Sound power level in cooling	(6)(7)	dB(A)	84	84	84	85	85	85	86
Sound power level in heating	(6)(8)	dB(A)	84	84	84	85	85	85	86
SIZE AND WEIGHT									
Operating weight	(9)	kg	510	550	570	640	650	660	790
A	(9)	mm	1825	1825	1825	2395	2395	2395	2395
B	(9)	mm	1195	1195	1195	1195	1195	1195	1195
H	(9)	mm	1865	1865	1865	1865	1865	1865	1865

Notes:
1 Plant (side) cooling exchanger water (in/out) 12°C/7°C; Source (side) heat exchanger air (in) 35°C.
2 Values in compliance with EN14511-3:2013.
3 Plant (side) heat exchanger water (in/out) 40°C/45°C; Source (side) heat exchanger air (in) 7°C - 87% R.H.
4 Seasonal space heating energy efficiency class LOW TEMPERATURE in AVERAGE climate conditions [REGULATION (EU) N. 813/2013]
5 Average sound pressure level at 1m distance, unit in a free field on a reflective surface; non-binding value calculated from the sound power level.
6 Sound power on the basis of measurements made in compliance with ISO 9614.
7 Sound power level in cooling, outdoors.
8 Sound power level in heating, outdoors.
9 Unit in standard configuration/execution, without optional accessories.
10 Seasonal energy efficiency of the cooling environment [REGULATION (EU) N. 2016/2281]
11 Seasonal space heating energy index
12 Seasonal energy efficiency of the space cooling
13 Seasonal performance coefficient
14 Seasonal space heating energy efficiency
The units highlighted in this publication contain HFC R410A [GWP_{100} 2088] fluorinated greenhouse gases.

NX-N /K			0402P	0452P	0502P	0552P	0602P	0702P	0802P
Power supply		V/ph/Hz	400/3/50	400/3/50	400/3/50	400/3/50	400/3/50	400/3/50	400/3/50
PERFORMANCE									
COOLING ONLY (GROSS VALUE)									
Cooling capacity	(1)	kW	100	113	125	138	162	180	199
Total power input	(1)	kW	35,7	40,7	45,2	52,3	58,2	67,6	77,7
EER	(1)	kW/kW	2,81	2,76	2,77	2,64	2,78	2,66	2,56
ESEER	(1)	kW/kW	3,73	3,82	3,87	3,87	3,78	3,80	3,69
COOLING ONLY (EN14511 VALUE)									
Cooling capacity	(1)(2)	kW	99,6	112	124	138	161	179	198
EER	(1)(2)	kW/kW	2,75	2,71	2,71	2,59	2,73	2,62	2,51
ESEER	(1)(2)	kW/kW	3,58	3,67	3,74	3,72	3,65	3,67	3,56
Cooling energy class			C	C	C	D	C	D	D
HEATING ONLY (GROSS VALUE)									
Total heating capacity	(3)	kW	108	119	134	150	175	193	211
Total power input	(3)	kW	35,5	39,2	42,9	48,6	57,0	63,2	69,5
COP	(3)	kW/kW	3,05	3,05	3,12	3,09	3,06	3,06	3,04
HEATING ONLY (EN14511 VALUE)									
Total heating capacity	(3)(2)	kW	109	120	135	151	176	194	213
COP	(3)(2)	kW/kW	3,01	3,01	3,08	3,05	3,03	3,03	3,01
Cooling energy class			B	B	B	B	B	B	B
ENERGY EFFICIENCY									
SEASONAL EFFICIENCY IN COOLING (Reg. EU 2016/2281)									
Ambient refrigeration									
Prated,c	(10)	kW	-	-	-	-	-	-	-
SEER	(10)(11)		-	-	-	-	-	-	-
Performance ηs	(10)(12)	%	-	-	-	-	-	-	-
SEASONAL EFFICIENCY IN HEATING (Reg. EU 813/2013)									
PDesign	(4)	kW	80,1	92,5	103	119	133	157	183
SCOP	(4)(13)		3,22	3,23	3,26	3,36	3,24	3,28	3,22
Performance ηs	(4)(14)	%	126	126	127	131	126	128	126
Seasonal efficiency class	(4)		-	-	-	-	-	-	-
EXCHANGERS									
HEAT EXCHANGER USER SIDE IN REFRIGERATION									
Water flow	(1)	l/s	4,79	5,38	5,98	6,61	7,74	8,59	9,51
Pressure drop	(1)	kPa	48,2	49,5	47,2	47,9	47,0	44,8	54,8
HEAT EXCHANGER USER SIDE IN HEATING									
Water flow	(3)	l/s	5,23	5,77	6,47	7,24	8,43	9,33	10,20
Pressure drop	(3)	kPa	57,3	56,9	55,3	57,5	55,8	52,8	63,2
REFRIGERANT CIRCUIT									
Compressors nr.		N°	2	2	2	2	2	2	2
No. Circuits		N°	1	1	1	1	1	1	1
Refrigerant charge		kg	31,9	35,8	44,3	45,3	48,8	49,8	52,5
NOISE LEVEL									
Sound Pressure	(5)	dB(A)	70	70	70	72	71	71	72
Sound power level in cooling	(6)(7)	dB(A)	88	88	88	90	90	90	91
Sound power level in heating	(6)(8)	dB(A)	88	88	88	90	90	90	91
SIZE AND WEIGHT									
Operating weight	(9)	kg	970	1020	1150	1210	1330	1360	1380
A	(9)	mm	2825	2825	3360	3360	3980	3980	3980
B	(9)	mm	1195	1195	1195	1195	1195	1195	1195
H	(9)	mm	1980	1980	1980	1980	1980	1980	1980

Notes:
1 Plant (side) cooling exchanger water (in/out) 12°C/7°C; Source (side) heat exchanger air (in) 35°C.
2 Values in compliance with EN14511-3:2013.
3 Plant (side) heat exchanger water (in/out) 40°C/45°C; Source (side) heat exchanger air (in) 7°C - 87% R.H.
4 Seasonal space heating energy efficiency class LOW TEMPERATURE in AVERAGE climate conditions [REGULATION (EU) N. 813/2013]
5 Average sound pressure level at 1m distance, unit in a free field on a reflective surface; non-binding value calculated from the sound power level.
6 Sound power on the basis of measurements made in compliance with ISO 9614.
7 Sound power level in cooling, outdoors.
8 Sound power level in heating, outdoors.
9 Unit in standard configuration/execution, without optional accessories.
10 Seasonal energy efficiency of the cooling environment [REGULATION (EU) N. 2016/2281]
11 Seasonal space heating energy index
12 Seasonal energy efficiency of the space cooling
13 Seasonal performance coefficient
14 Seasonal space heating energy efficiency
The units highlighted in this publication contain HFC R410A [GWP_{100} 2088] fluorinated greenhouse gases.
Certified data in EUROVENT

NX-N /LN-K			0152P	0182P	0202P	0252P	0262P	0302P	0352P
Power supply		V/ph/Hz	400/3+N/50	400/3+N/50	400/3+N/50	400/3+N/50	400/3+N/50	400/3+N/50	400/3+N/50
PERFORMANCE									
COOLING ONLY (GROSS VALUE)									
Cooling capacity	(1)	kW	35,8	39,8	46,8	53,4	60,4	69,9	77,9
Total power input	(1)	kW	15,2	17,6	19,9	22,4	25,8	29,9	34,9
EER	(1)	kW/kW	2,36	2,26	2,35	2,38	2,34	2,34	2,23
ESEER	(1)	kW/kW	3,91	3,75	4,07	3,82	3,84	3,85	3,92
COOLING ONLY (EN14511 VALUE)									
Cooling capacity	(1)(2)	kW	35,6	39,6	46,6	53,1	60,1	69,6	77,5
EER	(1)(2)	kW/kW	2,31	2,22	2,31	2,35	2,31	2,30	2,19
ESEER	(1)(2)	kW/kW	3,75	3,62	3,91	3,68	3,71	3,72	3,77
Cooling energy class			E	F	E	E	E	E	F
HEATING ONLY (GROSS VALUE)									
Total heating capacity	(3)	kW	42,9	47,4	55,3	65,0	70,7	80,1	92,1
Total power input	(3)	kW	14,0	15,5	18,0	21,3	22,8	26,0	29,6
COP	(3)	kW/kW	3,06	3,06	3,07	3,05	3,10	3,08	3,11
HEATING ONLY (EN14511 VALUE)									
Total heating capacity	(3)(2)	kW	43,2	47,7	55,6	65,4	71,1	80,5	92,7
COP	(3)(2)	kW/kW	3,02	3,02	3,03	3,02	3,07	3,05	3,07
Cooling energy class			B	B	B	B	B	B	B
ENERGY EFFICIENCY									
SEASONAL EFFICIENCY IN COOLING (Reg. EU 2016/2281)									
Ambient refrigeration									
Prated,c	(10)	kW	-	-	-	-	-	-	-
SEER	(10)(11)		-	-	-	-	-	-	-
Performance ηs	(10)(12)	%	-	-	-	-	-	-	-
SEASONAL EFFICIENCY IN HEATING (Reg. EU 813/2013)									
PDesign	(4)	kW	31,0	34,3	42,1	47,9	51,8	59,1	72,2
SCOP	(4)(13)		3,42	3,42	3,55	3,40	3,44	3,42	3,55
Performance ηs	(4)(14)	%	134	134	139	133	135	134	139
Seasonal efficiency class	(4)		A+	A+	A+	A+	A+	A+	-
EXCHANGERS									
HEAT EXCHANGER USER SIDE IN REFRIGERATION									
Water flow	(1)	l/s	1,71	1,90	2,24	2,56	2,89	3,34	3,73
Pressure drop	(1)	kPa	30,2	27,6	29,4	27,5	28,6	27,5	41,9
HEAT EXCHANGER USER SIDE IN HEATING									
Water flow	(3)	l/s	2,07	2,29	2,67	3,14	3,41	3,87	4,45
Pressure drop	(3)	kPa	44,2	39,8	42,0	41,5	40,0	36,8	59,7
REFRIGERANT CIRCUIT									
Compressors nr.		N°	2	2	2	2	2	2	2
No. Circuits		N°	1	1	1	1	1	1	1
Refrigerant charge		kg	12,6	14,0	15,8	16,7	16,9	17,0	25,5
NOISE LEVEL									
Sound Pressure	(5)	dB(A)	60	60	60	60	61	62	64
Sound power level in cooling	(6)(7)	dB(A)	77	77	77	78	79	80	82
Sound power level in heating	(6)(8)	dB(A)	78	78	78	79	80	81	83
SIZE AND WEIGHT									
Operating weight	(9)	kg	510	560	580	650	660	670	800
A	(9)	mm	1825	1825	1825	2395	2395	2395	2395
B	(9)	mm	1195	1195	1195	1195	1195	1195	1195
H	(9)	mm	1865	1865	1865	1865	1865	1865	1865

Notes:
1 Plant (side) cooling exchanger water (in/out) 12°C/7°C; Source (side) heat exchanger air (in) 35°C.
2 Values in compliance with EN14511-3:2013.
3 Plant (side) heat exchanger water (in/out) 40°C/45°C; Source (side) heat exchanger air (in) 7°C - 87% R.H.
4 Seasonal space heating energy efficiency class LOW TEMPERATURE in AVERAGE climate conditions [REGULATION (EU) N. 813/2013]
5 Average sound pressure level at 1m distance, unit in a free field on a reflective surface; non-binding value calculated from the sound power level.
6 Sound power on the basis of measurements made in compliance with ISO 9614.
7 Sound power level in cooling, outdoors.
8 Sound power level in heating, outdoors.
9 Unit in standard configuration/execution, without optional accessories.
10 Seasonal energy efficiency of the cooling environment [REGULATION (EU) N. 2016/2281]
11 Seasonal space heating energy index
12 Seasonal energy efficiency of the space cooling
13 Seasonal performance coefficient
14 Seasonal space heating energy efficiency
The units highlighted in this publication contain HFC R410A [GWP_{100} 2088] fluorinated greenhouse gases.

NX-N /LN-K			0402P	0452P	0502P	0552P	0602P	0702P	0802P
Power supply		V/ph/Hz	400/3/50	400/3/50	400/3/50	400/3/50	400/3/50	400/3/50	400/3/50
PERFORMANCE									
COOLING ONLY (GROSS VALUE)									
Cooling capacity	(1)	kW	94,5	104	114	132	154	168	180
Total power input	(1)	kW	36,7	42,5	47,8	54,1	60,5	71,6	83,8
EER	(1)	kW/kW	2,57	2,44	2,38	2,43	2,55	2,35	2,14
ESEER	(1)	kW/kW	3,89	3,89	3,85	3,99	3,96	3,91	3,62
COOLING ONLY (EN14511 VALUE)									
Cooling capacity	(1)(2)	kW	94,0	103	113	131	154	168	179
EER	(1)(2)	kW/kW	2,53	2,40	2,35	2,39	2,51	2,32	2,11
ESEER	(1)(2)	kW/kW	3,75	3,75	3,73	3,85	3,82	3,78	3,50
Cooling energy class			D	E	E	E	D	E	F
HEATING ONLY (GROSS VALUE)									
Total heating capacity	(3)	kW	108	119	134	150	175	193	211
Total power input	(3)	kW	35,5	39,2	42,9	48,6	57,0	63,2	69,5
COP	(3)	kW/kW	3,05	3,05	3,12	3,09	3,06	3,06	3,04
HEATING ONLY (EN14511 VALUE)									
Total heating capacity	(3)(2)	kW	109	120	135	151	176	194	213
COP	(3)(2)	kW/kW	3,01	3,01	3,08	3,05	3,03	3,03	3,01
Cooling energy class			B	B	B	B	B	B	B
ENERGY EFFICIENCY									
SEASONAL EFFICIENCY IN COOLING (Reg. EU 2016/2281)									
Ambient refrigeration									
Prated,c	(10)	kW	-	-	-	-	-	-	-
SEER	(10)(11)		-	-	-	-	-	-	-
Performance ηs	(10)(12)	%	-	-	-	-	-	-	-
SEASONAL EFFICIENCY IN HEATING (Reg. EU 813/2013)									
PDesign	(4)	kW	80,1	92,5	103	119	133	157	183
SCOP	(4)(13)		3,31	3,41	3,46	3,51	3,41	3,48	3,38
Performance ηs	(4)(14)	%	130	133	136	137	134	136	132
Seasonal efficiency class	(4)		-	-	-	-	-	-	-
EXCHANGERS									
HEAT EXCHANGER USER SIDE IN REFRIGERATION									
Water flow	(1)	l/s	4,52	4,95	5,45	6,29	7,38	8,05	8,59
Pressure drop	(1)	kPa	42,9	42,0	39,2	43,4	42,8	39,3	44,7
HEAT EXCHANGER USER SIDE IN HEATING									
Water flow	(3)	l/s	5,23	5,77	6,47	7,24	8,43	9,33	10,20
Pressure drop	(3)	kPa	57,3	56,9	55,3	57,5	55,8	52,8	63,2
REFRIGERANT CIRCUIT									
Compressors nr.		N°	2	2	2	2	2	2	2
No. Circuits		N°	1	1	1	1	1	1	1
Refrigerant charge		kg	31,9	35,8	44,3	45,3	48,8	49,8	52,5
NOISE LEVEL									
Sound Pressure	(5)	dB(A)	65	65	65	66	65	65	67
Sound power level in cooling	(6)(7)	dB(A)	83	83	83	84	84	84	86
Sound power level in heating	(6)(8)	dB(A)	84	84	84	85	85	85	87
SIZE AND WEIGHT									
Operating weight	(9)	kg	1010	1100	1200	1250	1360	1410	1430
A	(9)	mm	2825	2825	3360	3360	3980	3980	3980
B	(9)	mm	1195	1195	1195	1195	1195	1195	1195
H	(9)	mm	1980	1980	1980	1980	1980	1980	1980

Notes:
1 Plant (side) cooling exchanger water (in/out) 12°C/7°C; Source (side) heat exchanger air (in) 35°C.
2 Values in compliance with EN14511-3:2013.
3 Plant (side) heat exchanger water (in/out) 40°C/45°C; Source (side) heat exchanger air (in) 7°C - 87% R.H.
4 Seasonal space heating energy efficiency class LOW TEMPERATURE in AVERAGE climate conditions [REGULATION (EU) N. 813/2013]
5 Average sound pressure level at 1m distance, unit in a free field on a reflective surface; non-binding value calculated from the sound power level.
6 Sound power on the basis of measurements made in compliance with ISO 9614.
7 Sound power level in cooling, outdoors.
8 Sound power level in heating, outdoors.
9 Unit in standard configuration/execution, without optional accessories.
10 Seasonal energy efficiency of the cooling environment [REGULATION (EU) N. 2016/2281]
11 Seasonal space heating energy index
12 Seasonal energy efficiency of the space cooling
13 Seasonal performance coefficient
14 Seasonal space heating energy efficiency
The units highlighted in this publication contain HFC R410A [GWP_{100} 2088] fluorinated greenhouse gases.
Certified data in EUROVENT

NX-N /CA			0152P	0182P	0202P	0252P	0262P	0302P	0352P
Power supply		V/ph/Hz	400/3+N/50	400/3+N/50	400/3+N/50	400/3+N/50	400/3+N/50	400/3/50	400/3/50
PERFORMANCE									
COOLING ONLY (GROSS VALUE)									
Cooling capacity	(1)	kW	40,0	45,3	51,2	59,6	66,8	80,9	92,0
Total power input	(1)	kW	13,0	15,0	18,0	19,9	22,5	27,0	30,8
EER	(1)	kW/kW	3,08	3,02	2,84	2,99	2,97	3,00	2,99
ESEER	(1)	kW/kW	4,19	4,24	4,22	4,05	4,12	4,01	4,12
COOLING ONLY (EN14511 VALUE)									
Cooling capacity	(1)(2)	kW	39,7	45,0	50,9	59,3	66,5	80,5	91,4
EER	(1)(2)	kW/kW	3,00	2,95	2,78	2,93	2,91	2,94	2,91
ESEER	(1)(2)	kW/kW	3,97	4,03	4,03	3,88	3,96	3,85	3,89
Cooling energy class			B	B	C	B	B	B	B
HEATING ONLY (GROSS VALUE)									
Total heating capacity	(3)	kW	46,1	51,0	59,0	69,5	74,5	86,8	98,6
Total power input	(3)	kW	14,1	15,5	18,1	21,3	22,9	26,7	30,3
COP	(3)	kW/kW	3,27	3,29	3,26	3,26	3,25	3,25	3,25
HEATING ONLY (EN14511 VALUE)									
Total heating capacity	(3)(2)	kW	46,4	51,3	59,4	69,9	74,9	87,3	99,3
COP	(3)(2)	kW/kW	3,21	3,24	3,21	3,22	3,21	3,21	3,20
Cooling energy class			A	A	A	A	A	A	A
ENERGY EFFICIENCY									
SEASONAL EFFICIENCY IN COOLING (Reg. EU 2016/2281)									
Ambient refrigeration									
Prated,c	(10)	kW	-	-	-	-	-	-	-
SEER	(10)(11)		-	-	-	-	-	-	-
Performance ηs	(10)(12)	%	-	-	-	-	-	-	-
SEASONAL EFFICIENCY IN HEATING (Reg. EU 813/2013)									
PDesign	(4)	kW	33,5	37,2	43,9	51,5	55,6	64,9	73,1
SCOP	(4)(13)		3,77	3,77	3,89	3,76	3,76	3,55	3,56
Performance ηs	(4)(14)	%	148	148	153	147	147	139	140
Seasonal efficiency class	(4)		A+	A+	A++	A+	A+	A+	-
EXCHANGERS									
HEAT EXCHANGER USER SIDE IN REFRIGERATION									
Water flow	(1)	l/s	1,91	2,17	2,45	2,85	3,20	3,87	4,40
Pressure drop	(1)	kPa	37,7	35,7	35,3	34,2	35,1	36,9	58,4
HEAT EXCHANGER USER SIDE IN HEATING									
Water flow	(3)	l/s	2,23	2,46	2,85	3,36	3,60	4,19	4,76
Pressure drop	(3)	kPa	51,0	46,0	47,8	47,4	44,5	43,2	68,4
REFRIGERANT CIRCUIT									
Compressors nr.		N°	2	2	2	2	2	2	2
No. Circuits		N°	1	1	1	1	1	1	1
Refrigerant charge		kg	14,0	15,5	15,6	16,8	17,1	19,9	30,0
NOISE LEVEL									
Sound Pressure	(5)	dB(A)	66	66	66	67	67	70	70
Sound power level in cooling	(6)(7)	dB(A)	84	84	84	85	85	88	88
Sound power level in heating	(6)(8)	dB(A)	84	84	84	85	85	88	88
SIZE AND WEIGHT									
Operating weight	(9)	kg	590	640	640	670	670	800	990
A	(9)	mm	2395	2395	2395	2395	2395	2825	3360
B	(9)	mm	1195	1195	1195	1195	1195	1195	1195
H	(9)	mm	1865	1865	1865	1865	1865	1980	1980

Notes:
1 Plant (side) cooling exchanger water (in/out) 12°C/7°C; Source (side) heat exchanger air (in) 35°C.
2 Values in compliance with EN14511-3:2013.
3 Plant (side) heat exchanger water (in/out) 40°C/45°C; Source (side) heat exchanger air (in) 7°C - 87% R.H.
4 Seasonal space heating energy efficiency class LOW TEMPERATURE in AVERAGE climate conditions [REGULATION (EU) N. 813/2013]
5 Average sound pressure level at 1m distance, unit in a free field on a reflective surface; non-binding value calculated from the sound power level.
6 Sound power on the basis of measurements made in compliance with ISO 9614.
7 Sound power level in cooling, outdoors.
8 Sound power level in heating, outdoors.
9 Unit in standard configuration/execution, without optional accessories.
10 Seasonal energy efficiency of the cooling environment [REGULATION (EU) N. 2016/2281]
11 Seasonal space heating energy index
12 Seasonal energy efficiency of the space cooling
13 Seasonal performance coefficient
14 Seasonal space heating energy efficiency
The units highlighted in this publication contain HFC R410A [GWP_{100} 2088] fluorinated greenhouse gases.

NX-N /CA			0402P	0452P	0502P	0562P	0612P	0712P	0812P
Power supply		V/ph/Hz	400/3/50	400/3/50	400/3/50	400/3/50	400/3/50	400/3/50	400/3/50
PERFORMANCE									
COOLING ONLY (GROSS VALUE)									
Cooling capacity	(1)	kW	102	116	131	153	170	198	219
Total power input	(1)	kW	34,4	39,1	43,5	51,3	56,5	66,5	72,2
EER	(1)	kW/kW	2,97	2,97	3,01	2,97	3,00	2,97	3,04
ESEER	(1)	kW/kW	4,13	4,17	4,05	4,04	4,05	3,93	3,86
COOLING ONLY (EN14511 VALUE)									
Cooling capacity	(1)(2)	kW	102	116	130	152	169	197	218
EER	(1)(2)	kW/kW	2,90	2,91	2,94	2,91	2,94	2,92	2,97
ESEER	(1)(2)	kW/kW	3,94	3,96	3,88	3,84	3,89	3,77	3,70
Cooling energy class			B	B	B	B	B	B	B
HEATING ONLY (GROSS VALUE)									
Total heating capacity	(3)	kW	110	122	138	161	181	209	232
Total power input	(3)	kW	33,9	37,6	42,4	49,7	55,6	64,4	71,2
COP	(3)	kW/kW	3,26	3,25	3,26	3,25	3,25	3,25	3,26
HEATING ONLY (EN14511 VALUE)									
Total heating capacity	(3)(2)	kW	111	123	139	162	182	210	234
COP	(3)(2)	kW/kW	3,21	3,21	3,22	3,20	3,21	3,21	3,22
Cooling energy class			A	A	A	A	A	A	A
ENERGY EFFICIENCY									
SEASONAL EFFICIENCY IN COOLING (Reg. EU 2016/2281)									
Ambient refrigeration									
Prated,c	(10)	kW	-	-	-	-	-	-	-
SEER	(10)(11)		-	-	-	-	-	-	-
Performance ηs	(10)(12)	%	-	-	-	-	-	-	-
SEASONAL EFFICIENCY IN HEATING (Reg. EU 813/2013)									
PDesign	(4)	kW	81,1	92,2	104	115	134	154	179
SCOP	(4)(13)		3,58	3,65	3,56	3,45	3,55	3,39	3,34
Performance ηs	(4)(14)	%	140	143	139	135	139	133	131
Seasonal efficiency class	(4)		-	-	-	-	-	-	-
EXCHANGERS									
HEAT EXCHANGER USER SIDE IN REFRIGERATION									
Water flow	(1)	l/s	4,89	5,56	6,26	7,29	8,12	9,45	10,50
Pressure drop	(1)	kPa	50,1	52,8	51,8	58,3	51,7	54,2	66,8
HEAT EXCHANGER USER SIDE IN HEATING									
Water flow	(3)	l/s	5,33	5,90	6,67	7,79	8,72	10,10	11,21
Pressure drop	(3)	kPa	59,6	59,5	58,8	66,5	59,7	61,9	76,2
REFRIGERANT CIRCUIT									
Compressors nr.		N°	2	2	2	2	2	2	2
No. Circuits		N°	1	1	1	1	1	1	1
Refrigerant charge		kg	34,5	38,0	44,5	51,3	54,1	60,6	63,9
NOISE LEVEL									
Sound Pressure	(5)	dB(A)	71	71	71	71	71	72	73
Sound power level in cooling	(6)(7)	dB(A)	89	89	90	91	91	92	93
Sound power level in heating	(6)(8)	dB(A)	89	89	90	91	91	92	93
SIZE AND WEIGHT									
Operating weight	(9)	kg	1120	1170	1290	1790	1890	2150	2260
A	(9)	mm	3360	3360	3980	4110	4110	5110	5110
B	(9)	mm	1195	1195	1195	2220	2220	2220	2220
H	(9)	mm	1980	1980	1980	2150	2150	2150	2150

Notes:
1 Plant (side) cooling exchanger water (in/out) 12°C/7°C; Source (side) heat exchanger air (in) 35°C.
2 Values in compliance with EN14511-3:2013.
3 Plant (side) heat exchanger water (in/out) 40°C/45°C; Source (side) heat exchanger air (in) 7°C - 87% R.H.
4 Seasonal space heating energy efficiency class LOW TEMPERATURE in AVERAGE climate conditions [REGULATION (EU) N. 813/2013]
5 Average sound pressure level at 1m distance, unit in a free field on a reflective surface; non-binding value calculated from the sound power level.
6 Sound power on the basis of measurements made in compliance with ISO 9614.
7 Sound power level in cooling, outdoors.
8 Sound power level in heating, outdoors.
9 Unit in standard configuration/execution, without optional accessories.
10 Seasonal energy efficiency of the cooling environment [REGULATION (EU) N. 2016/2281]
11 Seasonal space heating energy index
12 Seasonal energy efficiency of the space cooling
13 Seasonal performance coefficient
14 Seasonal space heating energy efficiency
The units highlighted in this publication contain HFC R410A [GWP_{100} 2088] fluorinated greenhouse gases.
Certified data in EUROVENT

NX-N /LN-CA			0152P	0182P	0202P	0252P	0262P	0302P	0352P
Power supply		V/ph/Hz	400/3+N/50	400/3+N/50	400/3+N/50	400/3+N/50	400/3+N/50	400/3/50	400/3/50
PERFORMANCE									
COOLING ONLY (GROSS VALUE)									
Cooling capacity	(1)	kW	36,3	40,9	47,5	54,3	59,8	79,4	87,1
Total power input	(1)	kW	14,6	16,9	19,5	22,0	25,2	26,8	31,2
EER	(1)	kW/kW	2,49	2,42	2,44	2,47	2,37	2,96	2,79
ESEER	(1)	kW/kW	3,98	3,90	4,14	3,89	3,83	4,12	4,08
COOLING ONLY (EN14511 VALUE)									
Cooling capacity	(1)(2)	kW	36,1	40,7	47,3	54,0	59,5	79,0	86,6
EER	(1)(2)	kW/kW	2,44	2,38	2,39	2,43	2,34	2,91	2,73
ESEER	(1)(2)	kW/kW	3,81	3,76	3,97	3,75	3,70	3,96	3,88
Cooling energy class			E	E	E	E	E	B	C
HEATING ONLY (GROSS VALUE)									
Total heating capacity	(3)	kW	46,1	51,0	59,0	69,5	74,5	86,8	98,6
Total power input	(3)	kW	14,1	15,5	18,1	21,3	22,9	26,7	30,3
COP	(3)	kW/kW	3,27	3,29	3,26	3,26	3,25	3,25	3,25
HEATING ONLY (EN14511 VALUE)									
Total heating capacity	(3)(2)	kW	46,4	51,3	59,4	69,9	74,9	87,3	99,3
COP	(3)(2)	kW/kW	3,21	3,24	3,21	3,22	3,21	3,21	3,20
Cooling energy class			A	A	A	A	A	A	A
ENERGY EFFICIENCY									
SEASONAL EFFICIENCY IN COOLING (Reg. EU 2016/2281)									
Ambient refrigeration									
Prated,c	(10)	kW	-	-	-	-	-	-	-
SEER	(10)(11)		-	-	-	-	-	-	-
Performance ηs	(10)(12)	%	-	-	-	-	-	-	-
SEASONAL EFFICIENCY IN HEATING (Reg. EU 813/2013)									
PDesign	(4)	kW	33,5	37,2	43,9	51,5	55,6	64,9	73,1
SCOP	(4)(13)		3,77	3,77	3,89	3,76	3,76	3,55	3,56
Performance ηs	(4)(14)	%	148	148	153	147	147	139	140
Seasonal efficiency class	(4)		A+	A+	A++	A+	A+	A+	-
EXCHANGERS									
HEAT EXCHANGER USER SIDE IN REFRIGERATION									
Water flow	(1)	l/s	1,73	1,96	2,27	2,60	2,86	3,80	4,17
Pressure drop	(1)	kPa	31,0	29,1	30,4	28,4	28,1	35,5	52,4
HEAT EXCHANGER USER SIDE IN HEATING									
Water flow	(3)	l/s	2,23	2,46	2,85	3,36	3,60	4,19	4,76
Pressure drop	(3)	kPa	51,0	46,0	47,8	47,4	44,5	43,2	68,4
REFRIGERANT CIRCUIT									
Compressors nr.		N°	2	2	2	2	2	2	2
No. Circuits		N°	1	1	1	1	1	1	1
Refrigerant charge		kg	14,0	15,5	15,6	16,8	17,1	19,9	30,0
NOISE LEVEL									
Sound Pressure	(5)	dB(A)	59	59	59	60	61	64	65
Sound power level in cooling	(6)(7)	dB(A)	77	77	77	78	79	82	83
Sound power level in heating	(6)(8)	dB(A)	78	78	78	79	80	83	84
SIZE AND WEIGHT									
Operating weight	(9)	kg	600	640	650	710	720	840	1000
A	(9)	mm	2395	2395	2395	2395	2395	2825	3360
B	(9)	mm	1195	1195	1195	1195	1195	1195	1195
H	(9)	mm	1865	1865	1865	1865	1865	1980	1980

Notes:
1 Plant (side) cooling exchanger water (in/out) 12°C/7°C; Source (side) heat exchanger air (in) 35°C.
2 Values in compliance with EN14511-3:2013.
3 Plant (side) heat exchanger water (in/out) 40°C/45°C; Source (side) heat exchanger air (in) 7°C - 87% R.H.
4 Seasonal space heating energy efficiency class LOW TEMPERATURE in AVERAGE climate conditions [REGULATION (EU) N. 813/2013]
5 Average sound pressure level at 1m distance, unit in a free field on a reflective surface; non-binding value calculated from the sound power level.
6 Sound power on the basis of measurements made in compliance with ISO 9614.
7 Sound power level in cooling, outdoors.
8 Sound power level in heating, outdoors.
9 Unit in standard configuration/execution, without optional accessories.
10 Seasonal energy efficiency of the cooling environment [REGULATION (EU) N. 2016/2281]
11 Seasonal space heating energy index
12 Seasonal energy efficiency of the space cooling
13 Seasonal performance coefficient
14 Seasonal space heating energy efficiency
The units highlighted in this publication contain HFC R410A [GWP_{100} 2088] fluorinated greenhouse gases.

NX-N /LN-CA			0402P	0452P	0502P	0562P	0612P	0712P	0812P
Power supply		V/ph/Hz	400/3/50	400/3/50	400/3/50	400/3/50	400/3/50	400/3/50	400/3/50
PERFORMANCE									
COOLING ONLY (GROSS VALUE)									
Cooling capacity	(1)	kW	99,0	110	125	144	165	189	212
Total power input	(1)	kW	34,5	39,7	43,7	50,1	55,7	63,8	70,1
EER	(1)	kW/kW	2,87	2,77	2,86	2,88	2,97	2,96	3,03
ESEER	(1)	kW/kW	4,09	4,12	4,04	4,01	4,12	3,95	3,91
COOLING ONLY (EN14511 VALUE)									
Cooling capacity	(1)(2)	kW	98,4	109	124	144	164	188	211
EER	(1)(2)	kW/kW	2,81	2,71	2,80	2,82	2,91	2,91	2,97
ESEER	(1)(2)	kW/kW	3,90	3,93	3,89	3,82	3,97	3,80	3,76
Cooling energy class			C	C	C	C	B	B	B
HEATING ONLY (GROSS VALUE)									
Total heating capacity	(3)	kW	110	122	138	161	181	209	232
Total power input	(3)	kW	33,9	37,6	42,4	49,7	55,6	64,4	71,2
COP	(3)	kW/kW	3,26	3,25	3,26	3,25	3,25	3,25	3,26
HEATING ONLY (EN14511 VALUE)									
Total heating capacity	(3)(2)	kW	111	123	139	162	182	210	234
COP	(3)(2)	kW/kW	3,21	3,21	3,22	3,20	3,21	3,21	3,22
Cooling energy class			A	A	A	A	A	A	A
ENERGY EFFICIENCY									
SEASONAL EFFICIENCY IN COOLING (Reg. EU 2016/2281)									
Ambient refrigeration									
Prated,c	(10)	kW	-	-	-	-	-	-	-
SEER	(10)(11)		-	-	-	-	-	-	-
Performance ηs	(10)(12)	%	-	-	-	-	-	-	-
SEASONAL EFFICIENCY IN HEATING (Reg. EU 813/2013)									
PDesign	(4)	kW	81,1	92,2	104	115	134	154	179
SCOP	(4)(13)		3,58	3,65	3,56	3,45	3,55	3,39	3,34
Performance ηs	(4)(14)	%	140	143	139	135	139	133	131
Seasonal efficiency class	(4)		-	-	-	-	-	-	-
EXCHANGERS									
HEAT EXCHANGER USER SIDE IN REFRIGERATION									
Water flow	(1)	l/s	4,73	5,26	5,97	6,90	7,91	9,03	10,16
Pressure drop	(1)	kPa	47,0	47,3	47,1	52,1	49,1	49,5	62,6
HEAT EXCHANGER USER SIDE IN HEATING									
Water flow	(3)	l/s	5,33	5,90	6,67	7,79	8,72	10,10	11,21
Pressure drop	(3)	kPa	59,6	59,5	58,8	66,5	59,7	61,9	76,2
REFRIGERANT CIRCUIT									
Compressors nr.		N°	2	2	2	2	2	2	2
No. Circuits		N°	1	1	1	1	1	1	1
Refrigerant charge		kg	34,5	38,0	44,5	51,3	54,1	60,6	63,9
NOISE LEVEL									
Sound Pressure	(5)	dB(A)	66	66	65	65	65	66	67
Sound power level in cooling	(6)(7)	dB(A)	84	84	84	85	85	86	87
Sound power level in heating	(6)(8)	dB(A)	85	85	85	86	86	87	88
SIZE AND WEIGHT									
Operating weight	(9)	kg	1130	1190	1300	1800	1900	2160	2270
A	(9)	mm	3360	3360	3980	4110	4110	5110	5110
B	(9)	mm	1195	1195	1195	2220	2220	2220	2220
H	(9)	mm	1980	1980	1980	2150	2150	2150	2150

Notes:
1 Plant (side) cooling exchanger water (in/out) 12°C/7°C; Source (side) heat exchanger air (in) 35°C.
2 Values in compliance with EN14511-3:2013.
3 Plant (side) heat exchanger water (in/out) 40°C/45°C; Source (side) heat exchanger air (in) 7°C - 87% R.H.
4 Seasonal space heating energy efficiency class LOW TEMPERATURE in AVERAGE climate conditions [REGULATION (EU) N. 813/2013]
5 Average sound pressure level at 1m distance, unit in a free field on a reflective surface; non-binding value calculated from the sound power level.
6 Sound power on the basis of measurements made in compliance with ISO 9614.
7 Sound power level in cooling, outdoors.
8 Sound power level in heating, outdoors.
9 Unit in standard configuration/execution, without optional accessories.
10 Seasonal energy efficiency of the cooling environment [REGULATION (EU) N. 2016/2281]
11 Seasonal space heating energy index
12 Seasonal energy efficiency of the space cooling
13 Seasonal performance coefficient
14 Seasonal space heating energy efficiency
The units highlighted in this publication contain HFC R410A [GWP_{100} 2088] fluorinated greenhouse gases.
Certified data in EUROVENT

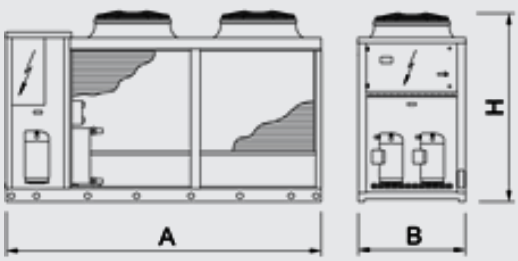

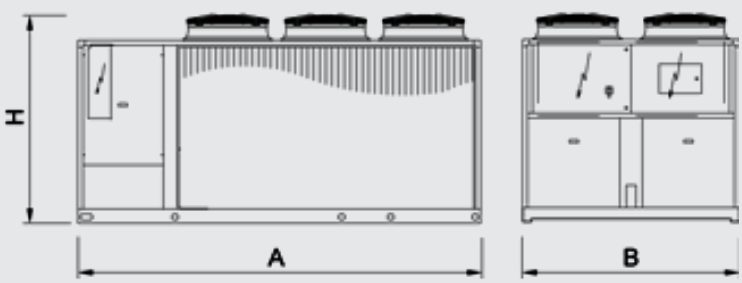

HEAT PUMPS

NX-N 0604P - 1204P

Reversible unit, air source for outdoor installation
148-319 kW



Outdoor reversible unit for the production of chilled/hot water with hermetic rotary Scroll compressors, ozone-friendly refrigerant R410A, axial-flow fans, copper tubes aluminum fins air coils, braze-welded plate-type exchanger and thermostatic expansion valve. External panels in pre-clad sheet steel and base in galvanised steel with paint finish. The range is composed by units equipped with four compressors in tandem configuration on two independent refrigerant circuits.

Version

K	Key efficiency, compact version
LN-K	Low Noise, Key efficiency and compact version
SL-K	Super Low noise, Key efficiency and compact version

Configurations

-	Basic function
D	Partial condensing heat recovery function

Features

REFRIGERANT GAS R410A

The use of R410A allowed to achive better energy efficiencies with environment full respect (ODP = 0)

INTEGRATED HYDRONIC GROUP

The optional built-in hydronic module already contains the main water circuit components; it is available with single or twin in-line, for achieving both low or high head.

Accessory

- Set-up for remote connectivity with ModBus/Echelon protocol cards
- Remote control keyboard (distance to 200m and to 500m)
- Soft starters
- Rubber anti-vibration mounting kit. Spring anti-vibration mounting kit (4 compressors models only)

Controls

W3000SE Compact

The W3000SE Compact controller offers advanced functions and algorithms.
The keypad features an easy-to-use interface and a complete LCD display, allowing to consult and intervene on the unit by means of a multi-level menu, with selectable language setting.
The regulation is based on the exclusive QuickMind algorithm, including self-adaptive control logics, beneficial in low water content systems. As alternatives the proportional- or proportional-integral regulations are also available.
The diagnostics includes a complete alarm management, with the "black-box" and alarm logging functions for enhanced analysis of the unit operation.
For multiple units' systems, the regulation of the resources, via optional proprietary devices, can be implemented. Energy metering, for both consumption and capacity, can also be developed. Supervision can be easily developed via proprietary devices or the integration in third party systems by means of the most common protocols as ModBus, Bacnet, Bacnet-over-IP, Echelon LonWorks.
Compatibility with the remote keyboard managing up to 10 units.
Availability of an internal real time clock for operation scheduling (4-day profiles with 10 hour belts).
The defrost adopts a proprietary self-adaptive logic, which features the monitoring of numerous operational parameters. This allows to reduce the number and duration of the defrost cycles, with a benefit for the overall energy efficiency.



NX-N / K			0604P	0704P	0804P	0904P	1004P	1104P	1204P
Power supply		V/ph/Hz	400/3/50	400/3/50	400/3/50	400/3/50	400/3/50	400/3/50	400/3/50
PERFORMANCE									
COOLING ONLY (GROSS VALUE)									
Cooling capacity	(1)	kW	160	186	211	245	274	298	319
Total power input	(1)	kW	56,9	67,4	75,9	88,8	99,4	106	116
EER	(1)	kW/kW	2,81	2,76	2,78	2,76	2,76	2,80	2,75
ESEER	(1)	kW/kW	3,87	4,01	4,07	3,95	3,99	4,05	4,04
COOLING ONLY (EN14511 VALUE)									
Cooling capacity	(1)(2)	kW	159	185	210	244	273	297	318
EER	(1)(2)	kW/kW	2,77	2,71	2,74	2,72	2,71	2,76	2,71
ESEER	(1)(2)	kW/kW	3,70	3,83	3,89	3,77	3,81	3,88	3,87
Cooling energy class			C	C	C	C	C	C	C
HEATING ONLY (GROSS VALUE)									
Total heating capacity	(3)	kW	174	202	230	271	299	324	345
Total power input	(3)	kW	56,4	66,4	75,4	89,2	98,3	106	113
COP	(3)	kW/kW	3,08	3,04	3,06	3,04	3,05	3,07	3,05
HEATING ONLY (EN14511 VALUE)									
Total heating capacity	(3)(2)	kW	174	203	232	273	301	325	346
COP	(3)(2)	kW/kW	3,05	3,01	3,03	3,01	3,02	3,04	3,03
Cooling energy class			B	B	B	B	B	B	B
ENERGY EFFICIENCY									
SEASONAL EFFICIENCY IN COOLING (Reg. EU 2016/2281)									
Ambient refrigeration									
Prated,c	(10)	kW	-	-	-	-	-	-	-
SEER	(10)(11)		-	-	-	-	-	-	-
Performance ηs	(10)(12)	%	-	-	-	-	-	-	-
SEASONAL EFFICIENCY IN HEATING (Reg. EU 813/2013)									
PDesign	(4)	kW	127	148	172	200	226	242	260
SCOP	(4)(13)		3,23	3,27	3,27	3,21	3,24	3,26	3,21
Performance ηs	(4)(14)	%	126	128	128	125	126	127	125
Seasonal efficiency class	(4)		-	-	-	-	-	-	-
EXCHANGERS									
HEAT EXCHANGER USER SIDE IN REFRIGERATION									
Water flow	(1)	l/s	7,66	8,88	10,09	11,73	13,11	14,25	15,27
Pressure drop	(1)	kPa	42,5	43,2	44,9	49,2	49,2	43,7	50,1
HEAT EXCHANGER USER SIDE IN HEATING									
Water flow	(3)	l/s	8,38	9,74	11,12	13,09	14,45	15,64	16,64
Pressure drop	(3)	kPa	50,9	51,9	54,5	61,3	59,8	52,6	59,5
REFRIGERANT CIRCUIT									
Compressors nr.		N°	4	4	4	4	4	4	4
No. Circuits		N°	2	2	2	2	2	2	2
Refrigerant charge		kg	34,4	55,6	72,6	74,4	74,0	95,0	95,6
NOISE LEVEL									
Sound Pressure	(5)	dB(A)	73	72	73	74	75	75	75
Sound power level in cooling	(6)(7)	dB(A)	92	92	93	94	95	95	95
Sound power level in heating	(6)(8)	dB(A)	92	92	93	94	95	95	95
SIZE AND WEIGHT									
Operating weight	(9)	kg	1640	1990	2120	2360	2500	2850	2880
A	(9)	mm	3110	4110	4110	4110	4110	5110	5110
B	(9)	mm	2220	2220	2220	2220	2220	2220	2220
H	(9)	mm	2150	2150	2150	2150	2150	2150	2150

Notes:
1 Plant (side) cooling exchanger water (in/out) 12°C/7°C; Source (side) heat exchanger air (in) 35°C.
2 Values in compliance with EN14511-3:2013.
3 Plant (side) heat exchanger water (in/out) 40°C/45°C; Source (side) heat exchanger air (in) 7°C - 87% R.H.
4 Seasonal space heating energy efficiency class LOW TEMPERATURE in AVERAGE climate conditions [REGULATION (EU) N. 813/2013]
5 Average sound pressure level at 1m distance, unit in a free field on a reflective surface; non-binding value calculated from the sound power level.
6 Sound power on the basis of measurements made in compliance with ISO 9614.
7 Sound power level in cooling, outdoors.
8 Sound power level in heating, outdoors.
9 Unit in standard configuration/execution, without optional accessories.
10 Seasonal energy efficiency of the cooling environment [REGULATION (EU) N. 2016/2281]
11 Seasonal space heating energy index
12 Seasonal energy efficiency of the space cooling
13 Seasonal performance coefficient
14 Seasonal space heating energy efficiency
The units highlighted in this publication contain HFC R410A [GWP_{100} 2088] fluorinated greenhouse gases.
Certified data in EUROVENT

NX-N / LN-K			0604P	0704P	0804P	0904P	1004P	1104P	1204P
Power supply		V/ph/Hz	400/3/50	400/3/50	400/3/50	400/3/50	400/3/50	400/3/50	400/3/50
PERFORMANCE									
COOLING ONLY (GROSS VALUE)									
Cooling capacity	(1)	kW	153	174	201	234	258	283	303
Total power input	(1)	kW	56,9	68,5	78,3	90,0	101	109	119
EER	(1)	kW/kW	2,68	2,55	2,56	2,60	2,55	2,60	2,54
ESEER	(1)	kW/kW	3,96	4,08	4,12	4,08	4,02	4,06	4,05
COOLING ONLY (EN14511 VALUE)									
Cooling capacity	(1)(2)	kW	152	174	200	233	257	282	302
EER	(1)(2)	kW/kW	2,64	2,51	2,53	2,57	2,51	2,57	2,51
ESEER	(1)(2)	kW/kW	3,78	3,90	3,95	3,90	3,86	3,91	3,88
Cooling energy class			D	D	D	D	D	D	D
HEATING ONLY (GROSS VALUE)									
Total heating capacity	(3)	kW	165	192	221	255	284	310	329
Total power input	(3)	kW	52,7	63,0	71,9	83,9	92,9	100	107
COP	(3)	kW/kW	3,14	3,05	3,08	3,04	3,05	3,09	3,07
HEATING ONLY (EN14511 VALUE)									
Total heating capacity	(3)(2)	kW	166	193	222	256	285	311	331
COP	(3)(2)	kW/kW	3,11	3,02	3,05	3,01	3,03	3,06	3,04
Cooling energy class			B	B	B	B	B	B	B
ENERGY EFFICIENCY									
SEASONAL EFFICIENCY IN COOLING (Reg. EU 2016/2281)									
Ambient refrigeration									
Prated,c	(10)	kW	-	-	-	-	-	-	-
SEER	(10)(11)		-	-	-	-	-	-	-
Performance ηs	(10)(12)	%	-	-	-	-	-	-	-
SEASONAL EFFICIENCY IN HEATING (Reg. EU 813/2013)									
PDesign	(4)	kW	126	132	170	196	223	239	257
SCOP	(4)(13)		3,34	3,30	3,51	3,37	3,38	3,42	3,43
Performance ηs	(4)(14)	%	130	129	137	132	132	134	134
Seasonal efficiency class	(4)		-	-	-	-	-	-	-
EXCHANGERS									
HEAT EXCHANGER USER SIDE IN REFRIGERATION									
Water flow	(1)	l/s	7,30	8,34	9,60	11,20	12,35	13,52	14,49
Pressure drop	(1)	kPa	38,7	38,0	40,6	44,9	43,7	39,3	45,2
HEAT EXCHANGER USER SIDE IN HEATING									
Water flow	(3)	l/s	7,98	9,28	10,69	12,31	13,70	14,97	15,88
Pressure drop	(3)	kPa	46,2	47,1	50,3	54,2	53,7	48,2	54,3
REFRIGERANT CIRCUIT									
Compressors nr.		N°	4	4	4	4	4	4	4
No. Circuits		N°	2	2	2	2	2	2	2
Refrigerant charge		kg	34,4	55,6	72,6	74,4	74,0	95,0	95,6
NOISE LEVEL									
Sound Pressure	(5)	dB(A)	67	66	67	68	69	70	70
Sound power level in cooling	(6)(7)	dB(A)	86	86	87	88	89	90	90
Sound power level in heating	(6)(8)	dB(A)	87	87	88	89	90	91	91
SIZE AND WEIGHT									
Operating weight	(9)	kg	1690	2040	2170	2410	2550	2900	2930
A	(9)	mm	3110	4110	4110	4110	4110	5110	5110
B	(9)	mm	2220	2220	2220	2220	2220	2220	2220
H	(9)	mm	2150	2150	2150	2150	2150	2150	2150

Notes:
1 Plant (side) cooling exchanger water (in/out) 12°C/7°C; Source (side) heat exchanger air (in) 35°C.
2 Values in compliance with EN14511-3:2013.
3 Plant (side) heat exchanger water (in/out) 40°C/45°C; Source (side) heat exchanger air (in) 7°C - 87% R.H.
4 Seasonal space heating energy efficiency class LOW TEMPERATURE in AVERAGE climate conditions [REGULATION (EU) N. 813/2013]
5 Average sound pressure level at 1m distance, unit in a free field on a reflective surface; non-binding value calculated from the sound power level.
6 Sound power on the basis of measurements made in compliance with ISO 9614.
7 Sound power level in cooling, outdoors.
8 Sound power level in heating, outdoors.
9 Unit in standard configuration/execution, without optional accessories.
10 Seasonal energy efficiency of the cooling environment [REGULATION (EU) N. 2016/2281]
11 Seasonal space heating energy index
12 Seasonal energy efficiency of the space cooling
13 Seasonal performance coefficient
14 Seasonal space heating energy efficiency
The units highlighted in this publication contain HFC R410A [GWP_{100} 2088] fluorinated greenhouse gases.
Certified data in EUROVENT

NX-N / SL-K			0604P	0704P	0804P	0904P	1004P	1104P	1204P
Power supply		V/ph/Hz	400/3/50	400/3/50	400/3/50	400/3/50	400/3/50	400/3/50	400/3/50
PERFORMANCE									
COOLING ONLY (GROSS VALUE)									
Cooling capacity	(1)	kW	148	175	202	232	256	281	303
Total power input	(1)	kW	57,8	68,5	78,9	88,2	100	111	119
EER	(1)	kW/kW	2,56	2,56	2,56	2,63	2,55	2,54	2,54
ESEER	(1)	kW/kW	4,07	4,07	4,11	4,12	4,12	4,09	4,09
COOLING ONLY (EN14511 VALUE)									
Cooling capacity	(1)(2)	kW	147	175	201	231	255	280	302
EER	(1)(2)	kW/kW	2,52	2,53	2,52	2,59	2,51	2,51	2,51
ESEER	(1)(2)	kW/kW	3,90	3,89	3,93	3,93	3,95	3,94	3,92
Cooling energy class			D	D	D	D	D	D	D
HEATING ONLY (GROSS VALUE)									
Total heating capacity	(3)	kW	160	193	223	257	283	307	330
Total power input	(3)	kW	51,2	63,6	72,5	82,2	91,2	100	108
COP	(3)	kW/kW	3,13	3,03	3,08	3,12	3,10	3,07	3,05
HEATING ONLY (EN14511 VALUE)									
Total heating capacity	(3)(2)	kW	161	194	224	258	284	308	332
COP	(3)(2)	kW/kW	3,10	3,01	3,05	3,09	3,07	3,04	3,02
Cooling energy class			B	B	B	B	B	B	B
ENERGY EFFICIENCY									
SEASONAL EFFICIENCY IN COOLING (Reg. EU 2016/2281)									
Ambient refrigeration									
Prated,c	(10)	kW	-	-	-	-	-	-	-
SEER	(10)(11)		-	-	-	-	-	-	-
Performance ηs	(10)(12)	%	-	-	-	-	-	-	-
SEASONAL EFFICIENCY IN HEATING (Reg. EU 813/2013)									
PDesign	(4)	kW	125	135	172	197	219	239	258
SCOP	(4)(13)		3,45	3,24	3,47	3,54	3,46	3,40	3,41
Performance ηs	(4)(14)	%	135	127	136	139	136	133	133
Seasonal efficiency class	(4)		-	-	-	-	-	-	-
EXCHANGERS									
HEAT EXCHANGER USER SIDE IN REFRIGERATION									
Water flow	(1)	l/s	7,08	8,39	9,64	11,10	12,23	13,44	14,51
Pressure drop	(1)	kPa	36,4	38,5	41,0	44,0	42,8	38,9	45,3
HEAT EXCHANGER USER SIDE IN HEATING									
Water flow	(3)	l/s	7,73	9,32	10,78	12,40	13,65	14,83	15,93
Pressure drop	(3)	kPa	43,4	47,5	51,2	55,0	53,3	47,3	54,6
REFRIGERANT CIRCUIT									
Compressors nr.		N°	4	4	4	4	4	4	4
No. Circuits		N°	2	2	2	2	2	2	2
Refrigerant charge		kg	34,4	55,6	72,6	96,8	96,8	95,0	95,6
NOISE LEVEL									
Sound Pressure	(5)	dB(A)	63	63	63	64	65	66	67
Sound power level in cooling	(6)(7)	dB(A)	82	83	83	84	85	86	87
Sound power level in heating	(6)(8)	dB(A)	83	84	84	85	86	87	88
SIZE AND WEIGHT									
Operating weight	(9)	kg	1690	2130	2260	2690	2830	3020	3040
A	(9)	mm	3110	4110	4110	5110	5110	5110	5110
B	(9)	mm	2220	2220	2220	2220	2220	2220	2220
H	(9)	mm	2150	2150	2150	2150	2150	2150	2150

Notes:
1 Plant (side) cooling exchanger water (in/out) 12°C/7°C; Source (side) heat exchanger air (in) 35°C.
2 Values in compliance with EN14511-3:2013.
3 Plant (side) heat exchanger water (in/out) 40°C/45°C; Source (side) heat exchanger air (in) 7°C - 87% R.H.
4 Seasonal space heating energy efficiency class LOW TEMPERATURE in AVERAGE climate conditions [REGULATION (EU) N. 813/2013]
5 Average sound pressure level at 1m distance, unit in a free field on a reflective surface; non-binding value calculated from the sound power level.
6 Sound power on the basis of measurements made in compliance with ISO 9614.
7 Sound power level in cooling, outdoors.
8 Sound power level in heating, outdoors.
9 Unit in standard configuration/execution, without optional accessories.
10 Seasonal energy efficiency of the cooling environment [REGULATION (EU) N. 2016/2281]
11 Seasonal space heating energy index
12 Seasonal energy efficiency of the space cooling
13 Seasonal performance coefficient
14 Seasonal space heating energy efficiency
The units highlighted in this publication contain HFC R410A [GWP_{100} 2088] fluorinated greenhouse gases.
Certified data in EUROVENT

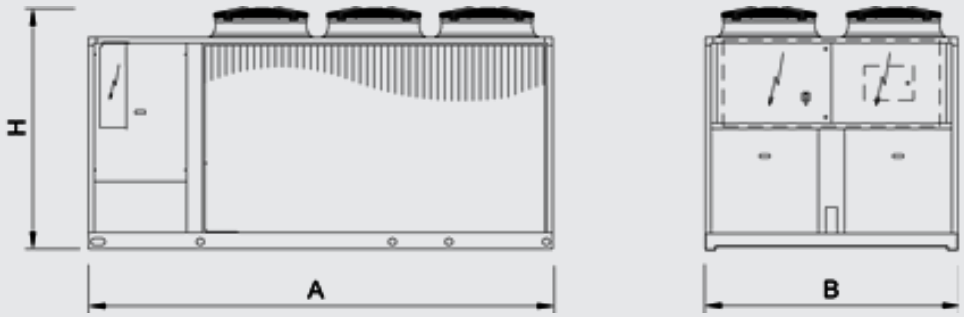

HEAT PUMPS

NECS-N 0202T - 0612T

Reversible unit, air source for outdoor installation
48,0-151 kW



Version

B	Basic
LN	Low noise

Features

REFRIGERANT GAS R410A

The use of R410A allowed to achive better energy efficiencies with environment full respect (ODP = 0)

EXCHANGER

The shell and tube exchanger allows to achieve the highest flexibility on the units installation, keeping the efficiency at the maximum level. For this reason, NECS represents the best choice for all the hydronic application on the residential, commercial and industrial markets.

INTEGRATED HYDRONIC GROUP

The built-in hydronic module already contains the main water circuit components; it is available with single or twin in-line, for achieving both low or high head.

MAXIMUM RELIABILITY

Unit with two independent refrigerant circuit, designed to ensure maximum efficiency at full load, ensuring uninterrupted operation even in the event of temporary stop of one of the two circuits.

Accessory

- Set-up for remote connectivity with ModBus/Echelon protocol cards
- Remote control keyboard (distance to 200m and to 500m)
- Soft starters
- Rubber anti-vibration mounting kit
- Compact keyboard with LCD display and multi-language user interface (referred to the shown picture)

Outdoor reversible heat pump for the production of chilled/hot water with hermetic rotary Scroll compressors, axial-flow fans, shell and tubes heat exchanger and thermostatic expansion valve. External panels in Peraluman and structure in aluminium sections. The range is equipped with two compressors on two independent refrigerant circuits.

Controls

W3000 Base – W3000SE Compact

The controller in two different versions according to the unit's type:

W3000 Base: electronic controller complete with keypad features an easy-to-use interface and a complete LCD display, allowing to consult and intervene on the unit by means of a menu up to three languages (Italian and English come standard, a further language can be chosen within French, Spanish, German, Russian and Swedish)

W3000SE Compact: electronic controller complete with keypad features an easy-to-use interface and a complete LCD display, allowing to consult and intervene on the unit by means of a multi-language menu, with selectable language setting on site. This controller also includes an internal clock.

All the W3000 electronic controllers offer advanced functions and algorithms.

The keypad features an easy-to-use interface and a complete LCD display, allowing to consult and intervene on the unit by means of a multi-level menu, with selectable language setting.

The regulation is based on the exclusive QuickMind algorithm, including self-adaptive control logics, beneficial in low water content systems. As alternatives the proportional- or proportional- integral regulations are also available.

The diagnostics includes a complete alarm management, with the "black-box" and alarm logging functions for enhanced analysis of the unit operation (available on W3000SE Compact only).

For multiple units' systems, the regulation of the resources, via optional proprietary devices, can be implemented. Energy metering, for both consumption and capacity, can also be developed.

Supervision can be easily developed via proprietary devices or the integration in third party systems by means of the most common protocols as ModBus, Bacnet, Bacnet-over-IP, Echelon LonWorks.

Compatibility with the remote keyboard managing up to 10 units.

The internal real time clock allows to manage a weekly schedule operating on 4-day profiles with 10 hour belts (available on W3000SE Compact only, optional on W3000 Base controller).

The defrost adopts a proprietary self-adaptive logic, which features the monitoring of numerous operational parameters.

This allows to reduce the number and duration of the defrost cycles, with a benefit for the overall energy efficiency.



NECS-N / B			0202T	0252T	0302T	0352T	0412T	0452T	0512T	0552T	0612T
Power supply		V/ph/Hz	400/3+N/50	400/3+N/50	400/3+N/50	400/3+N/50	400/3+N/50	400/3+N/50	400/3+N/50	400/3+N/50	400/3+N/50
PERFORMANCE											
COOLING ONLY (GROSS VALUE)											
Cooling capacity	(1)	kW	50,3	57,5	72,0	82,5	93,9	107	120	138	151
Total power input	(1)	kW	18,4	20,4	28,0	32,0	36,0	39,8	44,0	50,4	58,9
EER	(1)	kW/kW	2,73	2,82	2,57	2,58	2,61	2,68	2,73	2,73	2,56
ESEER	(1)	kW/kW	3,52	3,59	3,31	3,30	3,31	3,39	3,45	3,46	3,26
COOLING ONLY (EN14511 VALUE)											
Cooling capacity	(1)(2)	kW	50,2	57,4	71,8	82,3	93,7	106	120	137	150
EER	(1)(2)	kW/kW	2,72	2,80	2,55	2,55	2,59	2,65	2,71	2,70	2,53
ESEER	(1)(2)	kW/kW	3,48	3,53	3,25	3,25	3,26	3,33	3,39	3,38	3,18
Cooling energy class			C	C	D	D	D	D	C	C	D
HEATING ONLY (GROSS VALUE)											
Total heating capacity	(3)	kW	55,1	65,2	81,0	93,5	105	121	136	157	173
Total power input	(3)	kW	18,5	21,2	26,1	29,8	33,9	37,9	42,3	48,4	54,4
COP	(3)	kW/kW	2,98	3,08	3,10	3,14	3,11	3,18	3,21	3,23	3,17
HEATING ONLY (EN14511 VALUE)											
Total heating capacity	(3)(2)	kW	55,2	65,3	81,2	93,8	106	121	136	157	173
COP	(3)(2)	kW/kW	2,97	3,06	3,09	3,12	3,09	3,16	3,19	3,21	3,15
Cooling energy class			C	B	B	B	B	B	B	A	B
ENERGY EFFICIENCY											
SEASONAL EFFICIENCY IN COOLING (Reg. EU 2016/2281)											
Ambient refrigeration											
Prated,c	(10)	kW	-	-	-	-	-	-	-	-	-
SEER	(10)(11)		-	-	-	-	-	-	-	-	-
Performance ηs	(10)(12)	%	-	-	-	-	-	-	-	-	-
SEASONAL EFFICIENCY IN HEATING (Reg. EU 813/2013)											
PDesign	(4)	kW	42,2	47,8	60,6	71,7	76,5	91,3	97,5	117	132
SCOP	(4)(13)		3,22	3,24	3,22	3,27	3,21	3,30	3,29	3,36	3,31
Performance ηs	(4)(14)	%	126	127	126	128	125	129	129	131	129
Seasonal efficiency class	(4)		A+	A+	A+	-	-	-	-	-	-
EXCHANGERS											
HEAT EXCHANGER USER SIDE IN REFRIGERATION											
Water flow	(1)	l/s	2,40	2,75	3,45	3,94	4,49	5,10	5,74	6,58	7,20
Pressure drop	(1)	kPa	5,60	7,29	11,6	15,1	11,9	15,4	14,1	19,6	23,4
HEAT EXCHANGER USER SIDE IN HEATING											
Water flow	(3)	l/s	2,66	3,15	3,91	4,51	5,09	5,82	6,55	7,56	8,33
Pressure drop	(3)	kPa	6,86	9,54	14,9	19,8	15,3	20,0	18,4	25,8	31,4
REFRIGERANT CIRCUIT											
Compressors nr.		N°	2	2	2	2	2	2	2	2	2
No. Circuits		N°	2	2	2	2	2	2	2	2	2
Refrigerant charge		kg	19,0	22,0	22,0	23,0	27,0	30,0	36,0	41,0	46,0
NOISE LEVEL											
Sound Pressure	(5)	dB(A)	68	68	68	69	69	69	69	69	69
Sound power level in cooling	(6)(7)	dB(A)	85	85	85	86	86	86	87	87	87
Sound power level in heating	(6)(8)	dB(A)	85	85	85	86	86	86	87	87	87
SIZE AND WEIGHT											
Operating weight	(9)	kg	645	670	710	800	985	1030	1175	1220	1265
A	(9)	mm	2195	2195	2195	2195	2745	2745	3245	3245	3245
B	(9)	mm	1120	1120	1120	1120	1120	1120	1120	1120	1120
H	(9)	mm	1465	1465	1465	1465	1465	1465	1665	1665	1665

Notes:
1 Plant (side) cooling exchanger water (in/out) 12°C/7°C; Source (side) heat exchanger air (in) 35°C.
2 Values in compliance with EN14511-3:2013.
3 Plant (side) heat exchanger water (in/out) 40°C/45°C; Source (side) heat exchanger air (in) 7°C - 87% R.H.
4 Seasonal space heating energy efficiency class LOW TEMPERATURE in AVERAGE climate conditions [REGULATION (EU) N. 813/2013]
5 Average sound pressure level at 1m distance, unit in a free field on a reflective surface; non-binding value calculated from the sound power level.
6 Sound power on the basis of measurements made in compliance with ISO 9614.
7 Sound power level in cooling, outdoors.
8 Sound power level in heating, outdoors.
9 Unit in standard configuration/execution, without optional accessories.
10 Seasonal energy efficiency of the cooling environment [REGULATION (EU) N. 2016/2281]
11 Seasonal space heating energy index
12 Seasonal energy efficiency of the space cooling
13 Seasonal performance coefficient
14 Seasonal space heating energy efficiency
The units highlighted in this publication contain HFC R410A [GWP_{100} 2088] fluorinated greenhouse gases.
Certified data in EUROVENT

NECS-N / LN			0202T	0252T	0302T	0352T	0412T	0452T	0512T	0552T	0612T
Power supply		V/ph/Hz	400/3+N/50	400/3+N/50	400/3+N/50	400/3+N/50	400/3+N/50	400/3+N/50	400/3+N/50	400/3+N/50	400/3+N/50
PERFORMANCE											
COOLING ONLY (GROSS VALUE)											
Cooling capacity	(1)	kW	48,0	54,6	73,2	83,5	93,9	103	119	132	143
Total power input	(1)	kW	19,0	21,3	27,2	31,9	36,0	41,6	44,6	53,3	62,7
EER	(1)	kW/kW	2,53	2,56	2,69	2,62	2,61	2,48	2,67	2,47	2,28
ESEER	(1)	kW/kW	3,52	3,31	3,46	3,33	3,33	3,17	3,38	3,16	2,93
COOLING ONLY (EN14511 VALUE)											
Cooling capacity	(1)(2)	kW	47,9	54,5	73,0	83,3	93,7	103	119	131	143
EER	(1)(2)	kW/kW	2,51	2,55	2,67	2,59	2,59	2,46	2,64	2,45	2,26
ESEER	(1)(2)	kW/kW	3,26	3,26	3,39	3,27	3,27	3,11	3,32	3,11	2,88
Cooling energy class			D	D	D	D	D	E	D	E	F
HEATING ONLY (GROSS VALUE)											
Total heating capacity	(3)	kW	54,1	63,6	84,1	96,2	109	121	137	154	169
Total power input	(3)	kW	18,1	20,6	26,1	30,4	34,1	37,9	42,4	48,3	54,3
COP	(3)	kW/kW	2,99	3,09	3,22	3,16	3,19	3,18	3,24	3,19	3,12
HEATING ONLY (EN14511 VALUE)											
Total heating capacity	(3)(2)	kW	54,2	63,7	84,3	96,5	109	121	138	154	170
COP	(3)(2)	kW/kW	2,98	3,07	3,20	3,14	3,18	3,16	3,22	3,16	3,10
Cooling energy class			C	B	A	B	B	B	A	B	B
ENERGY EFFICIENCY											
SEASONAL EFFICIENCY IN COOLING (Reg. EU 2016/2281)											
Ambient refrigeration											
Prated,c	(10)	kW	-	-	-	-	-	-	-	-	-
SEER	(10)(11)		-	-	-	-	-	-	-	-	-
Performance ηs	(10)(12)	%	-	-	-	-	-	-	-	-	-
SEASONAL EFFICIENCY IN HEATING (Reg. EU 813/2013)											
PDesign	(4)	kW	38,3	45,3	59,2	66,7	79,5	90,6	103	116	130
SCOP	(4)(13)		3,32	3,37	3,44	3,33	3,47	3,45	3,51	3,32	3,27
Performance ηs	(4)(14)	%	130	132	135	130	136	135	138	130	128
Seasonal efficiency class	(4)		A+	A+	A+	A+	-	-	-	-	-
EXCHANGERS											
HEAT EXCHANGER USER SIDE IN REFRIGERATION											
Water flow	(1)	l/s	2,30	2,61	3,50	3,99	4,49	4,94	5,69	6,30	6,84
Pressure drop	(1)	kPa	5,11	6,58	11,9	15,5	11,9	14,4	13,8	17,9	21,2
HEAT EXCHANGER USER SIDE IN HEATING											
Water flow	(3)	l/s	2,61	3,07	4,06	4,64	5,26	5,82	6,64	7,43	8,18
Pressure drop	(3)	kPa	6,60	9,09	16,1	20,9	16,4	20,0	18,8	25,0	30,2
REFRIGERANT CIRCUIT											
Compressors nr.		N°	2	2	2	2	2	2	2	2	2
No. Circuits		N°	2	2	2	2	2	2	2	2	2
Refrigerant charge		kg	19,0	22,0	25,0	35,0	38,0	34,0	49,0	41,0	46,0
NOISE LEVEL											
Sound Pressure	(5)	dB(A)	63	63	64	65	65	65	66	66	66
Sound power level in cooling	(6)(7)	dB(A)	80	80	81	83	83	83	84	84	84
Sound power level in heating	(6)(8)	dB(A)	81	81	82	84	84	84	85	85	85
SIZE AND WEIGHT											
Operating weight	(9)	kg	645	670	795	935	1060	1065	1230	1220	1265
A	(9)	mm	2195	2195	2745	2745	2745	2745	3245	3245	3245
B	(9)	mm	1120	1120	1120	1120	1120	1120	1120	1120	1120
H	(9)	mm	1465	1465	1465	1665	1665	1665	1665	1665	1665

Notes:
1 Plant (side) cooling exchanger water (in/out) 12°C/7°C; Source (side) heat exchanger air (in) 35°C.
2 Values in compliance with EN14511-3:2013.
3 Plant (side) heat exchanger water (in/out) 40°C/45°C; Source (side) heat exchanger air (in) 7°C - 87% R.H.
4 Seasonal space heating energy efficiency class LOW TEMPERATURE in AVERAGE climate conditions [REGULATION (EU) N. 813/2013]
5 Average sound pressure level at 1m distance, unit in a free field on a reflective surface; non-binding value calculated from the sound power level.
6 Sound power on the basis of measurements made in compliance with ISO 9614.
7 Sound power level in cooling, outdoors.
8 Sound power level in heating, outdoors.
9 Unit in standard configuration/execution, without optional accessories.
10 Seasonal energy efficiency of the cooling environment [REGULATION (EU) N. 2016/2281]
11 Seasonal space heating energy index
12 Seasonal energy efficiency of the space cooling
13 Seasonal performance coefficient
14 Seasonal space heating energy efficiency
The units highlighted in this publication contain HFC R410A [GWP_{100} 2088] fluorinated greenhouse gases.
Certified data in EUROVENT

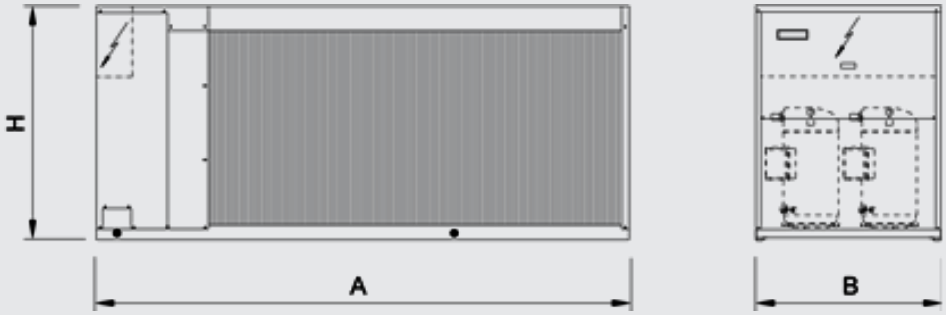

HEAT PUMPS

NX-N 0604T - 1204T

Reversible unit, air source for outdoor installation
148-335 kW



Outdoor reversible unit for the production of chilled/hot water with hermetic rotary Scroll compressors, ozone-friendly refrigerant R410A, axial-flow fans, copper tubes aluminum fins air coils, shell and tubes heat exchanger, and thermostatic or electronic expansion valve, according to the model. External panels in pre-clad sheet steel and base in galvanised steel with paint finish. The range is composed by units equipped with four compressors in tandem configuration on two independent refrigerant circuits.

Version

K	Key efficiency, compact version
LN-K	Low Noise, Key efficiency and compact version
SL-K	Super Low noise, Key efficiency and compact version
CA	Class A of efficiency
LN-CA	Low Noise, Class A of efficiency
SL-CA	Super Low noise version, Class A of efficiency

Configurations

-	Basic function
D	Partial condensing heat recovery function

Features

REFRIGERANT GAS R410A

The use of R410A allowed to achive better energy efficiencies with environment full respect (ODP = 0)

ELECTRONIC EXPANSION VALVE SUPPLIED STANDARD

The use of the electronic expansion valve generates considerable benefits, especially in cases of variable demand and different external conditions. It has been introduced into these units as a result of accurate design choices concerning the cooling circuit and the optimisation of operation in various different working conditions. The electronic expansion valve comes standard in the high-efficieny CA version, optional for the compact K versions.

CLASS A EFFICIENCY

The full range is also available with the Class A efficiency rating (in heating). NX-N/CA guaranties within all the noise configurations premium levels of efficiency thanks to the generous sizing of the refrigerant-exchange surface areas and to an accurate control of the fans.

EXCHANGER

The shell and tube exchanger allows to achieve the highest flexibility on the unit's installation, keeping on the hydronic side the pressure drops at the minimum level, thus representing the best choice for all the hydronic applications on the residential, commercial and industrial markets.

INTEGRATED HYDRONIC GROUP

The optional built-in hydronic module already contains the main water circuit components; it is available with single or twin in-line, for achieving both low or high head.

Accessory

- Set-up for remote connectivity with ModBus/Echelon protocol cards
- Remote control keyboard (distance to 200m and to 500m)
- Soft starters
- Electronic expansion valve

Controls

W3000SE Compact

The W3000SE Compact controller offers advanced functions and algorithms.
The keypad features an easy-to-use interface and a complete LCD display, allowing to consult and intervene on the unit by means of a multi-level menu, with selectable language setting.
The regulation is based on the exclusive QuickMind algorithm, including self-adaptive control logics, beneficial in low water content systems. As alternatives the proportional- or proportional-integral regulations are also available.
The diagnostics includes a complete alarm management, with the "black-box" and alarm logging functions for enhanced analysis of the unit operation.
For multiple units' systems, the regulation of the resources, via optional proprietary devices, can be implemented. Energy metering, for both consumption and capacity, can also be developed. Supervision can be easily developed via proprietary devices or the integration in third party systems by means of the most common protocols as ModBus, Bacnet, Bacnet-over-IP, Echelon LonWorks.
Compatibility with the remote keyboard managing up to 10 units.
Availability of an internal real time clock for operation scheduling (4-day profiles with 10 hour belts).
The defrost adopts a proprietary self-adaptive logic, which features the monitoring of numerous operational parameters. This allows to reduce the number and duration of the defrost cycles, with a benefit for the overall energy efficiency.



NX-N / K			0604T	0704T	0804T	0904T	1004T	1104T	1204T
Power supply		V/ph/Hz	400/3/50	400/3/50	400/3/50	400/3/50	400/3/50	400/3/50	400/3/50
PERFORMANCE									
COOLING ONLY (GROSS VALUE)									
Cooling capacity	(1)	kW	160	186	211	245	274	298	319
Total power input	(1)	kW	56,9	67,4	75,9	88,8	99,4	106	116
EER	(1)	kW/kW	2,81	2,76	2,78	2,76	2,76	2,80	2,75
ESEER	(1)	kW/kW	3,87	4,01	4,07	3,95	3,99	4,05	4,04
COOLING ONLY (EN14511 VALUE)									
Cooling capacity	(1)(2)	kW	160	185	210	244	273	297	318
EER	(1)(2)	kW/kW	2,78	2,72	2,73	2,72	2,71	2,77	2,72
ESEER	(1)(2)	kW/kW	3,77	3,86	3,87	3,78	3,80	3,91	3,89
Cooling energy class			C	C	C	C	C	C	C
HEATING ONLY (GROSS VALUE)									
Total heating capacity	(3)	kW	174	202	230	271	299	324	345
Total power input	(3)	kW	56,4	66,4	75,4	89,2	98,3	106	113
COP	(3)	kW/kW	3,08	3,04	3,06	3,04	3,05	3,07	3,05
HEATING ONLY (EN14511 VALUE)									
Total heating capacity	(3)(2)	kW	174	202	232	273	301	325	346
COP	(3)(2)	kW/kW	3,06	3,01	3,02	3,01	3,01	3,04	3,03
Cooling energy class			B	B	B	B	B	B	B
ENERGY EFFICIENCY									
SEASONAL EFFICIENCY IN COOLING (Reg. EU 2016/2281)									
Ambient refrigeration									
Prated,c	(10)	kW	-	-	-	-	-	-	-
SEER	(10)(11)		-	-	-	-	-	-	-
Performance ηs	(10)(12)	%	-	-	-	-	-	-	-
SEASONAL EFFICIENCY IN HEATING (Reg. EU 813/2013)									
PDesign	(4)	kW	127	148	172	200	226	241	260
SCOP	(4)(13)		3,27	3,29	3,26	3,21	3,22	3,27	3,22
Performance ηs	(4)(14)	%	128	129	127	125	126	128	126
Seasonal efficiency class	(4)		-	-	-	-	-	-	-
EXCHANGERS									
HEAT EXCHANGER USER SIDE IN REFRIGERATION									
Water flow	(1)	l/s	7,66	8,88	10,09	11,73	13,11	14,25	15,27
Pressure drop	(1)	kPa	22,0	29,7	47,8	44,4	55,5	35,5	40,8
HEAT EXCHANGER USER SIDE IN HEATING									
Water flow	(3)	l/s	8,38	9,74	11,12	13,09	14,45	15,64	16,64
Pressure drop	(3)	kPa	26,4	35,6	58,0	55,3	67,4	42,8	48,4
REFRIGERANT CIRCUIT									
Compressors nr.		N°	4	4	4	4	4	4	4
No. Circuits		N°	2	2	2	2	2	2	2
Refrigerant charge		kg	35,6	56,2	77,2	74,4	74,4	96,8	96,8
NOISE LEVEL									
Sound Pressure	(5)	dB(A)	73	72	73	74	75	75	75
Sound power level in cooling	(6)(7)	dB(A)	92	92	93	94	95	95	95
Sound power level in heating	(6)(8)	dB(A)	92	92	93	94	95	95	95
SIZE AND WEIGHT									
Operating weight	(9)	kg	1810	2180	2340	2560	2650	3150	3190
A	(9)	mm	3110	4110	4110	4110	4110	5110	5110
B	(9)	mm	2220	2220	2220	2220	2220	2220	2220
H	(9)	mm	2150	2150	2150	2150	2150	2150	2150

Notes:
1 Plant (side) cooling exchanger water (in/out) 12°C/7°C; Source (side) heat exchanger air (in) 35°C.
2 Values in compliance with EN14511-3:2013.
3 Plant (side) heat exchanger water (in/out) 40°C/45°C; Source (side) heat exchanger air (in) 7°C - 87% R.H.
4 Seasonal space heating energy efficiency class LOW TEMPERATURE in AVERAGE climate conditions [REGULATION (EU) N. 813/2013]
5 Average sound pressure level at 1m distance, unit in a free field on a reflective surface; non-binding value calculated from the sound power level.
6 Sound power on the basis of measurements made in compliance with ISO 9614.
7 Sound power level in cooling, outdoors.
8 Sound power level in heating, outdoors.
9 Unit in standard configuration/execution, without optional accessories.
10 Seasonal energy efficiency of the cooling environment [REGULATION (EU) N. 2016/2281]
11 Seasonal space heating energy index
12 Seasonal energy efficiency of the space cooling
13 Seasonal performance coefficient
14 Seasonal space heating energy efficiency
The units highlighted in this publication contain HFC R410A [GWP_{100} 2088] fluorinated greenhouse gases.
Certified data in EUROVENT

NX-N / LN-K			0604T	0704T	0804T	0904T	1004T	1104T	1204T
Power supply		V/ph/Hz	400/3/50	400/3/50	400/3/50	400/3/50	400/3/50	400/3/50	400/3/50
PERFORMANCE									
COOLING ONLY (GROSS VALUE)									
Cooling capacity	(1)	kW	153	174	201	234	258	283	303
Total power input	(1)	kW	56,9	68,5	78,3	90,0	101	109	119
EER	(1)	kW/kW	2,68	2,55	2,56	2,60	2,55	2,60	2,54
ESEER	(1)	kW/kW	3,96	4,08	4,12	4,08	4,02	4,06	4,05
COOLING ONLY (EN14511 VALUE)									
Cooling capacity	(1)(2)	kW	152	174	200	233	257	282	302
EER	(1)(2)	kW/kW	2,66	2,52	2,53	2,57	2,51	2,57	2,51
ESEER	(1)(2)	kW/kW	3,85	3,94	3,94	3,91	3,84	3,93	3,91
Cooling energy class			D	D	D	D	D	D	D
HEATING ONLY (GROSS VALUE)									
Total heating capacity	(3)	kW	165	192	221	255	284	310	329
Total power input	(3)	kW	52,7	63,0	71,9	83,9	92,9	100	107
COP	(3)	kW/kW	3,14	3,05	3,08	3,04	3,05	3,09	3,07
HEATING ONLY (EN14511 VALUE)									
Total heating capacity	(3)(2)	kW	166	193	222	256	285	311	330
COP	(3)(2)	kW/kW	3,12	3,03	3,05	3,01	3,02	3,07	3,04
Cooling energy class			B	B	B	B	B	B	B
ENERGY EFFICIENCY									
SEASONAL EFFICIENCY IN COOLING (Reg. EU 2016/2281)									
Ambient refrigeration									
Prated,c	(10)	kW	-	-	-	-	-	-	-
SEER	(10)(11)		-	-	-	-	-	-	-
Performance ηs	(10)(12)	%	-	-	-	-	-	-	-
SEASONAL EFFICIENCY IN HEATING (Reg. EU 813/2013)									
PDesign	(4)	kW	126	132	170	196	223	239	257
SCOP	(4)(13)		3,38	3,33	3,50	3,39	3,36	3,43	3,45
Performance ηs	(4)(14)	%	132	130	137	132	131	134	135
Seasonal efficiency class	(4)		-	-	-	-	-	-	-
EXCHANGERS									
HEAT EXCHANGER USER SIDE IN REFRIGERATION									
Water flow	(1)	l/s	7,30	8,34	9,60	11,20	12,35	13,52	14,49
Pressure drop	(1)	kPa	20,1	26,1	43,2	40,5	49,2	32,0	36,8
HEAT EXCHANGER USER SIDE IN HEATING									
Water flow	(3)	l/s	7,98	9,28	10,69	12,31	13,70	14,97	15,88
Pressure drop	(3)	kPa	23,9	32,4	53,6	48,9	60,5	39,2	44,1
REFRIGERANT CIRCUIT									
Compressors nr.		N°	4	4	4	4	4	4	4
No. Circuits		N°	2	2	2	2	2	2	2
Refrigerant charge		kg	35,6	56,2	77,2	74,4	74,4	96,8	96,8
NOISE LEVEL									
Sound Pressure	(5)	dB(A)	67	66	67	68	69	70	70
Sound power level in cooling	(6)(7)	dB(A)	86	86	87	88	89	90	90
Sound power level in heating	(6)(8)	dB(A)	87	87	88	89	90	91	91
SIZE AND WEIGHT									
Operating weight	(9)	kg	1860	2230	2390	2610	2700	3200	3240
A	(9)	mm	3110	4110	4110	4110	4110	5110	5110
B	(9)	mm	2220	2220	2220	2220	2220	2220	2220
H	(9)	mm	2150	2150	2150	2150	2150	2150	2150

Notes:
1 Plant (side) cooling exchanger water (in/out) 12°C/7°C; Source (side) heat exchanger air (in) 35°C.
2 Values in compliance with EN14511-3:2013.
3 Plant (side) heat exchanger water (in/out) 40°C/45°C; Source (side) heat exchanger air (in) 7°C - 87% R.H.
4 Seasonal space heating energy efficiency class LOW TEMPERATURE in AVERAGE climate conditions [REGULATION (EU) N. 813/2013]
5 Average sound pressure level at 1m distance, unit in a free field on a reflective surface; non-binding value calculated from the sound power level.
6 Sound power on the basis of measurements made in compliance with ISO 9614.
7 Sound power level in cooling, outdoors.
8 Sound power level in heating, outdoors.
9 Unit in standard configuration/execution, without optional accessories.
10 Seasonal energy efficiency of the cooling environment [REGULATION (EU) N. 2016/2281]
11 Seasonal space heating energy index
12 Seasonal energy efficiency of the space cooling
13 Seasonal performance coefficient
14 Seasonal space heating energy efficiency
The units highlighted in this publication contain HFC R410A [GWP_{100} 2088] fluorinated greenhouse gases.
Certified data in EUROVENT

NX-N / SL-K			0604T	0704T	0804T	0904T	1004T	1104T	1204T
Power supply		V/ph/Hz	400/3/50	400/3/50	400/3/50	400/3/50	400/3/50	400/3/50	400/3/50
PERFORMANCE									
COOLING ONLY (GROSS VALUE)									
Cooling capacity	(1)	kW	148	175	202	232	256	281	303
Total power input	(1)	kW	57,8	68,5	78,9	88,2	100	111	119
EER	(1)	kW/kW	2,56	2,56	2,56	2,63	2,55	2,54	2,54
ESEER	(1)	kW/kW	4,07	4,07	4,11	4,12	4,12	4,09	4,09
COOLING ONLY (EN14511 VALUE)									
Cooling capacity	(1)(2)	kW	148	175	201	231	255	280	302
EER	(1)(2)	kW/kW	2,54	2,53	2,52	2,59	2,51	2,52	2,51
ESEER	(1)(2)	kW/kW	3,96	3,94	3,93	3,95	3,94	3,96	3,94
Cooling energy class			D	D	D	D	D	D	D
HEATING ONLY (GROSS VALUE)									
Total heating capacity	(3)	kW	160	193	223	257	283	307	330
Total power input	(3)	kW	51,2	63,6	72,5	82,2	91,2	100	108
COP	(3)	kW/kW	3,13	3,03	3,08	3,12	3,10	3,07	3,05
HEATING ONLY (EN14511 VALUE)									
Total heating capacity	(3)(2)	kW	161	194	224	258	284	308	331
COP	(3)(2)	kW/kW	3,11	3,01	3,05	3,10	3,07	3,05	3,03
Cooling energy class			B	B	B	B	B	B	B
ENERGY EFFICIENCY									
SEASONAL EFFICIENCY IN COOLING (Reg. EU 2016/2281)									
Ambient refrigeration									
Prated,c	(10)	kW	-	-	-	-	-	-	-
SEER	(10)(11)		-	-	-	-	-	-	-
Performance ηs	(10)(12)	%	-	-	-	-	-	-	-
SEASONAL EFFICIENCY IN HEATING (Reg. EU 813/2013)									
PDesign	(4)	kW	124	134	172	196	220	238	257
SCOP	(4)(13)		3,49	3,28	3,46	3,55	3,44	3,41	3,43
Performance ηs	(4)(14)	%	136	128	135	139	135	134	134
Seasonal efficiency class	(4)		-	-	-	-	-	-	-
EXCHANGERS									
HEAT EXCHANGER USER SIDE IN REFRIGERATION									
Water flow	(1)	l/s	7,08	8,39	9,64	11,10	12,23	13,44	14,51
Pressure drop	(1)	kPa	18,8	26,5	43,6	39,7	48,2	31,6	36,8
HEAT EXCHANGER USER SIDE IN HEATING									
Water flow	(3)	l/s	7,73	9,32	10,78	12,40	13,65	14,83	15,93
Pressure drop	(3)	kPa	22,5	32,6	54,5	49,6	60,1	38,5	44,4
REFRIGERANT CIRCUIT									
Compressors nr.		N°	4	4	4	4	4	4	4
No. Circuits		N°	2	2	2	2	2	2	2
Refrigerant charge		kg	35,6	56,2	77,2	94,0	94,0	96,8	96,8
NOISE LEVEL									
Sound Pressure	(5)	dB(A)	63	63	63	64	65	66	67
Sound power level in cooling	(6)(7)	dB(A)	82	83	83	84	85	86	87
Sound power level in heating	(6)(8)	dB(A)	83	84	84	85	86	87	88
SIZE AND WEIGHT									
Operating weight	(9)	kg	1860	2310	2470	2870	2980	3320	3370
A	(9)	mm	3110	4110	4110	5110	5110	5110	5110
B	(9)	mm	2220	2220	2220	2220	2220	2220	2220
H	(9)	mm	2150	2150	2150	2150	2150	2150	2150

Notes:
1 Plant (side) cooling exchanger water (in/out) 12°C/7°C; Source (side) heat exchanger air (in) 35°C.
2 Values in compliance with EN14511-3:2013.
3 Plant (side) heat exchanger water (in/out) 40°C/45°C; Source (side) heat exchanger air (in) 7°C - 87% R.H.
4 Seasonal space heating energy efficiency class LOW TEMPERATURE in AVERAGE climate conditions [REGULATION (EU) N. 813/2013]
5 Average sound pressure level at 1m distance, unit in a free field on a reflective surface; non-binding value calculated from the sound power level.
6 Sound power on the basis of measurements made in compliance with ISO 9614.
7 Sound power level in cooling, outdoors.
8 Sound power level in heating, outdoors.
9 Unit in standard configuration/execution, without optional accessories.
10 Seasonal energy efficiency of the cooling environment [REGULATION (EU) N. 2016/2281]
11 Seasonal space heating energy index
12 Seasonal energy efficiency of the space cooling
13 Seasonal performance coefficient
14 Seasonal space heating energy efficiency
The units highlighted in this publication contain HFC R410A [GWP_{100} 2088] fluorinated greenhouse gases.
Certified data in EUROVENT

NX-N / CA			0604T	0704T	0804T	0904T	1004T	1104T	1204T
Power supply		V/ph/Hz	400/3/50	400/3/50	400/3/50	400/3/50	400/3/50	400/3/50	400/3/50
PERFORMANCE									
COOLING ONLY (GROSS VALUE)									
Cooling capacity	(1)	kW	164	191	222	253	283	310	335
Total power input	(1)	kW	55,7	64,6	73,8	85,3	96,0	105	113
EER	(1)	kW/kW	2,95	2,95	3,01	2,97	2,95	2,96	2,96
ESEER	(1)	kW/kW	4,13	4,25	4,22	4,25	4,22	4,16	4,18
COOLING ONLY (EN14511 VALUE)									
Cooling capacity	(1)(2)	kW	164	190	221	252	282	309	334
EER	(1)(2)	kW/kW	2,91	2,91	2,96	2,92	2,91	2,92	2,92
ESEER	(1)(2)	kW/kW	4,00	4,08	4,01	4,05	4,08	4,01	4,01
Cooling energy class			B	B	B	B	B	B	B
HEATING ONLY (GROSS VALUE)									
Total heating capacity	(3)	kW	171	199	238	266	293	329	350
Total power input	(3)	kW	53,0	61,5	73,1	82,0	90,6	102	108
COP	(3)	kW/kW	3,24	3,24	3,25	3,24	3,23	3,24	3,24
HEATING ONLY (EN14511 VALUE)									
Total heating capacity	(3)(2)	kW	172	200	239	267	294	330	351
COP	(3)(2)	kW/kW	3,21	3,21	3,21	3,21	3,21	3,21	3,21
Cooling energy class			A	A	A	A	A	A	A
ENERGY EFFICIENCY									
SEASONAL EFFICIENCY IN COOLING (Reg. EU 2016/2281)									
Ambient refrigeration									
Prated,c	(10)	kW	-	-	-	-	-	-	-
SEER	(10)(11)		-	-	-	-	-	-	-
Performance ηs	(10)(12)	%	-	-	-	-	-	-	-
SEASONAL EFFICIENCY IN HEATING (Reg. EU 813/2013)									
PDesign	(4)	kW	120	150	176	199	223	246	264
SCOP	(4)(13)		3,65	3,86	3,76	3,83	3,79	3,71	3,74
Performance ηs	(4)(14)	%	143	151	147	150	149	145	147
Seasonal efficiency class	(4)		-	-	-	-	-	-	-
EXCHANGERS									
HEAT EXCHANGER USER SIDE IN REFRIGERATION									
Water flow	(1)	l/s	7,85	9,12	10,63	12,11	13,54	14,83	16,03
Pressure drop	(1)	kPa	23,1	31,3	53,1	47,4	32,1	38,5	45,0
HEAT EXCHANGER USER SIDE IN HEATING									
Water flow	(3)	l/s	8,28	9,61	11,47	12,83	14,14	15,88	16,88
Pressure drop	(3)	kPa	25,7	34,7	61,7	53,1	35,0	44,1	49,9
REFRIGERANT CIRCUIT									
Compressors nr.		N°	4	4	4	4	4	4	4
No. Circuits		N°	2	2	2	2	2	2	2
Refrigerant charge		kg	56,2	74,8	96,0	94,0	96,8	126	126
NOISE LEVEL									
Sound Pressure	(5)	dB(A)	72	72	74	74	75	77	77
Sound power level in cooling	(6)(7)	dB(A)	92	92	94	94	95	97	97
Sound power level in heating	(6)(8)	dB(A)	92	92	94	94	95	97	97
SIZE AND WEIGHT									
Operating weight	(9)	kg	2070	2360	2750	2870	3150	3640	3660
A	(9)	mm	4110	4110	5110	5110	5110	6110	6110
B	(9)	mm	2220	2220	2220	2220	2220	2220	2220
H	(9)	mm	2150	2150	2150	2150	2150	2150	2150

Notes:
1 Plant (side) cooling exchanger water (in/out) 12°C/7°C; Source (side) heat exchanger air (in) 35°C.
2 Values in compliance with EN14511-3:2013.
3 Plant (side) heat exchanger water (in/out) 40°C/45°C; Source (side) heat exchanger air (in) 7°C - 87% R.H.
4 Seasonal space heating energy efficiency class LOW TEMPERATURE in AVERAGE climate conditions [REGULATION (EU) N. 813/2013]
5 Average sound pressure level at 1m distance, unit in a free field on a reflective surface; non-binding value calculated from the sound power level.
6 Sound power on the basis of measurements made in compliance with ISO 9614.
7 Sound power level in cooling, outdoors.
8 Sound power level in heating, outdoors.
9 Unit in standard configuration/execution, without optional accessories.
10 Seasonal energy efficiency of the cooling environment [REGULATION (EU) N. 2016/2281]
11 Seasonal space heating energy index
12 Seasonal energy efficiency of the space cooling
13 Seasonal performance coefficient
14 Seasonal space heating energy efficiency
The units highlighted in this publication contain HFC R410A [GWP_{100} 2088] fluorinated greenhouse gases.
Certified data in EUROVENT

NX-N / LN-CA			0604T	0704T	0804T	0904T	1004T	1104T	1204T
Power supply		V/ph/Hz	400/3/50	400/3/50	400/3/50	400/3/50	400/3/50	400/3/50	400/3/50
PERFORMANCE									
COOLING ONLY (GROSS VALUE)									
Cooling capacity	(1)	kW	159	187	216	248	277	300	325
Total power input	(1)	kW	53,8	62,5	70,8	82,3	93,7	101	109
EER	(1)	kW/kW	2,95	3,00	3,05	3,01	2,95	2,98	2,97
ESEER	(1)	kW/kW	4,30	4,31	4,32	4,31	4,28	4,30	4,26
COOLING ONLY (EN14511 VALUE)									
Cooling capacity	(1)(2)	kW	158	187	215	247	276	299	324
EER	(1)(2)	kW/kW	2,92	2,96	3,00	2,96	2,92	2,95	2,93
ESEER	(1)(2)	kW/kW	4,16	4,15	4,11	4,10	4,14	4,15	4,08
Cooling energy class			B	B	B	B	B	B	B
HEATING ONLY (GROSS VALUE)									
Total heating capacity	(3)	kW	170	207	239	275	304	329	358
Total power input	(3)	kW	51,9	64,1	73,2	84,7	93,9	101	110
COP	(3)	kW/kW	3,28	3,24	3,26	3,24	3,24	3,24	3,24
HEATING ONLY (EN14511 VALUE)									
Total heating capacity	(3)(2)	kW	170	208	240	276	305	330	360
COP	(3)(2)	kW/kW	3,25	3,21	3,22	3,21	3,21	3,22	3,21
Cooling energy class			A	A	A	A	A	A	A
ENERGY EFFICIENCY									
SEASONAL EFFICIENCY IN COOLING (Reg. EU 2016/2281)									
Ambient refrigeration									
Prated,c	(10)	kW	-	-	-	-	-	-	-
SEER	(10)(11)		-	-	-	-	-	-	-
Performance ηs	(10)(12)	%	-	-	-	-	-	-	-
SEASONAL EFFICIENCY IN HEATING (Reg. EU 813/2013)									
PDesign	(4)	kW	119	153	177	203	227	245	266
SCOP	(4)(13)		3,85	3,88	3,93	3,91	3,84	3,87	3,84
Performance ηs	(4)(14)	%	151	152	154	153	151	152	150
Seasonal efficiency class	(4)		-	-	-	-	-	-	-
EXCHANGERS									
HEAT EXCHANGER USER SIDE IN REFRIGERATION									
Water flow	(1)	l/s	7,59	8,96	10,33	11,85	13,22	14,37	15,53
Pressure drop	(1)	kPa	21,6	30,2	50,1	45,3	30,6	36,1	42,2
HEAT EXCHANGER USER SIDE IN HEATING									
Water flow	(3)	l/s	8,20	10,01	11,52	13,27	14,67	15,87	17,30
Pressure drop	(3)	kPa	25,3	37,7	62,3	56,8	37,6	44,1	52,3
REFRIGERANT CIRCUIT									
Compressors nr.		N°	4	4	4	4	4	4	4
No. Circuits		N°	2	2	2	2	2	2	2
Refrigerant charge		kg	56,2	74,8	96,0	94,0	96,8	126	126
NOISE LEVEL									
Sound Pressure	(5)	dB(A)	66	67	68	69	70	70	71
Sound power level in cooling	(6)(7)	dB(A)	86	87	88	89	90	90	91
Sound power level in heating	(6)(8)	dB(A)	87	88	89	90	91	91	92
SIZE AND WEIGHT									
Operating weight	(9)	kg	2070	2440	2750	2970	3250	3610	3740
A	(9)	mm	4110	4110	5110	5110	5110	6110	6110
B	(9)	mm	2220	2220	2220	2220	2220	2220	2220
H	(9)	mm	2150	2150	2150	2150	2150	2150	2150

Notes:
1 Plant (side) cooling exchanger water (in/out) 12°C/7°C; Source (side) heat exchanger air (in) 35°C.
2 Values in compliance with EN14511-3:2013.
3 Plant (side) heat exchanger water (in/out) 40°C/45°C; Source (side) heat exchanger air (in) 7°C - 87% R.H.
4 Seasonal space heating energy efficiency class LOW TEMPERATURE in AVERAGE climate conditions [REGULATION (EU) N. 813/2013]
5 Average sound pressure level at 1m distance, unit in a free field on a reflective surface; non-binding value calculated from the sound power level.
6 Sound power on the basis of measurements made in compliance with ISO 9614.
7 Sound power level in cooling, outdoors.
8 Sound power level in heating, outdoors.
9 Unit in standard configuration/execution, without optional accessories.
10 Seasonal energy efficiency of the cooling environment [REGULATION (EU) N. 2016/2281]
11 Seasonal space heating energy index
12 Seasonal energy efficiency of the space cooling
13 Seasonal performance coefficient
14 Seasonal space heating energy efficiency
The units highlighted in this publication contain HFC R410A [GWP_{100} 2088] fluorinated greenhouse gases.
Certified data in EUROVENT

NX-N / SL-CA			0604T	0704T	0804T	0904T	1004T	1104T	1204T
Power supply		V/ph/Hz	400/3/50	400/3/50	400/3/50	400/3/50	400/3/50	400/3/50	400/3/50
PERFORMANCE									
COOLING ONLY (GROSS VALUE)									
Cooling capacity	(1)	kW	158	185	216	245	275	299	324
Total power input	(1)	kW	53,5	62,9	71,0	82,7	92,8	101	110
EER	(1)	kW/kW	2,95	2,95	3,04	2,96	2,96	2,96	2,96
ESEER	(1)	kW/kW	4,34	4,41	4,38	4,40	4,34	4,32	4,28
COOLING ONLY (EN14511 VALUE)									
Cooling capacity	(1)(2)	kW	157	185	215	244	274	298	323
EER	(1)(2)	kW/kW	2,92	2,91	2,98	2,91	2,93	2,92	2,91
ESEER	(1)(2)	kW/kW	4,19	4,23	4,15	4,19	4,20	4,17	4,11
Cooling energy class			B	B	B	B	B	B	B
HEATING ONLY (GROSS VALUE)									
Total heating capacity	(3)	kW	169	203	238	268	299	325	356
Total power input	(3)	kW	51,2	62,6	73,2	82,7	92,1	101	110
COP	(3)	kW/kW	3,31	3,24	3,25	3,24	3,25	3,23	3,25
HEATING ONLY (EN14511 VALUE)									
Total heating capacity	(3)(2)	kW	170	204	239	270	300	326	357
COP	(3)(2)	kW/kW	3,28	3,21	3,21	3,21	3,23	3,21	3,22
Cooling energy class			A	A	A	A	A	A	A
ENERGY EFFICIENCY									
SEASONAL EFFICIENCY IN COOLING (Reg. EU 2016/2281)									
Ambient refrigeration									
Prated,c	(10)	kW	-	-	-	-	-	-	-
SEER	(10)(11)		-	-	-	-	-	-	-
Performance ηs	(10)(12)	%	-	-	-	-	-	-	-
SEASONAL EFFICIENCY IN HEATING (Reg. EU 813/2013)									
PDesign	(4)	kW	117	152	176	201	224	243	266
SCOP	(4)(13)		3,75	3,91	3,85	3,94	3,86	3,87	3,85
Performance ηs	(4)(14)	%	147	153	151	155	151	152	151
Seasonal efficiency class	(4)		-	-	-	-	-	-	-
EXCHANGERS									
HEAT EXCHANGER USER SIDE IN REFRIGERATION									
Water flow	(1)	l/s	7,54	8,87	10,31	11,70	13,14	14,28	15,50
Pressure drop	(1)	kPa	21,4	29,6	49,9	44,2	30,2	35,7	42,0
HEAT EXCHANGER USER SIDE IN HEATING									
Water flow	(3)	l/s	8,17	9,79	11,47	12,95	14,46	15,69	17,18
Pressure drop	(3)	kPa	25,1	36,0	61,8	54,1	36,6	43,1	51,6
REFRIGERANT CIRCUIT									
Compressors nr.		N°	4	4	4	4	4	4	4
No. Circuits		N°	2	2	2	2	2	2	2
Refrigerant charge		kg	56,2	74,8	96,0	94,0	126	126	126
NOISE LEVEL									
Sound Pressure	(5)	dB(A)	63	63	64	65	66	67	68
Sound power level in cooling	(6)(7)	dB(A)	83	83	84	85	86	87	88
Sound power level in heating	(6)(8)	dB(A)	84	84	85	86	87	88	89
SIZE AND WEIGHT									
Operating weight	(9)	kg	2150	2440	2850	2970	3550	3610	3740
A	(9)	mm	4110	4110	5110	5110	6110	6110	6110
B	(9)	mm	2220	2220	2220	2220	2220	2220	2220
H	(9)	mm	2150	2150	2150	2150	2150	2150	2150

Notes:
1 Plant (side) cooling exchanger water (in/out) 12°C/7°C; Source (side) heat exchanger air (in) 35°C.
2 Values in compliance with EN14511-3:2013.
3 Plant (side) heat exchanger water (in/out) 40°C/45°C; Source (side) heat exchanger air (in) 7°C - 87% R.H.
4 Seasonal space heating energy efficiency class LOW TEMPERATURE in AVERAGE climate conditions [REGULATION (EU) N. 813/2013]
5 Average sound pressure level at 1m distance, unit in a free field on a reflective surface; non-binding value calculated from the sound power level.
6 Sound power on the basis of measurements made in compliance with ISO 9614.
7 Sound power level in cooling, outdoors.
8 Sound power level in heating, outdoors.
9 Unit in standard configuration/execution, without optional accessories.
10 Seasonal energy efficiency of the cooling environment [REGULATION (EU) N. 2016/2281]
11 Seasonal space heating energy index
12 Seasonal energy efficiency of the space cooling
13 Seasonal performance coefficient
14 Seasonal space heating energy efficiency
The units highlighted in this publication contain HFC R410A [GWP_{100} 2088] fluorinated greenhouse gases.
Certified data in EUROVENT

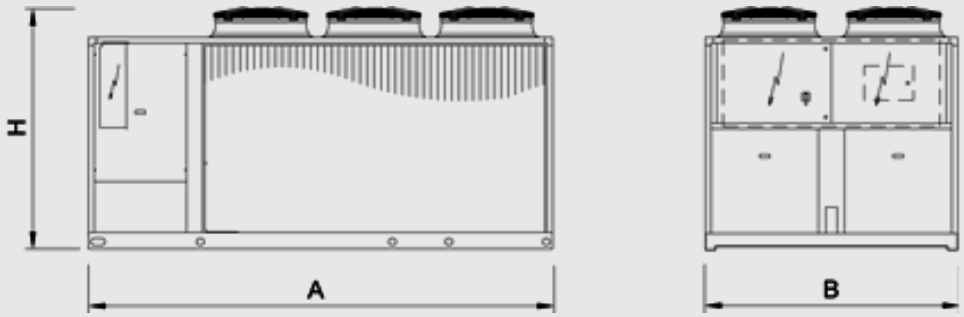

HEAT PUMPS

NECS-N 1314 - 3218

Reversible unit, air source for outdoor installation
320-833 kW



Outdoor heat pump for the production of chilled/hot water with hermetic rotary Scroll compressors, ozone-friendly refrigerant R410A, axial-flow fans, shell and tubes exchanger and electronic expansion valve. The range is composed by units equipped with four, six and eight compressors in multi-circuit configuration.

Version

B	Basic
SL	Super-low noise version
CA	High efficiency version

Configurations

-	Basic function
D	Partial condensing heat recovery function

Features

REFRIGERANT GAS R410A

The use of R410A allowed to achive better energy efficiencies with environment full respect (ODP = 0)

EXCHANGER

The shell and tube exchanger allows to achieve the highest flexibility on the unit's installation, keeping the efficiency at the maximum level. For this reason, NECS-N represents the best choice for all the hydronic application on the residential, commercial and industrial markets.

ELECTRONIC EXPANSION VALVE SUPPLIED STANDARD

The use of the electronic expansion valve generates considerable benefits, especially in cases of variable demand and different external conditions. It was introduced into these units as a result of accurate design choices concerning the cooling circuit and the optimisation of operation in various different working conditions

INTEGRATED HYDRONIC GROUP

The optional built-in hydronic module already contains the main water circuit components; it is available with single or twin in-line, for achieving both low or high head.

Accessory

- Soft starters
- Set-up for remote connectivity with ModBus, Echelon LonTalk, Bacnet protocol board
- Remote control keyboard (distance to 200m and to 500m)
- LT kit for extending the operating limits in heat pump mode down to -10 °C (/SL-CA versions) and -12 °C (/CA versions)

Controls

W3000SE Compact

The W3000SE Compact controller offers advanced functions and algorithms.
The keypad features an easy-to-use interface and a complete LCD display, allowing to consult and intervene on the unit by means of a multi-level menu, with selectable language setting.
The regulation is based on the exclusive QuickMind algorithm, including self-adaptive control logics, beneficial in low water content systems. As alternatives the proportional- or proportional-integral regulations are also available.
The diagnostics includes a complete alarm management, with the "black-box" and alarm logging functions for enhanced analysis of the unit operation.
For multiple units' systems, the regulation of the resources, via optional proprietary devices, can be implemented. Energy metering, for both consumption and capacity, can also be developed. Supervision can be easily developed via proprietary devices or the integration in third party systems by means of the most common protocols as ModBus, Bacnet, Bacnet-over-IP, Echelon LonWorks.
Compatibility with the remote keyboard managing up to 10 units.
Availability of an internal real time clock for operation scheduling (4-day profiles with 10 hour belts).
The defrost adopts a proprietary self-adaptive logic, which features the monitoring of numerous operational parameters. This allows to reduce the number and duration of the defrost cycles, with a benefit for the overall energy efficiency.



NECS-N / B			1314	1414	1616	1716	1816
Power supply		V/ph/Hz	400/3/50	400/3/50	400/3/50	400/3/50	400/3/50
PERFORMANCE							
COOLING ONLY (GROSS VALUE)							
Cooling capacity	(1)	kW	339	363	396	435	478
Total power input	(1)	kW	126	132	151	165	178
EER	(1)	kW/kW	2,69	2,75	2,62	2,64	2,69
ESEER	(1)	kW/kW	3,80	3,88	3,79	3,88	3,78
COOLING ONLY (EN14511 VALUE)							
Cooling capacity	(1)(2)	kW	338	362	395	434	476
EER	(1)(2)	kW/kW	2,64	2,72	2,58	2,61	2,65
ESEER	(1)(2)	kW/kW	3,64	3,73	3,64	3,74	3,64
Cooling energy class			D	C	D	D	D
HEATING ONLY (GROSS VALUE)							
Total heating capacity	(3)	kW	371	398	436	473	515
Total power input	(3)	kW	122	130	143	157	171
COP	(3)	kW/kW	3,03	3,07	3,05	3,01	3,02
HEATING ONLY (EN14511 VALUE)							
Total heating capacity	(3)(2)	kW	373	400	438	474	517
COP	(3)(2)	kW/kW	3,00	3,04	3,02	2,99	2,99
Cooling energy class			B	B	B	C	C
ENERGY EFFICIENCY							
SEASONAL EFFICIENCY IN COOLING (Reg. EU 2016/2281)							
Ambient refrigeration							
Prated,c	(10)	kW	-	-	-	-	-
SEER	(10)(11)		-	-	-	-	-
Performance ηs	(10)(12)	%	-	-	-	-	-
SEASONAL EFFICIENCY IN HEATING (Reg. EU 813/2013)							
PDesign	(4)	kW	274	311	358	373	387
SCOP	(4)(13)		3,47	3,54	3,44	3,59	3,49
Performance ηs	(4)(14)	%	136	139	134	141	137
Seasonal efficiency class	(4)		-	-	-	-	-
EXCHANGERS							
HEAT EXCHANGER USER SIDE IN REFRIGERATION							
Water flow	(1)	l/s	16,23	17,38	18,95	20,80	22,85
Pressure drop	(1)	kPa	49,5	43,4	51,7	35,3	42,6
HEAT EXCHANGER USER SIDE IN HEATING							
Water flow	(3)	l/s	17,91	19,21	21,03	22,83	24,84
Pressure drop	(3)	kPa	60,3	53,1	63,6	42,5	50,4
REFRIGERANT CIRCUIT							
Compressors nr.		N°	4	4	4	6	6
No. Circuits		N°	2	2	2	3	3
Refrigerant charge		kg	78,0	84,0	84,0	96,0	108
NOISE LEVEL							
Sound Pressure	(5)	dB(A)	76	76	76	76	76
Sound power level in cooling	(6)(7)	dB(A)	96	96	96	96	97
Sound power level in heating	(6)(8)	dB(A)	96	96	96	96	97
SIZE AND WEIGHT							
Operating weight	(9)	kg	3170	3250	3280	4220	4610
A	(9)	mm	3905	3905	3905	4515	5690
B	(9)	mm	2260	2260	2260	2260	2260
H	(9)	mm	2450	2450	2450	2450	2450

Notes:
1 Plant (side) cooling exchanger water (in/out) 12°C/7°C; Source (side) heat exchanger air (in) 35°C.
2 Values in compliance with EN14511-3:2013.
3 Plant (side) heat exchanger water (in/out) 40°C/45°C; Source (side) heat exchanger air (in) 7°C - 87% R.H.
4 Seasonal space heating energy efficiency class LOW TEMPERATURE in AVERAGE climate conditions [REGULATION (EU) N. 813/2013]
5 Average sound pressure level at 1m distance, unit in a free field on a reflective surface; non-binding value calculated from the sound power level.
6 Sound power on the basis of measurements made in compliance with ISO 9614.
7 Sound power level in cooling, outdoors.
8 Sound power level in heating, outdoors.
9 Unit in standard configuration/execution, without optional accessories.
10 Seasonal energy efficiency of the cooling environment [REGULATION (EU) N. 2016/2281]
11 Seasonal space heating energy index
12 Seasonal energy efficiency of the space cooling
13 Seasonal performance coefficient
14 Seasonal space heating energy efficiency
The units highlighted in this publication contain HFC R410A [GWP_{100} 2088] fluorinated greenhouse gases.
Certified data in EUROVENT

NECS-N / SL			1314	1414	1614	1716	1816	2016	2116
Power supply		V/ph/Hz	400/3/50	400/3/50	400/3/50	400/3/50	400/3/50	400/3/50	400/3/50
PERFORMANCE									
COOLING ONLY (GROSS VALUE)									
Cooling capacity	(1)	kW	320	343	383	413	445	493	516
Total power input	(1)	kW	131	138	154	170	185	200	207
EER	(1)	kW/kW	2,44	2,49	2,48	2,42	2,40	2,47	2,49
ESEER	(1)	kW/kW	3,99	4,00	3,97	4,05	3,99	4,07	4,06
COOLING ONLY (EN14511 VALUE)									
Cooling capacity	(1)(2)	kW	318	342	381	412	443	492	514
EER	(1)(2)	kW/kW	2,40	2,46	2,44	2,40	2,38	2,45	2,46
ESEER	(1)(2)	kW/kW	3,83	3,87	3,81	3,92	3,84	3,93	3,91
Cooling energy class			E	E	E	E	E	E	E
HEATING ONLY (GROSS VALUE)									
Total heating capacity	(3)	kW	368	390	442	474	513	564	586
Total power input	(3)	kW	117	125	139	152	164	180	188
COP	(3)	kW/kW	3,14	3,12	3,18	3,11	3,12	3,14	3,12
HEATING ONLY (EN14511 VALUE)									
Total heating capacity	(3)(2)	kW	370	392	444	476	515	566	588
COP	(3)(2)	kW/kW	3,11	3,09	3,14	3,09	3,09	3,11	3,10
Cooling energy class			B	B	B	B	B	B	B
ENERGY EFFICIENCY									
SEASONAL EFFICIENCY IN COOLING (Reg. EU 2016/2281)									
Ambient refrigeration									
Prated,c	(10)	kW	-	-	-	-	-	-	-
SEER	(10)(11)		-	-	-	-	-	-	-
Performance ηs	(10)(12)	%	-	-	-	-	-	-	-
SEASONAL EFFICIENCY IN HEATING (Reg. EU 813/2013)									
PDesign	(4)	kW	221	254	350	282	390	352	380
SCOP	(4)(13)		3,54	3,58	3,65	3,55	3,77	3,61	3,59
Performance ηs	(4)(14)	%	139	140	143	139	148	141	140
Seasonal efficiency class	(4)		-	-	-	-	-	-	-
EXCHANGERS									
HEAT EXCHANGER USER SIDE IN REFRIGERATION									
Water flow	(1)	l/s	15,28	16,41	18,31	19,73	21,26	23,58	24,66
Pressure drop	(1)	kPa	43,9	38,7	48,2	31,8	36,9	34,6	37,8
HEAT EXCHANGER USER SIDE IN HEATING									
Water flow	(3)	l/s	17,78	18,85	21,33	22,90	24,76	27,23	28,28
Pressure drop	(3)	kPa	59,4	51,1	65,4	42,8	50,0	46,1	49,8
REFRIGERANT CIRCUIT									
Compressors nr.		N°	4	4	4	6	6	6	6
No. Circuits		N°	2	2	2	3	3	3	3
Refrigerant charge		kg	84,0	84,0	96,0	114	126	126	126
NOISE LEVEL									
Sound Pressure	(5)	dB(A)	68	68	68	68	68	69	69
Sound power level in cooling	(6)(7)	dB(A)	88	88	88	89	89	90	90
Sound power level in heating	(6)(8)	dB(A)	89	89	89	90	90	91	91
SIZE AND WEIGHT									
Operating weight	(9)	kg	3400	3530	3680	4720	4860	5160	5270
A	(9)	mm	4515	5080	5080	5690	5690	6865	7430
B	(9)	mm	2260	2260	2260	2260	2260	2260	2260
H	(9)	mm	2450	2450	2450	2450	2450	2450	2450

Notes:
1 Plant (side) cooling exchanger water (in/out) 12°C/7°C; Source (side) heat exchanger air (in) 35°C.
2 Values in compliance with EN14511-3:2013.
3 Plant (side) heat exchanger water (in/out) 40°C/45°C; Source (side) heat exchanger air (in) 7°C - 87% R.H.
4 Seasonal space heating energy efficiency class LOW TEMPERATURE in AVERAGE climate conditions [REGULATION (EU) N. 813/2013]
5 Average sound pressure level at 1m distance, unit in a free field on a reflective surface; non-binding value calculated from the sound power level.
6 Sound power on the basis of measurements made in compliance with ISO 9614.
7 Sound power level in cooling, outdoors.
8 Sound power level in heating, outdoors.
9 Unit in standard configuration/execution, without optional accessories.
10 Seasonal energy efficiency of the cooling environment [REGULATION (EU) N. 2016/2281]
11 Seasonal space heating energy index
12 Seasonal energy efficiency of the space cooling
13 Seasonal performance coefficient
14 Seasonal space heating energy efficiency
The units highlighted in this publication contain HFC R410A [GWP_{100} 2088] fluorinated greenhouse gases.
Certified data in EUROVENT

NECS-N / CA			1314	1414	1614	1716	1816	2016	2116
Power supply		V/ph/Hz	400/3/50	400/3/50	400/3/50	400/3/50	400/3/50	400/3/50	400/3/50
PERFORMANCE									
COOLING ONLY (GROSS VALUE)									
Cooling capacity	(1)	kW	352	372	417	453	504	538	559
Total power input	(1)	kW	121	128	143	155	173	185	192
EER	(1)	kW/kW	2,90	2,91	2,91	2,91	2,92	2,91	2,92
ESEER	(1)	kW/kW	4,12	4,20	4,07	4,19	4,08	4,18	4,17
COOLING ONLY (EN14511 VALUE)									
Cooling capacity	(1)(2)	kW	350	370	415	452	502	536	557
EER	(1)(2)	kW/kW	2,85	2,87	2,86	2,88	2,88	2,87	2,88
ESEER	(1)(2)	kW/kW	3,93	4,02	3,87	4,03	3,90	4,01	4,00
Cooling energy class			C	C	C	C	C	C	C
HEATING ONLY (GROSS VALUE)									
Total heating capacity	(3)	kW	383	409	449	497	533	586	614
Total power input	(3)	kW	120	128	140	155	166	183	191
COP	(3)	kW/kW	3,21	3,20	3,21	3,21	3,21	3,21	3,21
HEATING ONLY (EN14511 VALUE)									
Total heating capacity	(3)(2)	kW	385	411	452	499	535	589	617
COP	(3)(2)	kW/kW	3,17	3,17	3,18	3,18	3,18	3,19	3,18
Cooling energy class			B	B	B	B	B	B	B
ENERGY EFFICIENCY									
SEASONAL EFFICIENCY IN COOLING (Reg. EU 2016/2281)									
Ambient refrigeration									
Prated,c	(10)	kW	-	-	-	-	-	536	557
SEER	(10)(11)		-	-	-	-	-	4,18	4,17
Performance ηs	(10)(12)	%	-	-	-	-	-	164	164
SEASONAL EFFICIENCY IN HEATING (Reg. EU 813/2013)									
PDesign	(4)	kW	275	309	353	368	381	-	-
SCOP	(4)(13)		3,65	3,73	3,63	3,78	3,68	-	-
Performance ηs	(4)(14)	%	143	146	142	148	144	-	-
Seasonal efficiency class	(4)		-	-	-	-	-	-	-
EXCHANGERS									
HEAT EXCHANGER USER SIDE IN REFRIGERATION									
Water flow	(1)	l/s	16,82	17,78	19,93	21,67	24,12	25,71	26,73
Pressure drop	(1)	kPa	53,2	45,5	57,1	38,4	47,5	41,1	44,4
HEAT EXCHANGER USER SIDE IN HEATING									
Water flow	(3)	l/s	18,50	19,76	21,68	23,98	25,74	28,31	29,64
Pressure drop	(3)	kPa	64,3	56,2	67,6	46,9	54,1	49,9	54,7
REFRIGERANT CIRCUIT									
Compressors nr.		N°	4	4	4	6	6	6	6
No. Circuits		N°	2	2	2	3	3	3	3
Refrigerant charge		kg	90,0	96,0	96,0	126	126	138	144
NOISE LEVEL									
Sound Pressure	(5)	dB(A)	77	77	77	76	77	77	77
Sound power level in cooling	(6)(7)	dB(A)	97	97	97	97	98	98	98
Sound power level in heating	(6)(8)	dB(A)	97	97	97	97	98	0	0
SIZE AND WEIGHT									
Operating weight	(9)	kg	3490	3580	3610	4840	5120	5270	5350
A	(9)	mm	5080	5080	5080	6255	7430	7430	7430
B	(9)	mm	2260	2260	2260	2260	2260	2260	2260
H	(9)	mm	2450	2450	2450	2450	2450	2450	2450

Notes:
1 Plant (side) cooling exchanger water (in/out) 12°C/7°C; Source (side) heat exchanger air (in) 35°C.
2 Values in compliance with EN14511-3:2013.
3 Plant (side) heat exchanger water (in/out) 40°C/45°C; Source (side) heat exchanger air (in) 7°C - 87% R.H.
4 Seasonal space heating energy efficiency class LOW TEMPERATURE in AVERAGE climate conditions [REGULATION (EU) N. 813/2013]
5 Average sound pressure level at 1m distance, unit in a free field on a reflective surface; non-binding value calculated from the sound power level.
6 Sound power on the basis of measurements made in compliance with ISO 9614.
7 Sound power level in cooling, outdoors.
8 Sound power level in heating, outdoors.
9 Unit in standard configuration/execution, without optional accessories.
10 Seasonal energy efficiency of the cooling environment [REGULATION (EU) N. 2016/2281]
11 Seasonal space heating energy index
12 Seasonal energy efficiency of the space cooling
13 Seasonal performance coefficient
14 Seasonal space heating energy efficiency
The units highlighted in this publication contain HFC R410A [GWP_{100} 2088] fluorinated greenhouse gases.

NECS-N / CA			2416	2418	2618	2818	3018	3218
Power supply		V/ph/Hz	400/3/50	400/3/50	400/3/50	400/3/50	400/3/50	400/3/50
PERFORMANCE								
COOLING ONLY (GROSS VALUE)								
Cooling capacity	(1)	kW	625	667	710	745	789	833
Total power input	(1)	kW	215	228	242	256	270	287
EER	(1)	kW/kW	2,91	2,92	2,93	2,92	2,92	2,91
ESEER	(1)	kW/kW	4,09	4,09	4,14	4,18	4,17	4,09
COOLING ONLY (EN14511 VALUE)								
Cooling capacity	(1)(2)	kW	622	664	707	743	787	830
EER	(1)(2)	kW/kW	2,87	2,88	2,88	2,88	2,89	2,86
ESEER	(1)(2)	kW/kW	3,92	3,92	3,94	4,02	4,00	3,91
Cooling energy class			C	C	C	C	C	C
HEATING ONLY (GROSS VALUE)								
Total heating capacity	(3)	kW	674	708	766	819	860	898
Total power input	(3)	kW	210	221	239	255	269	280
COP	(3)	kW/kW	3,21	3,20	3,20	3,21	3,20	3,21
HEATING ONLY (EN14511 VALUE)								
Total heating capacity	(3)(2)	kW	676	711	770	822	863	902
COP	(3)(2)	kW/kW	3,18	3,17	3,17	3,19	3,17	3,18
Cooling energy class			B	B	B	B	B	B
ENERGY EFFICIENCY								
SEASONAL EFFICIENCY IN COOLING (Reg. EU 2016/2281)								
Ambient refrigeration								
Prated,c	(10)	kW	622	664	707	743	787	830
SEER	(10)(11)		4,11	4,10	4,11	4,17	4,18	4,11
Performance ηs	(10)(12)	%	161	161	162	164	164	161
SEASONAL EFFICIENCY IN HEATING (Reg. EU 813/2013)								
PDesign	(4)	kW	-	-	-	-	-	-
SCOP	(4)(13)		-	-	-	-	-	-
Performance ηs	(4)(14)	%	-	-	-	-	-	-
Seasonal efficiency class	(4)		-	-	-	-	-	-
EXCHANGERS								
HEAT EXCHANGER USER SIDE IN REFRIGERATION								
Water flow	(1)	l/s	29,88	31,88	33,93	35,65	37,75	39,84
Pressure drop	(1)	kPa	47,4	48,7	55,2	41,2	46,2	51,4
HEAT EXCHANGER USER SIDE IN HEATING								
Water flow	(3)	l/s	32,52	34,20	36,99	39,53	41,51	43,36
Pressure drop	(3)	kPa	56,2	56,1	65,6	50,6	55,8	60,9
REFRIGERANT CIRCUIT								
Compressors nr.		N°	6	8	8	8	8	8
No. Circuits		N°	3	4	4	4	4	4
Refrigerant charge		kg	144	168	180	192	192	192
NOISE LEVEL								
Sound Pressure	(5)	dB(A)	78	77	77	78	78	78
Sound power level in cooling	(6)(7)	dB(A)	99	99	99	100	100	100
Sound power level in heating	(6)(8)	dB(A)	0	0	0	0	0	0
SIZE AND WEIGHT								
Operating weight	(9)	kg	5400	6610	6760	6940	6970	7000
A	(9)	mm	7430	9780	9780	9780	9780	9780
B	(9)	mm	2260	2260	2260	2260	2260	2260
H	(9)	mm	2450	2450	2450	2450	2450	2450

Notes:
1 Plant (side) cooling exchanger water (in/out) 12°C/7°C; Source (side) heat exchanger air (in) 35°C.
2 Values in compliance with EN14511-3:2013.
3 Plant (side) heat exchanger water (in/out) 40°C/45°C; Source (side) heat exchanger air (in) 7°C - 87% R.H.
4 Seasonal space heating energy efficiency class LOW TEMPERATURE in AVERAGE climate conditions [REGULATION (EU) N. 813/2013]
5 Average sound pressure level at 1m distance, unit in a free field on a reflective surface; non-binding value calculated from the sound power level.
6 Sound power on the basis of measurements made in compliance with ISO 9614.
7 Sound power level in cooling, outdoors.
8 Sound power level in heating, outdoors.
9 Unit in standard configuration/execution, without optional accessories.
10 Seasonal energy efficiency of the cooling environment [REGULATION (EU) N. 2016/2281]
11 Seasonal space heating energy index
12 Seasonal energy efficiency of the space cooling
13 Seasonal performance coefficient
14 Seasonal space heating energy efficiency
The units highlighted in this publication contain HFC R410A [GWP_{100} 2088] fluorinated greenhouse gases.
Certified data in EUROVENT

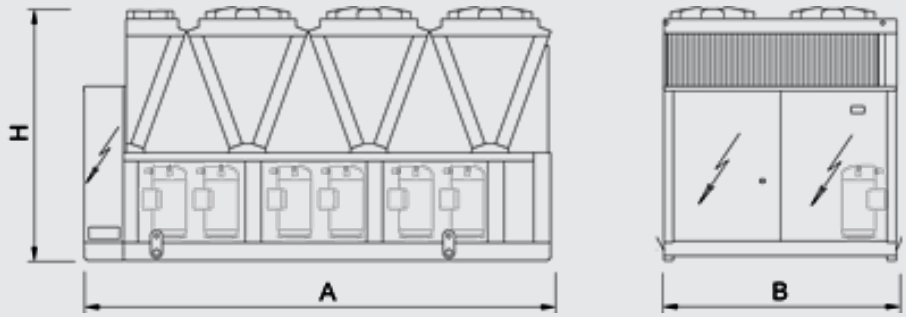

HEAT PUMPS

FOCS-N 2022 - 4822

Reversible unit, air source for outdoor installation
441-1162 kW



Version

B	Basic
CA	Class A of efficiency
LN-CA	Low Noise, Class A of efficiency
SL-CA	Super Low noise version, Class A of efficiency

Configurations

-	Basic function
D	Partial condensing heat recovery function

Features

HIGH EFFICIENCY
Unit in Class A as per Eurovent (in heating). High efficiency for low energy consumption during the operating hours.
COMPACTNESS
Reduced dimensions, for easy installation even in sites with space´ constraints
WIDE OPERATING RANGE
Unit´s operation guaranteed with external air temperature down to -10 °C during winter and up to 46 °C during summer.
HOT WATER SUPPLY
Supply of hot water in use up to 55°C, offering maximum versatility with respect to different plant engineering solutions

Accessory

- Hydronic group
- VPF (Variable Primary Flow) kit: variable flow pumps with on board regulation
- Electronic expansion valve
- Set-up for remote connectivity with ModBus/Echelon protocol cards

Outdoor heat pump unit for the production of chilled/hot water with semi-hermetic screw compressors optimized for R134a, axial-flow fans, external coil with copper tubes and aluminium fines, shell and tubes heat exchanger designed by Climaveneta and electronic expansion valve.
Base and supporting structure and panels are galvanized epoxy powder coated steel with increased thickness.
These units are designed for two-pipes systems and are able to produce hot or cold water according to the selected operation mode; the precise thermoregulation guarantees an optimal response to load´s changes, in every operating conditions.

Controls

W3000SE Large
The W3000SE Large controller offers advanced functions and algorithms.
The keypad features an easy-to-use interface and a complete LCD display, allowing to consult and intervene on the unit by means of a multi-level menu, with selectable language setting.
The regulation features the continuous modulation of capacity, based on a dynamic dead band and referring to the leaving water temperature. As alternative, step-wise regulation is also available, referred to the return water temperature with selectable proportional- or proportional-integral logic.
The diagnostics includes a complete alarm management, with the "black-box" and alarm logging functions for enhanced analysis of the unit operation.
For multiple units' systems, the regulation of the resources, via optional proprietary devices, can be implemented. Energy metering, for both consumption and capacity, can also be developed. Supervision can be easily developed via proprietary devices or the integration in third party systems by means of the most common protocols as ModBus, Bacnet, Bacnet-over-IP, Echelon LonWorks.
Compatibility with the remote keyboard managing up to 10 units.
Availability of an internal real time clock for operation scheduling (4-day profiles with 10 hour belts).
The defrost adopts a proprietary self-adaptive logic, which features the monitoring of numerous operational parameters. This allows to reduce the number and duration of the defrost cycles, with a benefit for the overall energy efficiency.



FOCS-N / B			2022	2222	2422	2722	3222	3622	4222	4822
Power supply		V/ph/Hz	400/3/50	400/3/50	400/3/50	400/3/50	400/3/50	400/3/50	400/3/50	400/3/50
PERFORMANCE										
COOLING ONLY (GROSS VALUE)										
Cooling capacity	(1)	kW	450	494	531	663	791	916	1029	1146
Total power input	(1)	kW	163	177	187	225	267	293	337	382
EER	(1)	kW/kW	2,76	2,79	2,85	2,95	2,96	3,13	3,06	3,00
ESEER	(1)	kW/kW	3,71	3,75	3,81	4,06	3,94	3,98	4,06	4,01
COOLING ONLY (EN14511 VALUE)										
Cooling capacity	(1)(2)	kW	448	493	529	661	789	914	1026	1143
EER	(1)(2)	kW/kW	2,73	2,76	2,81	2,92	2,93	3,10	3,02	2,97
ESEER	(1)(2)	kW/kW	3,61	3,64	3,69	4,50	4,42	4,40	4,53	4,46
Cooling energy class			C	C	C	B	B	B	B	B
HEATING ONLY (GROSS VALUE)										
Total heating capacity	(3)	kW	479	524	566	699	824	946	1073	1195
Total power input	(3)	kW	152	166	178	211	247	277	316	356
COP	(3)	kW/kW	3,14	3,15	3,18	3,32	3,33	3,41	3,40	3,36
HEATING ONLY (EN14511 VALUE)										
Total heating capacity	(3)(2)	kW	480	525	568	701	826	948	1077	1199
COP	(3)(2)	kW/kW	3,12	3,13	3,16	3,30	3,31	3,39	3,37	3,34
Cooling energy class			B	B	B	A	A	A	A	A
ENERGY EFFICIENCY										
SEASONAL EFFICIENCY IN COOLING (Reg. EU 2016/2281)										
Ambient refrigeration										
Prated,c	(10)	kW	-	-	-	661	789	914	1026	1143
SEER	(10)(11)		-	-	-	4,18	4,10	4,14	4,24	4,18
Performance ηs	(10)(12)	%	-	-	-	164	161	162	166	164
SEASONAL EFFICIENCY IN HEATING (Reg. EU 813/2013)										
PDesign	(4)	kW	336	362	399	-	-	-	-	-
SCOP	(4)(13)		3,20	3,20	3,20	-	-	-	-	-
Performance ηs	(4)(14)	%	125	125	125	-	-	-	-	-
Seasonal efficiency class	(4)		-	-	-	-	-	-	-	-
EXCHANGERS										
HEAT EXCHANGER USER SIDE IN REFRIGERATION										
Water flow	(1)	l/s	21,50	23,62	25,39	31,69	37,82	43,81	49,20	54,80
Pressure drop	(1)	kPa	30,0	33,3	38,4	32,5	36,7	33,3	42,3	37,0
HEAT EXCHANGER USER SIDE IN HEATING										
Water flow	(3)	l/s	23,10	25,28	27,35	33,72	39,77	45,66	51,78	57,69
Pressure drop	(3)	kPa	34,6	38,1	44,6	36,8	40,6	36,2	46,9	41,0
REFRIGERANT CIRCUIT										
Compressors nr.		N°	2	2	2	2	2	2	2	2
No. Circuits		N°	2	2	2	2	2	2	2	2
Refrigerant charge		kg	159	176	185	233	256	294	355	355
NOISE LEVEL										
Sound Pressure	(5)	dB(A)	79	80	80	80	81	80	82	81
Sound power level in cooling	(6)(7)	dB(A)	99	101	101	101	102	102	104	104
Sound power level in heating	(6)(8)	dB(A)	99	101	101	0	0	0	0	0
SIZE AND WEIGHT										
Operating weight	(9)	kg	5900	6330	6420	7290	9390	10400	10700	11310
A	(9)	mm	4900	5800	5800	7000	7900	10000	10000	11800
B	(9)	mm	2260	2260	2260	2260	2260	2260	2260	2260
H	(9)	mm	2430	2430	2430	2430	2430	2430	2430	2430

Notes:
1 Plant (side) cooling exchanger water (in/out) 12°C/7°C; Source (side) heat exchanger air (in) 35°C.
2 Values in compliance with EN14511-3:2013.
3 Plant (side) heat exchanger water (in/out) 40°C/45°C; Source (side) heat exchanger air (in) 7°C - 87% R.H.
4 Seasonal space heating energy efficiency class LOW TEMPERATURE in AVERAGE climate conditions [REGULATION (EU) N. 813/2013]
5 Average sound pressure level at 1m distance, unit in a free field on a reflective surface; non-binding value calculated from the sound power level.
6 Sound power on the basis of measurements made in compliance with ISO 9614.
7 Sound power level in cooling, outdoors.
8 Sound power level in heating, outdoors.
9 Unit in standard configuration/execution, without optional accessories.
10 Seasonal energy efficiency of the cooling environment [REGULATION (EU) N. 2016/2281]
11 Seasonal space heating energy index
12 Seasonal energy efficiency of the space cooling
13 Seasonal performance coefficient
14 Seasonal space heating energy efficiency
The units highlighted in this publication contain HFC R134a [GWP_{100} 1430] fluorinated greenhouse gases.
Certified data in EUROVENT

FOCS-N / CA			2022	2222	2422	2622	2722	3222	3622	4222	4822
Power supply		V/ph/Hz	400/3/50	400/3/50	400/3/50	400/3/50	400/3/50	400/3/50	400/3/50	400/3/50	400/3/50
PERFORMANCE											
COOLING ONLY (GROSS VALUE)											
Cooling capacity	(1)	kW	460	503	538	586	672	803	929	1041	1162
Total power input	(1)	kW	158	170	181	202	218	259	285	336	370
EER	(1)	kW/kW	2,91	2,96	2,97	2,91	3,08	3,10	3,26	3,10	3,14
ESEER	(1)	kW/kW	3,88	3,89	3,91	3,96	4,37	4,22	4,24	4,25	4,28
COOLING ONLY (EN14511 VALUE)											
Cooling capacity	(1)(2)	kW	458	501	536	585	670	801	926	1038	1159
EER	(1)(2)	kW/kW	2,88	2,93	2,93	2,88	3,05	3,06	3,22	3,06	3,10
ESEER	(1)(2)	kW/kW	3,77	3,79	3,79	3,86	4,23	4,08	4,12	4,10	4,15
Cooling energy class			C	B	B	C	B	B	A	B	A
HEATING ONLY (GROSS VALUE)											
Total heating capacity	(3)	kW	470	520	553	590	683	804	923	1051	1166
Total power input	(3)	kW	143	156	167	177	197	232	258	300	333
COP	(3)	kW/kW	3,28	3,33	3,31	3,33	3,46	3,47	3,57	3,50	3,50
HEATING ONLY (EN14511 VALUE)											
Total heating capacity	(3)(2)	kW	472	522	555	591	684	807	925	1054	1169
COP	(3)(2)	kW/kW	3,26	3,31	3,28	3,31	3,44	3,44	3,55	3,47	3,48
Cooling energy class			A	A	A	A	A	A	A	A	A
ENERGY EFFICIENCY											
SEASONAL EFFICIENCY IN COOLING (Reg. EU 2016/2281)											
Ambient refrigeration											
Prated,c	(10)	kW	-	-	-	-	670	801	926	1038	1159
SEER	(10)(11)		-	-	-	-	4,32	4,23	4,29	4,29	4,34
Performance ηs	(10)(12)	%	-	-	-	-	170	166	168	168	171
SEASONAL EFFICIENCY IN HEATING (Reg. EU 813/2013)											
PDesign	(4)	kW	339	368	400	390	-	-	-	-	-
SCOP	(4)(13)		3,44	3,46	3,50	3,61	-	-	-	-	-
Performance ηs	(4)(14)	%	134	135	137	141	-	-	-	-	-
Seasonal efficiency class	(4)		-	-	-	-	-	-	-	-	-
EXCHANGERS											
HEAT EXCHANGER USER SIDE IN REFRIGERATION											
Water flow	(1)	l/s	21,98	24,05	25,72	28,02	32,11	38,39	44,42	49,77	55,59
Pressure drop	(1)	kPa	31,3	34,5	39,4	26,5	33,4	37,8	34,3	43,3	38,0
HEAT EXCHANGER USER SIDE IN HEATING											
Water flow	(3)	l/s	22,70	25,11	26,70	28,47	32,95	38,83	44,55	50,74	56,29
Pressure drop	(3)	kPa	33,4	37,6	42,5	27,3	35,2	38,7	34,5	45,0	39,0
REFRIGERANT CIRCUIT											
Compressors nr.		N°	2	2	2	2	2	2	2	2	2
No. Circuits		N°	2	2	2	2	2	2	2	2	2
Refrigerant charge		kg	171	191	198	209	249	282	321	321	387
NOISE LEVEL											
Sound Pressure	(5)	dB(A)	79	80	80	80	80	81	80	81	81
Sound power level in cooling	(6)(7)	dB(A)	99	101	101	101	101	102	102	104	104
Sound power level in heating	(6)(8)	dB(A)	99	101	101	0	0	0	0	0	0
SIZE AND WEIGHT											
Operating weight	(9)	kg	6050	6630	6710	6950	7480	9620	10650	11260	11690
A	(9)	mm	4900	5800	5800	5800	7000	7900	10000	11800	11800
B	(9)	mm	2260	2260	2260	2260	2260	2260	2260	2260	2260
H	(9)	mm	2430	2430	2430	2430	2430	2430	2430	2430	2430

Notes:
1 Plant (side) cooling exchanger water (in/out) 12°C/7°C; Source (side) heat exchanger air (in) 35°C.
2 Values in compliance with EN14511-3:2013.
3 Plant (side) heat exchanger water (in/out) 40°C/45°C; Source (side) heat exchanger air (in) 7°C - 87% R.H.
4 Seasonal space heating energy efficiency class LOW TEMPERATURE in AVERAGE climate conditions [REGULATION (EU) N. 813/2013]
5 Average sound pressure level at 1m distance, unit in a free field on a reflective surface; non-binding value calculated from the sound power level.
6 Sound power on the basis of measurements made in compliance with ISO 9614.
7 Sound power level in cooling, outdoors.
8 Sound power level in heating, outdoors.
9 Unit in standard configuration/execution, without optional accessories.
10 Seasonal energy efficiency of the cooling environment [REGULATION (EU) N. 2016/2281]
11 Seasonal space heating energy index
12 Seasonal energy efficiency of the space cooling
13 Seasonal performance coefficient
14 Seasonal space heating energy efficiency
The units highlighted in this publication contain HFC R134a [GWP_{100} 1430] fluorinated greenhouse gases.
Certified data in EUROVENT

FOCS-N / LN-CA			2022	2222	2422	2622	2722	3222	3622	4222	4822
Power supply		V/ph/Hz	400/3/50	400/3/50	400/3/50	400/3/50	400/3/50	400/3/50	400/3/50	400/3/50	400/3/50
PERFORMANCE											
COOLING ONLY (GROSS VALUE)											
Cooling capacity	(1)	kW	444	492	524	564	654	780	904	1013	1130
Total power input	(1)	kW	160	169	182	205	219	262	283	334	372
EER	(1)	kW/kW	2,78	2,91	2,87	2,75	2,99	2,98	3,19	3,03	3,04
ESEER	(1)	kW/kW	3,86	3,92	3,92	3,93	4,33	4,20	4,22	4,23	4,27
COOLING ONLY (EN14511 VALUE)											
Cooling capacity	(1)(2)	kW	443	491	523	563	653	777	901	1010	1127
EER	(1)(2)	kW/kW	2,75	2,88	2,84	2,72	2,96	2,95	3,16	3,00	3,01
ESEER	(1)(2)	kW/kW	3,76	3,81	3,80	3,85	4,21	4,08	4,11	4,10	4,14
Cooling energy class			C	C	C	C	B	B	A	B	B
HEATING ONLY (GROSS VALUE)											
Total heating capacity	(3)	kW	467	520	553	586	683	804	923	1051	1166
Total power input	(3)	kW	143	156	167	177	197	232	258	300	333
COP	(3)	kW/kW	3,26	3,33	3,31	3,30	3,46	3,47	3,57	3,50	3,50
HEATING ONLY (EN14511 VALUE)											
Total heating capacity	(3)(2)	kW	468	522	555	587	684	807	925	1054	1169
COP	(3)(2)	kW/kW	3,24	3,31	3,28	3,29	3,44	3,44	3,55	3,47	3,48
Cooling energy class			A	A	A	A	A	A	A	A	A
ENERGY EFFICIENCY											
SEASONAL EFFICIENCY IN COOLING (Reg. EU 2016/2281)											
Ambient refrigeration											
Prated,c	(10)	kW	-	-	-	-	653	777	901	1010	1127
SEER	(10)(11)		-	-	-	-	4,31	4,20	4,26	4,26	4,31
Performance ηs	(10)(12)	%	-	-	-	-	169	165	167	167	169
SEASONAL EFFICIENCY IN HEATING (Reg. EU 813/2013)											
PDesign	(4)	kW	336	368	400	387	-	-	-	-	-
SCOP	(4)(13)		3,41	3,46	3,50	3,58	-	-	-	-	-
Performance ηs	(4)(14)	%	134	135	137	140	-	-	-	-	-
Seasonal efficiency class	(4)		-	-	-	-	-	-	-	-	-
EXCHANGERS											
HEAT EXCHANGER USER SIDE IN REFRIGERATION											
Water flow	(1)	l/s	21,25	23,53	25,07	26,97	31,30	37,28	43,21	48,44	54,04
Pressure drop	(1)	kPa	29,3	33,0	37,5	24,5	31,7	35,7	32,4	41,1	36,0
HEAT EXCHANGER USER SIDE IN HEATING											
Water flow	(3)	l/s	22,54	25,11	26,70	28,27	32,95	38,83	44,55	50,74	56,29
Pressure drop	(3)	kPa	32,9	37,6	42,5	26,9	35,2	38,7	34,5	45,0	39,0
REFRIGERANT CIRCUIT											
Compressors nr.		N°	2	2	2	2	2	2	2	2	2
No. Circuits		N°	2	2	2	2	2	2	2	2	2
Refrigerant charge		kg	171	191	198	209	249	282	321	321	387
NOISE LEVEL											
Sound Pressure	(5)	dB(A)	73	74	74	74	74	75	74	75	75
Sound power level in cooling	(6)(7)	dB(A)	93	95	95	95	95	96	96	98	98
Sound power level in heating	(6)(8)	dB(A)	94	96	96	0	0	0	0	0	0
SIZE AND WEIGHT											
Operating weight	(9)	kg	6120	6610	6700	6930	7580	9730	10800	11400	11860
A	(9)	mm	4900	5800	5800	5800	7000	7900	10000	11800	11800
B	(9)	mm	2260	2260	2260	2260	2260	2260	2260	2260	2260
H	(9)	mm	2430	2430	2430	2430	2430	2430	2430	2430	2430

Notes:
1 Plant (side) cooling exchanger water (in/out) 12°C/7°C; Source (side) heat exchanger air (in) 35°C.
2 Values in compliance with EN14511-3:2013.
3 Plant (side) heat exchanger water (in/out) 40°C/45°C; Source (side) heat exchanger air (in) 7°C - 87% R.H.
4 Seasonal space heating energy efficiency class LOW TEMPERATURE in AVERAGE climate conditions [REGULATION (EU) N. 813/2013]
5 Average sound pressure level at 1m distance, unit in a free field on a reflective surface; non-binding value calculated from the sound power level.
6 Sound power on the basis of measurements made in compliance with ISO 9614.
7 Sound power level in cooling, outdoors.
8 Sound power level in heating, outdoors.
9 Unit in standard configuration/execution, without optional accessories.
10 Seasonal energy efficiency of the cooling environment [REGULATION (EU) N. 2016/2281]
11 Seasonal space heating energy index
12 Seasonal energy efficiency of the space cooling
13 Seasonal performance coefficient
14 Seasonal space heating energy efficiency
The units highlighted in this publication contain HFC R134a [GWP_{100} 1430] fluorinated greenhouse gases.
Certified data in EUROVENT

FOCS-N / SL-CA			2022	2222	2422	2622	2722	3222	3622	4222	4822
Power supply		V/ph/Hz	400/3/50	400/3/50	400/3/50	400/3/50	400/3/50	400/3/50	400/3/50	400/3/50	400/3/50
PERFORMANCE											
COOLING ONLY (GROSS VALUE)											
Cooling capacity	(1)	kW	441	488	520	559	649	772	895	1004	1119
Total power input	(1)	kW	163	172	185	209	221	265	285	336	375
EER	(1)	kW/kW	2,71	2,84	2,81	2,68	2,93	2,92	3,14	2,99	2,98
ESEER	(1)	kW/kW	3,84	3,91	3,91	3,93	4,24	4,08	4,13	4,13	4,16
COOLING ONLY (EN14511 VALUE)											
Cooling capacity	(1)(2)	kW	440	487	518	557	647	769	893	1001	1116
EER	(1)(2)	kW/kW	2,69	2,81	2,78	2,66	2,90	2,89	3,11	2,95	2,95
ESEER	(1)(2)	kW/kW	3,74	3,81	3,79	3,84	4,72	4,59	4,59	4,62	4,65
Cooling energy class			D	C	C	D	B	C	A	B	B
HEATING ONLY (GROSS VALUE)											
Total heating capacity	(3)	kW	461	514	546	578	674	794	911	1039	1151
Total power input	(3)	kW	142	154	166	175	194	229	254	296	328
COP	(3)	kW/kW	3,25	3,33	3,30	3,30	3,47	3,47	3,58	3,51	3,51
HEATING ONLY (EN14511 VALUE)											
Total heating capacity	(3)(2)	kW	462	516	548	579	676	797	913	1042	1154
COP	(3)(2)	kW/kW	3,23	3,31	3,28	3,28	3,44	3,45	3,56	3,49	3,49
Cooling energy class			A	A	A	A	A	A	A	A	A
ENERGY EFFICIENCY											
SEASONAL EFFICIENCY IN COOLING (Reg. EU 2016/2281)											
Ambient refrigeration											
Prated,c	(10)	kW	-	-	-	-	647	769	893	1001	1116
SEER	(10)(11)		-	-	-	-	4,32	4,19	4,27	4,28	4,31
Performance ηs	(10)(12)	%	-	-	-	-	170	165	168	168	170
SEASONAL EFFICIENCY IN HEATING (Reg. EU 813/2013)											
PDesign	(4)	kW	337	368	361	389	-	-	-	-	-
SCOP	(4)(13)		3,44	3,49	3,46	3,61	-	-	-	-	-
Performance ηs	(4)(14)	%	135	137	135	142	-	-	-	-	-
Seasonal efficiency class	(4)		-	-	-	-	-	-	-	-	-
EXCHANGERS											
HEAT EXCHANGER USER SIDE IN REFRIGERATION											
Water flow	(1)	l/s	21,08	23,33	24,85	26,71	31,02	36,90	42,80	48,01	53,53
Pressure drop	(1)	kPa	28,8	32,5	36,8	24,0	31,2	34,9	31,8	40,3	35,3
HEAT EXCHANGER USER SIDE IN HEATING											
Water flow	(3)	l/s	22,25	24,83	26,37	27,90	32,55	38,34	43,96	50,17	55,56
Pressure drop	(3)	kPa	32,1	36,8	41,5	26,2	34,3	37,7	33,6	44,0	38,0
REFRIGERANT CIRCUIT											
Compressors nr.		N°	2	2	2	2	2	2	2	2	2
No. Circuits		N°	2	2	2	2	2	2	2	2	2
Refrigerant charge		kg	171	191	198	209	249	282	321	321	387
NOISE LEVEL											
Sound Pressure	(5)	dB(A)	69	70	70	70	70	71	70	71	71
Sound power level in cooling	(6)(7)	dB(A)	89	91	91	91	91	92	92	94	94
Sound power level in heating	(6)(8)	dB(A)	90	92	0	0	0	0	0	0	0
SIZE AND WEIGHT											
Operating weight	(9)	kg	6190	6680	6770	7010	7650	9820	10890	11510	11950
A	(9)	mm	4900	5800	5800	5800	7000	7900	10000	11800	11800
B	(9)	mm	2260	2260	2260	2260	2260	2260	2260	2260	2260
H	(9)	mm	2430	2430	2430	2430	2430	2430	2430	2430	2430

Notes:
1 Plant (side) cooling exchanger water (in/out) 12°C/7°C; Source (side) heat exchanger air (in) 35°C.
2 Values in compliance with EN14511-3:2013.
3 Plant (side) heat exchanger water (in/out) 40°C/45°C; Source (side) heat exchanger air (in) 7°C - 87% R.H.
4 Seasonal space heating energy efficiency class LOW TEMPERATURE in AVERAGE climate conditions [REGULATION (EU) N. 813/2013]
5 Average sound pressure level at 1m distance, unit in a free field on a reflective surface; non-binding value calculated from the sound power level.
6 Sound power on the basis of measurements made in compliance with ISO 9614.
7 Sound power level in cooling, outdoors.
8 Sound power level in heating, outdoors.
9 Unit in standard configuration/execution, without optional accessories.
10 Seasonal energy efficiency of the cooling environment [REGULATION (EU) N. 2016/2281]
11 Seasonal space heating energy index
12 Seasonal energy efficiency of the space cooling
13 Seasonal performance coefficient
14 Seasonal space heating energy efficiency
The units highlighted in this publication contain HFC R134a [GWP_{100} 1430] fluorinated greenhouse gases.
Certified data in EUROVENT

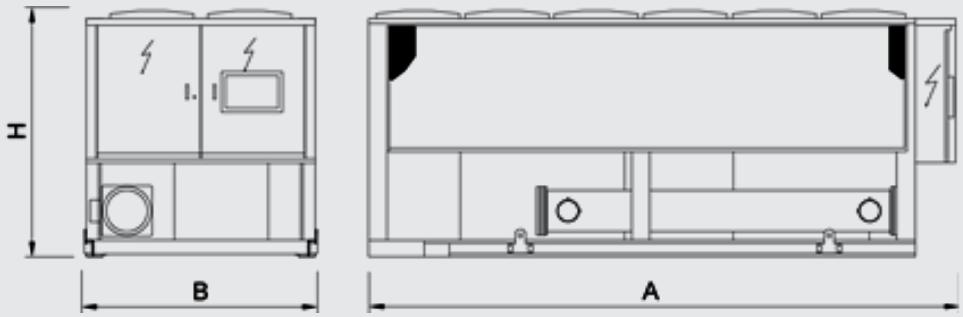

HEAT PUMPS

MICS-CN 0072 - 0122

Reversible unit, air source for indoor installation 17,3-30,3 kW



Version

FF Basic version, with built-in hydronic kit

Features

Structure and base in hot-dip galvanised steel with epoxy powder paint finish.
High efficiency, low pressure drop AISI 316 stainless steel plate heat exchangers, fitted with heating element to provide frost protection.
Control with foolproof device accessible from the outside.
Finned coils made with copper pipes and aluminium fins with large exchange surface area, tested for leaks with dried air at 30 bar.
User interface with display.
Electronic expansion valve
Available water pipe fittings in case of installation under appliance
The circuit includes:

- Multistage centrifugal pump
- Air vent valve
- Differential pressure switch.
- Expansion tank
- Safety valve
- Pressure gauge
- Drain valve.

The full range is also available with the Class A efficiency rating (in heating).

Accessory

- Rubber anti-vibration mounting kit
- Removable metal mesh water filter kit
- Coil protection grids
- Remote control kit

MICS-CN is the Climaveneta range air-cooled heat pumps with gas R410A. These are indoor units that, thanks to the ducted centrifugal fans, may also be installed outdoors. They are fitted with hermetic Scroll compressors and Full Floating technology. The latter is an intelligent electronic unit providing the perfect answer to residential market requirements: compactness, ease of installation and quietness.

Controls

Full Floating technology
The new generation electronic controller allows to manage the chiller by using the Full Floating technology, designed by Climaveneta for improving the system´s efficiency for the fans (Floating Fans), for the circulating pump (Floating Flow) and finally for the working temperature (Floating Setpoint). This also allows to achieve all the following benefits: improvement of efficiency in both standard and extreme conditions, much lower operating noise in part load conditions, lower installation time, lower time for system set-up, broader operating limits, faster transient after defrosts.

MICS-CN / FF			0072	0092	0122
Power supply		V/ph/Hz	400/3/50	400/3/50	400/3/50
PERFORMANCE					
COOLING ONLY (GROSS VALUE)					
Cooling capacity	(1)	kW	17,3	21,8	30,3
Total power input	(1)	kW	6,50	9,30	10,7
EER	(1)	kW/kW	2,66	2,34	2,83
ESEER	(1)	kW/kW	3,86	3,75	3,78
COOLING ONLY (EN14511 VALUE)					
Cooling capacity	(1)(2)	kW	17,4	21,9	30,4
EER	(1)(2)	kW/kW	2,77	2,44	3,16
ESEER	(1)(2)	kW/kW	4,27	4,09	4,80
Cooling energy class			A	C	A
HEATING ONLY (GROSS VALUE)					
Total heating capacity	(3)	kW	20,2	26,1	33,9
Total power input	(3)	kW	6,50	8,60	11,2
COP	(3)	kW/kW	3,11	3,03	3,03
HEATING ONLY (EN14511 VALUE)					
Total heating capacity	(3)(2)	kW	20,1	26,0	33,8
COP	(3)(2)	kW/kW	3,20	3,14	3,32
Cooling energy class			A	A	A
ENERGY EFFICIENCY					
SEASONAL EFFICIENCY IN COOLING (Reg. EU 2016/2281)					
Ambient refrigeration					
Prated,c	(10)	kW	-	-	-
SEER	(10)(11)		-	-	-
Performance ηs	(10)(12)	%	-	-	-
SEASONAL EFFICIENCY IN HEATING (Reg. EU 813/2013)					
PDesign	(4)	kW	14,6	18,0	24,8
SCOP	(4)(13)		3,27	3,36	3,60
Performance ηs	(4)(14)	%	128	132	141
Seasonal efficiency class	(4)		A+	A+	A+
EXCHANGERS					
HEAT EXCHANGER USER SIDE IN REFRIGERATION					
Water flow	(1)	l/s	0,83	1,04	1,45
Available unit's head	(1)	kPa	134	150	111
HEAT EXCHANGER USER SIDE IN HEATING					
Water flow	(3)	l/s	0,98	1,26	1,64
Available unit's head	(3)	kPa	102	122	86,7
REFRIGERANT CIRCUIT					
Compressors nr.		N°	2	2	2
No. Circuits		N°	1	1	1
Refrigerant charge		kg	6,60	6,90	11,0
FANS					
Air flow		m³/s	2,50	2,50	5,00
Available static pressure		Pa	120	120	120
NOISE LEVEL					
Sound power level in cooling	(5)(6)	dB(A)	86	86	89
Sound power level in heating	(5)(7)	dB(A)	86	86	89
Sound power level in heating	(5)(8)	dB(A)	78	78	78
SIZE AND WEIGHT					
A	(9)	mm	1040	1040	1630
B	(9)	mm	790	790	790
H	(9)	mm	2000	2000	2000
Operating weight	(9)	kg	350	370	480

Notes:
1 Plant (side) cooling exchanger water (in/out) 12°C/7°C; Source (side) heat exchanger air (in) 35°C.
2 Values in compliance with EN14511-3:2013.
3 Plant (side) heat exchanger water (in/out) 40°C/45°C; Source (side) heat exchanger air (in) 7°C - 87% R.H.
4 Seasonal space heating energy efficiency class LOW TEMPERATURE in AVERAGE climate conditions [REGULATION (EU) N. 813/2013]
5 Total sound power of fans, as declared by the maker, at the rated speed of rotation and a useful static head of nominal on the delivery side.
6 Sound power level in cooling, indoors.
7 Sound power level in heating, indoors.
8 Sound power level in heating, outdoors.
9 Unit in standard configuration/execution, without optional accessories.
10 Seasonal energy efficiency of the cooling environment [REGULATION (EU) N. 2016/2281]
11 Seasonal space heating energy index
12 Seasonal energy efficiency of the space cooling
13 Seasonal performance coefficient
14 Seasonal space heating energy efficiency
The units highlighted in this publication contain HFC R410A [GWP_{100} 2088] fluorinated greenhouse gases.
Certified data in EUROVENT

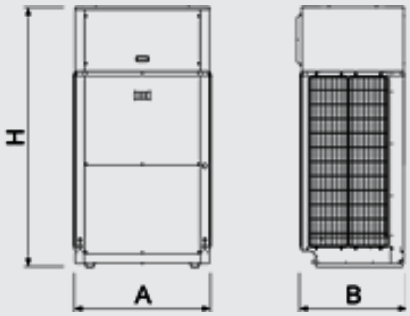

HEAT PUMPS

NX-CN 0072 - 1104

Reversible unit, air source for indoor installation
18,0-265 kW



Heat pump for indoor installation to produce chilled/hot water with hermetic rotary Scroll compressors, centrifugal plug fans with EC motor, braze-welded plate-type exchanger and thermal expansion valve.
Structure and the external paneling made from hot-galvanised metal plate and painted with epoxy powder coat RAL 7035. The panels are easy to remove for quick and easy access to the inside components from either side of the unit.
The range includes the single-circuit two-compressor versions and the dual circuit four-compressor versions.

Version

K	Standard efficiency
SL-K	Super low noise, standard efficiency
A	High efficiency

Configurations

-	Basic function
D	Partial condensing heat recovery function

Features

HIGH EFFICIENCY

Very high efficiency at full and partial load, at the highest market levels, thanks to the adopted technological solutions. These units ensure low operating costs and therefore a quick payback time.

ErP READY

The highest level of efficiency at part load can meet and exceed the minimum seasonal efficiency for heating, SCOP according with the eco-sustainable design requirements for all products using energy.

PLUG FUN WITH EC MOTOR

More air flow by smaller diameter.
Energy cost saving by highest efficiency at the operating point.
Fan is directly coupling with motor, no energy lost due to the transmission (belts and pulleys). External rotor fitted with permanent magnets. Outstanding efficiency even at partial load range, due to the lack of brushes and lower consumption in every working condition in order to achieve a better seasonal efficiency in accordance with ErP Directive.

TOTAL VERSATILITY

Horizontal or vertical air flow.

INTEGRATED HYDRONIC MODULE

The built-in hydronic module already contains the main water circuit components; it is available as option with single or twin in-line pump, for achieving low or high head, fixed or variable speed.

Accessory

- Soft starters
- Set-up for remote connectivity with ModBus, Echelon, Bacnet, Bacnet over-IP.
- Outside air temperature probe for plant water set point compensation.
- Horizontal or vertical air outflow
- Hydronic module available in different configurations with 1 or 2 pumps fixed speed or variable speed, for achieving both low or high head.
- VPF (Variable Primary Flow) system
- Electronic expansion valve

Controls

Electronic control W3000TE

The brand new W3000TE controller offers advanced functions and algorithms.
The keypad W3000 Compact, as standard equipment, features function controls and a complete LCD display for viewing data and activating the unit, via a multilevel menu, with settable display language. In addition to or as an alternative at Compact keyboard, the KIPlink - Keyboard In Your Pocket - is the innovative user interface based on WiFi technology that allows one to operate on the unit directly from the smartphone or tablet.
The controller provides water temperature control for the heating systems, cooling systems (only for reversible units), as well as for domestic hot water (only for reversible units). These different temperatures are managed automatically based on the different conditions in which the system operates, with the possibility to assign specific levels of priority to domestic hot water production, depending on the needs of the application.
The regulation is based on the exclusive QuickMind algorithm, including self-adaptive control logics, beneficial in low water content systems. As alternatives, the proportional- or proportional- integral regulations are also available.
Diagnostics include complete alarm management, with “blackbox” functions (via PC) and alarm log (display or PC) for best analysis of unit behaviour.
For multiple units’ systems, the regulation of the resources, via optional proprietary devices, can be implemented. Energy metering, for both consumption and capacity, can also be developed.
The built-in clock can be used to create an operating profile containing up to 4 typical days and 10 time bands, essential for efficient programming of energy production and fundamental for managing the Legionella prevention cycles.
Supervision is available with different options, using proprietary devices or by integration into third party systems using ModBus, BACnet, BACnet-over-IP and Echelon LonWorks protocols.
A dedicated wall-mounted keypad can be used for remote control of all the functions.
Optionally (VPF package), capacity modulation can be integrated with hydraulic flow modulation, thanks to inverter-driven pumps and to specific resources for the hydraulic circuit.



NX-CN /K			0072	0092	0102	0122	0152	0182	0202	0232
Power supply		V/ph/Hz	400/3/50	400/3/50	400/3/50	400/3/50	400/3/50	400/3/50	400/3/50	400/3/50
PERFORMANCE										
COOLING ONLY (GROSS VALUE)										
Cooling capacity	(1)	kW	18,4	22,6	25,8	30,3	38,0	44,9	51,7	57,7
Total power input	(1)	kW	6,27	8,33	9,75	11,6	12,8	14,8	17,7	20,4
EER	(1)	kW/kW	2,93	2,71	2,65	2,61	2,97	3,03	2,92	2,83
ESEER	(1)	kW/kW	4,41	4,19	4,10	3,18	4,25	4,26	4,18	4,10
COOLING ONLY (EN14511 VALUE)										
Cooling capacity	(1)(2)	kW	18,3	22,5	25,7	30,2	37,8	44,7	51,5	57,5
EER	(1)(2)	kW/kW	2,94	2,71	2,66	2,62	2,98	3,06	2,94	2,84
ESEER	(1)(2)	kW/kW	4,29	4,09	4,03	3,14	4,17	4,21	4,14	4,05
Cooling energy class			A	A	B	B	A	A	A	A
HEATING ONLY (GROSS VALUE)										
Total heating capacity	(3)	kW	19,2	23,9	28,0	31,8	41,5	48,4	55,6	61,7
Total power input	(3)	kW	6,86	8,85	10,6	12,1	13,8	16,0	18,6	21,1
COP	(3)	kW/kW	2,80	2,70	2,64	2,63	3,01	3,03	2,99	2,92
HEATING ONLY (EN14511 VALUE)										
Total heating capacity	(3)(2)	kW	19,3	24,0	28,1	31,9	41,7	48,6	55,8	61,9
COP	(3)(2)	kW/kW	2,83	2,72	2,67	2,65	3,04	3,06	3,02	2,95
Cooling energy class			B	C	C	C	A	A	A	B
ENERGY EFFICIENCY										
SEASONAL EFFICIENCY IN COOLING (Reg. EU 2016/2281)										
Ambient refrigeration										
Prated,c	(10)	kW	-	-	-	-	-	-	-	-
SEER	(10)(11)		-	-	-	-	-	-	-	-
Performance ηs	(10)(12)	%	-	-	-	-	-	-	-	-
SEASONAL EFFICIENCY IN HEATING (Reg. EU 813/2013)										
PDesign	(4)	kW	14,5	17,9	21,4	24,5	32,1	37,5	43,0	47,9
SCOP	(4)(13)		3,56	3,53	3,52	3,46	3,71	3,71	3,67	3,64
Performance ηs	(4)(14)	%	140	138	138	136	145	145	144	142
Seasonal efficiency class	(4)		A+	A+	A+	A+	A+	A+	A+	A+
EXCHANGERS										
HEAT EXCHANGER USER SIDE IN REFRIGERATION										
Water flow	(1)	l/s	0,88	1,08	1,23	1,45	1,81	2,15	2,47	2,76
Pressure drop	(1)	kPa	16,7	18,2	16,6	18,3	19,1	16,6	17,3	17,1
HEAT EXCHANGER USER SIDE IN HEATING										
Water flow	(3)	l/s	0,92	1,15	1,35	1,53	2,00	2,34	2,69	2,98
Pressure drop	(3)	kPa	18,6	20,7	20,1	20,4	23,2	19,6	20,4	19,9
REFRIGERANT CIRCUIT										
Compressors nr.		N°	2	2	2	2	2	2	2	2
No. Circuits		N°	1	1	1	1	1	1	1	1
Refrigerant charge		kg	8,20	8,50	8,90	9,10	19,0	20,2	21,1	21,5
FANS										
Air flow		m³/s	2,08	2,50	3,33	3,47	4,44	5,42	5,69	5,97
Available static pressure		Pa	30	30	30	30	30	30	30	30
NOISE LEVEL										
Sound power level in cooling	(5)(6)(15)	dB(A)	80	81	82	82	81	84	85	86
Sound power level in heating	(5)(7)(15)	dB(A)	70	70	70	70	80	80	81	80
Sound power level in heating	(5)(8)(15)	dB(A)	80	81	82	82	81	84	85	86
SIZE AND WEIGHT										
A	(9)	mm	1500	1500	1500	1500	2480	2480	2480	2480
B	(9)	mm	900	900	900	900	1100	1100	1100	1100
H	(9)	mm	1910	1910	1910	1910	2100	2100	2100	2100
Operating weight	(9)	kg	410	420	450	460	860	930	930	960

Notes:
1 Plant (side) cooling exchanger water (in/out) 12°C/7°C; Source (side) heat exchanger air (in) 35°C.
2 Values in compliance with EN14511-3:2013.
3 Plant (side) heat exchanger water (in/out) 40°C/45°C; Source (side) heat exchanger air (in) 7°C - 87% R.H.
4 Seasonal space heating energy efficiency class LOW TEMPERATURE in AVERAGE climate conditions [REGULATION (EU) N. 813/2013]
5 Total sound power of fans, as declared by the maker, at the rated speed of rotation and a useful static head of nominal on the delivery side.
6 Sound power level in cooling, outdoors.
7 Sound power level in heating, indoors.
8 Sound power level in heating, outdoors.
9 Unit in standard configuration/execution, without optional accessories.
10 Seasonal energy efficiency of the cooling environment [REGULATION (EU) N. 2016/2281]
11 Seasonal space heating energy index
12 Seasonal energy efficiency of the space cooling
13 Seasonal performance coefficient
14 Seasonal space heating energy efficiency
15 Sound power on the basis of measurements made in compliance with ISO 9614.
The units highlighted in this publication contain HFC R410A [GWP_{100} 2088] fluorinated greenhouse gases.

NX-CN /K			0272	0302	0352	0402	0452	0502	0552	0602
Power supply		V/ph/Hz	400/3/50	400/3/50	400/3/50	400/3/50	400/3/50	400/3/50	400/3/50	400/3/50
PERFORMANCE										
COOLING ONLY (GROSS VALUE)										
Cooling capacity	(1)	kW	66,1	74,9	85,0	94,5	107	121	136	151
Total power input	(1)	kW	23,8	27,3	32,3	35,4	40,7	44,2	52,3	59,8
EER	(1)	kW/kW	2,78	2,74	2,63	2,67	2,62	2,74	2,60	2,53
ESEER	(1)	kW/kW	4,09	3,93	3,82	3,83	3,78	3,91	3,76	3,70
COOLING ONLY (EN14511 VALUE)										
Cooling capacity	(1)(2)	kW	65,9	74,7	84,8	94,3	107	121	136	151
EER	(1)(2)	kW/kW	2,80	2,76	2,65	2,69	2,64	2,76	2,62	2,55
ESEER	(1)(2)	kW/kW	4,06	3,92	3,79	3,83	3,76	3,90	3,74	3,68
Cooling energy class			A	A	B	B	B	A	B	B
HEATING ONLY (GROSS VALUE)										
Total heating capacity	(3)	kW	70,7	79,5	89,4	102	115	131	147	163
Total power input	(3)	kW	24,3	28,0	32,7	36,6	41,2	45,2	52,9	60,4
COP	(3)	kW/kW	2,91	2,84	2,73	2,79	2,78	2,90	2,78	2,70
HEATING ONLY (EN14511 VALUE)										
Total heating capacity	(3)(2)	kW	70,9	79,7	89,6	102	115	131	147	163
COP	(3)(2)	kW/kW	2,94	2,87	2,76	2,82	2,81	2,93	2,81	2,72
Cooling energy class			B	B	C	B	B	B	B	C
ENERGY EFFICIENCY										
SEASONAL EFFICIENCY IN COOLING (Reg. EU 2016/2281)										
Ambient refrigeration										
Prated,c	(10)	kW	-	-	-	-	-	-	-	-
SEER	(10)(11)		-	-	-	-	-	-	-	-
Performance ηs	(10)(12)	%	-	-	-	-	-	-	-	-
SEASONAL EFFICIENCY IN HEATING (Reg. EU 813/2013)										
PDesign	(4)	kW	54,9	61,7	69,1	78,7	88,2	101	113	126
SCOP	(4)(13)		3,55	3,49	3,40	3,42	3,40	3,56	3,47	3,33
Performance ηs	(4)(14)	%	139	137	133	134	133	139	136	130
Seasonal efficiency class	(4)		A+	A+	A+	-	-	-	-	-
EXCHANGERS										
HEAT EXCHANGER USER SIDE IN REFRIGERATION										
Water flow	(1)	l/s	3,16	3,58	4,07	4,52	5,11	5,79	6,50	7,24
Pressure drop	(1)	kPa	12,9	12,6	13,5	13,2	13,5	13,3	14,3	14,9
HEAT EXCHANGER USER SIDE IN HEATING										
Water flow	(3)	l/s	3,41	3,84	4,31	4,93	5,53	6,33	7,09	7,86
Pressure drop	(3)	kPa	15,1	14,4	15,2	15,7	15,8	15,9	17,0	17,6
REFRIGERANT CIRCUIT										
Compressors nr.		N°	2	2	2	2	2	2	2	2
No. Circuits		N°	1	1	1	1	1	1	1	1
Refrigerant charge		kg	27,1	23,6	24,6	32,2	33,0	38,9	39,9	40,8
FANS										
Air flow		m³/s	7,50	8,06	8,89	10,56	11,11	12,50	13,89	15,83
Available static pressure		Pa	30	30	30	30	30	30	30	30
NOISE LEVEL										
Sound power level in cooling	(5)(6)(15)	dB(A)	84	85	87	87	84	90	92	90
Sound power level in heating	(5)(7)(15)	dB(A)	80	80	80	82	83	83	84	85
Sound power level in heating	(5)(8)(15)	dB(A)	84	85	87	87	84	90	92	90
SIZE AND WEIGHT										
A	(9)	mm	2480	2480	2480	2980	2980	3970	3970	3970
B	(9)	mm	1100	1100	1100	1260	1260	1260	1260	1260
H	(9)	mm	2100	2100	2100	2100	2100	2100	2100	2100
Operating weight	(9)	kg	1010	1050	1130	1320	1340	1600	1620	1700

Notes:
1 Plant (side) cooling exchanger water (in/out) 12°C/7°C; Source (side) heat exchanger air (in) 35°C.
2 Values in compliance with EN14511-3:2013.
3 Plant (side) heat exchanger water (in/out) 40°C/45°C; Source (side) heat exchanger air (in) 7°C - 87% R.H.
4 Seasonal space heating energy efficiency class LOW TEMPERATURE in AVERAGE climate conditions [REGULATION (EU) N. 813/2013]
5 Total sound power of fans, as declared by the maker, at the rated speed of rotation and a useful static head of nominal on the delivery side.
6 Sound power level in cooling, outdoors.
7 Sound power level in heating, indoors.
8 Sound power level in heating, outdoors.
9 Unit in standard configuration/execution, without optional accessories.
10 Seasonal energy efficiency of the cooling environment [REGULATION (EU) N. 2016/2281]
11 Seasonal space heating energy index
12 Seasonal energy efficiency of the space cooling
13 Seasonal performance coefficient
14 Seasonal space heating energy efficiency
15 Sound power on the basis of measurements made in compliance with ISO 9614.
The units highlighted in this publication contain HFC R410A [GWP_{100} 2088] fluorinated greenhouse gases.

NX-CN /K			0702	0524	0604	0704	0804	0904	1004	1104
Power supply		V/ph/Hz	400/3/50	400/3/50	400/3/50	400/3/50	400/3/50	400/3/50	400/3/50	400/3/50
PERFORMANCE										
COOLING ONLY (GROSS VALUE)										
Cooling capacity	(1)	kW	173	125	144	167	187	217	241	265
Total power input	(1)	kW	66,4	47,3	56,5	63,9	74,4	81,8	93,2	108
EER	(1)	kW/kW	2,61	2,64	2,55	2,62	2,51	2,65	2,59	2,45
ESEER	(1)	kW/kW	3,79	4,05	3,92	4,07	3,89	4,06	3,96	3,92
COOLING ONLY (EN14511 VALUE)										
Cooling capacity	(1)(2)	kW	173	124	144	167	186	216	240	265
EER	(1)(2)	kW/kW	2,63	2,65	2,56	2,63	2,53	2,67	2,60	2,46
ESEER	(1)(2)	kW/kW	3,77	3,96	3,83	4,00	3,82	3,99	3,89	3,86
Cooling energy class			B	B	B	B	B	B	B	C
HEATING ONLY (GROSS VALUE)										
Total heating capacity	(3)	kW	187	135	157	180	199	231	256	283
Total power input	(3)	kW	65,3	48,2	57,4	65,1	74,8	82,9	93,3	105
COP	(3)	kW/kW	2,87	2,80	2,73	2,76	2,66	2,79	2,74	2,70
HEATING ONLY (EN14511 VALUE)										
Total heating capacity	(3)(2)	kW	188	135	157	180	200	232	257	284
COP	(3)(2)	kW/kW	2,90	2,83	2,76	2,79	2,69	2,82	2,77	2,72
Cooling energy class			B	B	C	C	C	B	C	C
ENERGY EFFICIENCY										
SEASONAL EFFICIENCY IN COOLING (Reg. EU 2016/2281)										
Ambient refrigeration										
Prated,c	(10)	kW	-	-	-	-	-	-	-	-
SEER	(10)(11)		-	-	-	-	-	-	-	-
Performance ηs	(10)(12)	%	-	-	-	-	-	-	-	-
SEASONAL EFFICIENCY IN HEATING (Reg. EU 813/2013)										
PDesign	(4)	kW	144	105	122	139	153	178	196	218
SCOP	(4)(13)		3,46	3,62	3,51	3,56	3,44	3,55	3,55	3,52
Performance ηs	(4)(14)	%	135	142	137	139	135	139	139	138
Seasonal efficiency class	(4)		-	-	-	-	-	-	-	-
EXCHANGERS										
HEAT EXCHANGER USER SIDE IN REFRIGERATION										
Water flow	(1)	l/s	8,28	5,97	6,89	8,00	8,94	10,37	11,53	12,69
Pressure drop	(1)	kPa	15,5	19,6	19,6	19,9	19,9	20,4	20,5	19,6
HEAT EXCHANGER USER SIDE IN HEATING										
Water flow	(3)	l/s	9,03	6,52	7,56	8,69	9,61	11,16	12,36	13,67
Pressure drop	(3)	kPa	18,5	23,4	23,7	23,5	23,0	23,5	23,5	22,8
REFRIGERANT CIRCUIT										
Compressors nr.		N°	2	4	4	4	4	4	4	4
No. Circuits		N°	1	2	2	2	2	2	2	2
Refrigerant charge		kg	51,4	43,0	44,3	51,5	53,5	68,5	71,0	72,8
FANS										
Air flow		m³/s	18,06	13,06	15,28	17,78	19,44	22,50	24,17	24,17
Available static pressure		Pa	30	30	30	30	30	30	30	30
NOISE LEVEL										
Sound power level in cooling	(5)(6)(15)	dB(A)	94	91	90	94	96	91	93	93
Sound power level in heating	(5)(7)(15)	dB(A)	85	85	85	86	86	88	90	93
Sound power level in heating	(5)(8)(15)	dB(A)	94	91	90	94	96	91	93	93
SIZE AND WEIGHT										
A	(9)	mm	4670	3970	3970	4670	4670	5670	5670	5670
B	(9)	mm	1260	1260	1260	1260	1260	1260	1260	1260
H	(9)	mm	2100	2100	2100	2100	2100	2100	2100	2100
Operating weight	(9)	kg	1880	1590	1690	2000	2150	2570	2620	2680

Notes:
1 Plant (side) cooling exchanger water (in/out) 12°C/7°C; Source (side) heat exchanger air (in) 35°C.
2 Values in compliance with EN14511-3:2013.
3 Plant (side) heat exchanger water (in/out) 40°C/45°C; Source (side) heat exchanger air (in) 7°C - 87% R.H.
4 Seasonal space heating energy efficiency class LOW TEMPERATURE in AVERAGE climate conditions [REGULATION (EU) N. 813/2013]
5 Total sound power of fans, as declared by the maker, at the rated speed of rotation and a useful static head of nominal on the delivery side.
6 Sound power level in cooling, outdoors.
7 Sound power level in heating, indoors.
8 Sound power level in heating, outdoors.
9 Unit in standard configuration/execution, without optional accessories.
10 Seasonal energy efficiency of the cooling environment [REGULATION (EU) N. 2016/2281]
11 Seasonal space heating energy index
12 Seasonal energy efficiency of the space cooling
13 Seasonal performance coefficient
14 Seasonal space heating energy efficiency
15 Sound power on the basis of measurements made in compliance with ISO 9614.
The units highlighted in this publication contain HFC R410A [GWP_{100} 2088] fluorinated greenhouse gases.
Certified data in EUROVENT

NX-CN /SL-K			0072	0092	0102	0122	0152	0182	0202	0232
Power supply		V/ph/Hz	400/3/50	400/3/50	400/3/50	400/3/50	400/3/50	400/3/50	400/3/50	400/3/50
PERFORMANCE										
COOLING ONLY (GROSS VALUE)										
Cooling capacity	(1)	kW	18,0	22,0	24,5	28,6	37,0	43,9	50,8	56,2
Total power input	(1)	kW	6,12	8,03	9,28	11,1	12,5	14,4	17,2	19,8
EER	(1)	kW/kW	2,94	2,74	2,64	2,58	2,96	3,05	2,95	2,84
ESEER	(1)	kW/kW	4,47	4,24	4,13	4,27	4,24	4,31	4,23	4,25
COOLING ONLY (EN14511 VALUE)										
Cooling capacity	(1)(2)	kW	17,9	21,9	24,4	28,5	36,9	43,7	50,6	56,0
EER	(1)(2)	kW/kW	2,95	2,74	2,67	2,58	2,97	3,07	2,97	2,85
ESEER	(1)(2)	kW/kW	4,39	4,16	4,09	4,20	4,20	4,27	4,19	4,21
Cooling energy class			A	A	B	B	A	A	A	A
HEATING ONLY (GROSS VALUE)										
Total heating capacity	(3)	kW	18,9	23,5	27,1	30,8	40,7	47,6	54,8	61,0
Total power input	(3)	kW	6,53	8,20	9,20	10,5	13,0	15,0	17,5	19,9
COP	(3)	kW/kW	2,89	2,87	2,95	2,93	3,13	3,17	3,13	3,07
HEATING ONLY (EN14511 VALUE)										
Total heating capacity	(3)(2)	kW	19,0	23,6	27,2	30,9	40,9	47,8	55,0	61,2
COP	(3)(2)	kW/kW	2,92	2,89	2,99	2,96	3,16	3,21	3,16	3,09
Cooling energy class			B	B	B	B	A	A	A	A
ENERGY EFFICIENCY										
SEASONAL EFFICIENCY IN COOLING (Reg. EU 2016/2281)										
Ambient refrigeration										
Prated,c	(10)	kW	-	-	-	-	-	-	-	-
SEER	(10)(11)		-	-	-	-	-	-	-	-
Performance ηs	(10)(12)	%	-	-	-	-	-	-	-	-
SEASONAL EFFICIENCY IN HEATING (Reg. EU 813/2013)										
PDesign	(4)	kW	14,3	17,6	20,6	23,6	31,4	36,7	42,4	47,2
SCOP	(4)(13)		3,73	3,75	3,90	3,88	3,86	3,87	3,84	3,84
Performance ηs	(4)(14)	%	146	147	153	152	151	152	151	150
Seasonal efficiency class	(4)		A+	A+	A++	A++	A++	A++	A++	A++
EXCHANGERS										
HEAT EXCHANGER USER SIDE IN REFRIGERATION										
Water flow	(1)	l/s	0,86	1,05	1,17	1,37	1,77	2,10	2,43	2,69
Pressure drop	(1)	kPa	16,1	17,3	15,0	16,3	18,2	15,8	16,7	16,2
HEAT EXCHANGER USER SIDE IN HEATING										
Water flow	(3)	l/s	0,91	1,13	1,31	1,49	1,96	2,30	2,65	2,94
Pressure drop	(3)	kPa	18,1	20,0	18,7	19,2	22,3	19,0	19,8	19,4
REFRIGERANT CIRCUIT										
Compressors nr.		N°	2	2	2	2	2	2	2	2
No. Circuits		N°	1	1	1	1	1	1	1	1
Refrigerant charge		kg	8,20	8,50	18,3	18,5	19,0	20,2	21,1	21,5
FANS										
Air flow		m³/s	1,81	2,08	2,22	2,36	3,61	4,44	4,86	5,14
Available static pressure		Pa	30	30	30	30	30	30	30	30
NOISE LEVEL										
Sound power level in cooling	(5)(6)(15)	dB(A)	70	72	71	72	79	76	78	79
Sound power level in heating	(5)(7)(15)	dB(A)	60	61	59	60	73	72	74	73
Sound power level in heating	(5)(8)(15)	dB(A)	70	72	71	72	79	76	78	79
SIZE AND WEIGHT										
A	(9)	mm	1500	1500	2480	2480	2480	2480	2480	2480
B	(9)	mm	900	900	1100	1100	1100	1100	1100	1100
H	(9)	mm	1910	1910	2100	2100	2100	2100	2100	2100
Operating weight	(9)	kg	450	460	840	850	910	970	970	1000

Notes:
1 Plant (side) cooling exchanger water (in/out) 12°C/7°C; Source (side) heat exchanger air (in) 35°C.
2 Values in compliance with EN14511-3:2013.
3 Plant (side) heat exchanger water (in/out) 40°C/45°C; Source (side) heat exchanger air (in) 7°C - 87% R.H.
4 Seasonal space heating energy efficiency class LOW TEMPERATURE in AVERAGE climate conditions [REGULATION (EU) N. 813/2013]
5 Total sound power of fans, as declared by the maker, at the rated speed of rotation and a useful static head of nominal on the delivery side.
6 Sound power level in cooling, outdoors.
7 Sound power level in heating, indoors.
8 Sound power level in heating, outdoors.
9 Unit in standard configuration/execution, without optional accessories.
10 Seasonal energy efficiency of the cooling environment [REGULATION (EU) N. 2016/2281]
11 Seasonal space heating energy index
12 Seasonal energy efficiency of the space cooling
13 Seasonal performance coefficient
14 Seasonal space heating energy efficiency
15 Sound power on the basis of measurements made in compliance with ISO 9614.
The units highlighted in this publication contain HFC R410A [GWP_{100} 2088] fluorinated greenhouse gases.

NX-CN /SL-K			0272	0302	0352	0402	0452	0502	0552	0602
Power supply		V/ph/Hz	400/3/50	400/3/50	400/3/50	400/3/50	400/3/50	400/3/50	400/3/50	400/3/50
PERFORMANCE										
COOLING ONLY (GROSS VALUE)										
Cooling capacity	(1)	kW	64,4	72,6	82,0	91,1	103	119	133	146
Total power input	(1)	kW	22,6	26,3	30,9	34,7	39,0	43,0	50,5	56,9
EER	(1)	kW/kW	2,85	2,76	2,65	2,63	2,64	2,76	2,63	2,56
ESEER	(1)	kW/kW	4,35	3,97	4,02	3,83	3,94	3,96	3,96	3,76
COOLING ONLY (EN14511 VALUE)										
Cooling capacity	(1)(2)	kW	64,2	72,4	81,8	90,9	103	118	132	145
EER	(1)(2)	kW/kW	2,87	2,78	2,67	2,64	2,65	2,78	2,64	2,58
ESEER	(1)(2)	kW/kW	4,34	3,97	3,99	3,82	3,91	3,93	3,93	3,74
Cooling energy class			A	A	B	B	B	A	B	B
HEATING ONLY (GROSS VALUE)										
Total heating capacity	(3)	kW	69,2	77,9	87,4	99,8	112	129	145	159
Total power input	(3)	kW	22,8	25,8	29,6	34,0	37,3	42,8	49,3	54,3
COP	(3)	kW/kW	3,04	3,02	2,95	2,94	3,00	3,02	2,93	2,93
HEATING ONLY (EN14511 VALUE)										
Total heating capacity	(3)(2)	kW	69,4	78,1	87,6	100	112	130	145	160
COP	(3)(2)	kW/kW	3,07	3,05	2,98	2,96	3,03	3,05	2,96	2,96
Cooling energy class			A	A	B	B	A	A	B	B
ENERGY EFFICIENCY										
SEASONAL EFFICIENCY IN COOLING (Reg. EU 2016/2281)										
Ambient refrigeration										
Prated,c	(10)	kW	-	-	-	-	-	-	-	-
SEER	(10)(11)		-	-	-	-	-	-	-	-
Performance ηs	(10)(12)	%	-	-	-	-	-	-	-	-
SEASONAL EFFICIENCY IN HEATING (Reg. EU 813/2013)										
PDesign	(4)	kW	53,7	60,3	67,3	76,5	85,8	99,2	111	122
SCOP	(4)(13)		3,86	3,69	3,67	3,56	3,67	3,69	3,66	3,57
Performance ηs	(4)(14)	%	151	145	144	139	144	145	143	140
Seasonal efficiency class	(4)		A++	A+	A+	-	-	-	-	-
EXCHANGERS										
HEAT EXCHANGER USER SIDE IN REFRIGERATION										
Water flow	(1)	l/s	3,08	3,47	3,92	4,36	4,92	5,68	6,34	6,97
Pressure drop	(1)	kPa	12,3	11,8	12,5	12,2	12,5	12,8	13,6	13,8
HEAT EXCHANGER USER SIDE IN HEATING										
Water flow	(3)	l/s	3,34	3,76	4,22	4,82	5,40	6,25	6,98	7,68
Pressure drop	(3)	kPa	14,4	13,9	14,5	15,0	15,1	15,5	16,5	16,7
REFRIGERANT CIRCUIT										
Compressors nr.		N°	2	2	2	2	2	2	2	2
No. Circuits		N°	1	1	1	1	1	1	1	1
Refrigerant charge		kg	34,1	29,9	31,1	32,2	37,7	38,9	39,9	49,0
FANS										
Air flow		m³/s	6,11	6,39	6,94	8,06	8,61	10,83	11,67	12,22
Available static pressure		Pa	30	30	30	30	30	30	30	30
NOISE LEVEL										
Sound power level in cooling	(5)(6)(15)	dB(A)	83	77	78	81	78	83	84	86
Sound power level in heating	(5)(7)(15)	dB(A)	75	72	71	76	77	76	76	81
Sound power level in heating	(5)(8)(15)	dB(A)	83	77	78	81	78	83	84	86
SIZE AND WEIGHT										
A	(9)	mm	2980	2980	2980	2980	3970	3970	3970	4670
B	(9)	mm	1260	1260	1260	1260	1260	1260	1260	1260
H	(9)	mm	2100	2100	2100	2100	2100	2100	2100	2100
Operating weight	(9)	kg	1090	1160	1230	1330	1630	1660	1680	1850

Notes:
1 Plant (side) cooling exchanger water (in/out) 12°C/7°C; Source (side) heat exchanger air (in) 35°C.
2 Values in compliance with EN14511-3:2013.
3 Plant (side) heat exchanger water (in/out) 40°C/45°C; Source (side) heat exchanger air (in) 7°C - 87% R.H.
4 Seasonal space heating energy efficiency class LOW TEMPERATURE in AVERAGE climate conditions [REGULATION (EU) N. 813/2013]
5 Total sound power of fans, as declared by the maker, at the rated speed of rotation and a useful static head of nominal on the delivery side.
6 Sound power level in cooling, outdoors.
7 Sound power level in heating, indoors.
8 Sound power level in heating, outdoors.
9 Unit in standard configuration/execution, without optional accessories.
10 Seasonal energy efficiency of the cooling environment [REGULATION (EU) N. 2016/2281]
11 Seasonal space heating energy index
12 Seasonal energy efficiency of the space cooling
13 Seasonal performance coefficient
14 Seasonal space heating energy efficiency
15 Sound power on the basis of measurements made in compliance with ISO 9614.
The units highlighted in this publication contain HFC R410A [GWP_{100} 2088] fluorinated greenhouse gases.

NX-CN /SL-K			0702	0524	0604	0704	0804	0904	1004
Power supply		V/ph/Hz	400/3/50	400/3/50	400/3/50	400/3/50	400/3/50	400/3/50	400/3/50
PERFORMANCE									
COOLING ONLY (GROSS VALUE)									
Cooling capacity	(1)	kW	167	122	140	161	180	212	234
Total power input	(1)	kW	64,2	45,9	54,3	61,4	70,8	80,1	90,9
EER	(1)	kW/kW	2,59	2,66	2,57	2,63	2,54	2,65	2,58
ESEER	(1)	kW/kW	3,92	4,14	4,00	4,21	3,99	4,16	4,02
COOLING ONLY (EN14511 VALUE)									
Cooling capacity	(1)(2)	kW	166	122	139	161	179	212	234
EER	(1)(2)	kW/kW	2,61	2,67	2,58	2,64	2,55	2,66	2,59
ESEER	(1)(2)	kW/kW	3,90	4,05	3,92	4,13	3,92	4,07	3,95
Cooling energy class			B	B	B	B	B	B	B
HEATING ONLY (GROSS VALUE)									
Total heating capacity	(3)	kW	182	133	154	176	194	228	251
Total power input	(3)	kW	61,2	45,3	52,6	59,2	67,0	78,6	87,0
COP	(3)	kW/kW	2,97	2,94	2,92	2,97	2,90	2,90	2,89
HEATING ONLY (EN14511 VALUE)									
Total heating capacity	(3)(2)	kW	182	134	154	176	195	228	252
COP	(3)(2)	kW/kW	3,00	2,96	2,95	3,00	2,92	2,92	2,91
Cooling energy class			B	B	B	B	B	B	B
ENERGY EFFICIENCY									
SEASONAL EFFICIENCY IN COOLING (Reg. EU 2016/2281)									
Ambient refrigeration									
Prated,c	(10)	kW	-	-	-	-	-	-	-
SEER	(10)(11)		-	-	-	-	-	-	-
Performance ηs	(10)(12)	%	-	-	-	-	-	-	-
SEASONAL EFFICIENCY IN HEATING (Reg. EU 813/2013)									
PDesign	(4)	kW	140	103	118	135	148	175	191
SCOP	(4)(13)		3,67	3,79	3,70	3,82	3,66	3,70	3,71
Performance ηs	(4)(14)	%	144	148	145	150	144	145	145
Seasonal efficiency class	(4)		-	-	-	-	-	-	-
EXCHANGERS									
HEAT EXCHANGER USER SIDE IN REFRIGERATION									
Water flow	(1)	l/s	7,96	5,83	6,68	7,72	8,60	10,15	11,19
Pressure drop	(1)	kPa	14,4	18,7	18,4	18,5	18,4	19,5	19,3
HEAT EXCHANGER USER SIDE IN HEATING									
Water flow	(3)	l/s	8,78	6,43	7,42	8,49	9,38	10,99	12,12
Pressure drop	(3)	kPa	17,5	22,7	22,8	22,4	21,9	22,9	22,7
REFRIGERANT CIRCUIT									
Compressors nr.		N°	2	4	4	4	4	4	4
No. Circuits		N°	1	2	2	2	2	2	2
Refrigerant charge		kg	56,9	43,0	44,3	51,5	53,5	68,5	71,0
FANS									
Air flow		m³/s	13,89	11,11	12,22	13,89	15,00	19,17	19,72
Available static pressure		Pa	30	30	30	30	30	30	30
NOISE LEVEL									
Sound power level in cooling	(5)(6)(15)	dB(A)	89	83	85	81	83	88	88
Sound power level in heating	(5)(7)(15)	dB(A)	80	77	80	73	73	85	85
Sound power level in heating	(5)(8)(15)	dB(A)	89	83	85	81	83	88	88
SIZE AND WEIGHT									
A	(9)	mm	5670	3970	4670	5670	5670	5670	5670
B	(9)	mm	1260	1260	1260	1260	1260	1260	1260
H	(9)	mm	2100	2100	2100	2100	2100	2100	2100
Operating weight	(9)	kg	2130	1650	1840	2330	2480	2590	2640

Notes:
1 Plant (side) cooling exchanger water (in/out) 12°C/7°C; Source (side) heat exchanger air (in) 35°C.
2 Values in compliance with EN14511-3:2013.
3 Plant (side) heat exchanger water (in/out) 40°C/45°C; Source (side) heat exchanger air (in) 7°C - 87% R.H.
4 Seasonal space heating energy efficiency class LOW TEMPERATURE in AVERAGE climate conditions [REGULATION (EU) N. 813/2013]
5 Total sound power of fans, as declared by the maker, at the rated speed of rotation and a useful static head of nominal on the delivery side.
6 Sound power level in cooling, outdoors.
7 Sound power level in heating, indoors.
8 Sound power level in heating, outdoors.
9 Unit in standard configuration/execution, without optional accessories.
10 Seasonal energy efficiency of the cooling environment [REGULATION (EU) N. 2016/2281]
11 Seasonal space heating energy index
12 Seasonal energy efficiency of the space cooling
13 Seasonal performance coefficient
14 Seasonal space heating energy efficiency
15 Sound power on the basis of measurements made in compliance with ISO 9614.
The units highlighted in this publication contain HFC R410A [GWP_{100} 2088] fluorinated greenhouse gases.
Certified data in EUROVENT

NX-CN /A			0072	0092	0102	0122	0152	0182	0202	0232
Power supply		V/ph/Hz	400/3/50	400/3/50	400/3/50	400/3/50	400/3/50	400/3/50	400/3/50	400/3/50
PERFORMANCE										
COOLING ONLY (GROSS VALUE)										
Cooling capacity	(1)	kW	18,7	23,0	26,0	30,9	38,3	45,4	52,5	58,3
Total power input	(1)	kW	6,09	8,04	8,82	10,6	12,5	14,5	17,3	19,9
EER	(1)	kW/kW	3,07	2,86	2,95	2,92	3,06	3,13	3,03	2,93
ESEER	(1)	kW/kW	4,61	4,37	4,52	4,60	4,37	4,38	4,29	4,27
COOLING ONLY (EN14511 VALUE)										
Cooling capacity	(1)(2)	kW	18,6	22,9	25,9	30,8	38,1	45,2	52,3	58,1
EER	(1)(2)	kW/kW	3,09	2,87	2,98	2,94	3,09	3,17	3,06	2,95
ESEER	(1)(2)	kW/kW	4,55	4,29	4,51	4,53	4,29	4,34	4,24	4,23
Cooling energy class			A	A	A	A	A	A	A	A
HEATING ONLY (GROSS VALUE)										
Total heating capacity	(3)	kW	19,4	24,2	28,3	32,3	41,8	48,9	56,3	62,6
Total power input	(3)	kW	6,88	8,79	9,83	11,4	13,7	15,9	18,6	21,2
COP	(3)	kW/kW	2,82	2,75	2,88	2,83	3,05	3,08	3,03	2,95
HEATING ONLY (EN14511 VALUE)										
Total heating capacity	(3)(2)	kW	19,5	24,3	28,4	32,4	42,0	49,1	56,5	62,8
COP	(3)(2)	kW/kW	2,86	2,79	2,93	2,87	3,09	3,12	3,07	2,99
Cooling energy class			B	C	B	B	A	A	A	B
ENERGY EFFICIENCY										
SEASONAL EFFICIENCY IN COOLING (Reg. EU 2016/2281)										
Ambient refrigeration										
Prated,c	(10)	kW	-	-	-	-	-	-	-	-
SEER	(10)(11)		-	-	-	-	-	-	-	-
Performance ηs	(10)(12)	%	-	-	-	-	-	-	-	-
SEASONAL EFFICIENCY IN HEATING (Reg. EU 813/2013)										
PDesign	(4)	kW	14,8	18,2	21,7	24,9	32,4	37,8	43,6	48,6
SCOP	(4)(13)		3,65	3,60	3,86	3,80	3,76	3,76	3,74	3,69
Performance ηs	(4)(14)	%	143	141	151	149	147	147	147	145
Seasonal efficiency class	(4)		A+	A+	A++	A+	A+	A+	A+	A+
EXCHANGERS										
HEAT EXCHANGER USER SIDE IN REFRIGERATION										
Water flow	(1)	l/s	0,90	1,10	1,25	1,48	1,83	2,17	2,51	2,79
Pressure drop	(1)	kPa	17,4	18,9	17,0	19,0	19,4	16,9	17,8	17,4
HEAT EXCHANGER USER SIDE IN HEATING										
Water flow	(3)	l/s	0,94	1,17	1,36	1,56	2,02	2,36	2,72	3,02
Pressure drop	(3)	kPa	19,1	21,3	20,4	21,1	23,5	20,0	20,9	20,5
REFRIGERANT CIRCUIT										
Compressors nr.		N°	2	2	2	2	2	2	2	2
No. Circuits		N°	1	1	1	1	1	1	1	1
Refrigerant charge		kg	8,20	8,50	18,3	18,5	19,0	20,2	21,1	21,5
FANS										
Air flow		m³/s	2,50	2,92	3,75	4,17	4,86	6,11	6,53	6,94
Available static pressure		Pa	30	30	30	30	30	30	30	30
NOISE LEVEL										
Sound power level in cooling	(5)(6)(15)	dB(A)	76	79	82	84	86	83	84	85
Sound power level in heating	(5)(7)(15)	dB(A)	66	68	70	66	76	79	80	79
Sound power level in heating	(5)(8)(15)	dB(A)	76	79	82	84	86	83	84	85
SIZE AND WEIGHT										
A	(9)	mm	1500	1500	2480	2480	2480	2480	2480	2480
B	(9)	mm	900	900	1100	1100	1100	1100	1100	1100
H	(9)	mm	1910	1910	2100	2100	2100	2100	2100	2100
Operating weight	(9)	kg	450	460	840	850	910	970	970	1000

Notes:
1 Plant (side) cooling exchanger water (in/out) 12°C/7°C; Source (side) heat exchanger air (in) 35°C.
2 Values in compliance with EN14511-3:2013.
3 Plant (side) heat exchanger water (in/out) 40°C/45°C; Source (side) heat exchanger air (in) 7°C - 87% R.H.
4 Seasonal space heating energy efficiency class LOW TEMPERATURE in AVERAGE climate conditions [REGULATION (EU) N. 813/2013]
5 Total sound power of fans, as declared by the maker, at the rated speed of rotation and a useful static head of nominal on the delivery side.
6 Sound power level in cooling, outdoors.
7 Sound power level in heating, indoors.
8 Sound power level in heating, outdoors.
9 Unit in standard configuration/execution, without optional accessories.
10 Seasonal energy efficiency of the cooling environment [REGULATION (EU) N. 2016/2281]
11 Seasonal space heating energy index
12 Seasonal energy efficiency of the space cooling
13 Seasonal performance coefficient
14 Seasonal space heating energy efficiency
15 Sound power on the basis of measurements made in compliance with ISO 9614.
The units highlighted in this publication contain HFC R410A [GWP_{100} 2088] fluorinated greenhouse gases.

NX-CN /A			0272	0302	0352	0402	0452	0502	0552	0602
Power supply		V/ph/Hz	400/3/50	400/3/50	400/3/50	400/3/50	400/3/50	400/3/50	400/3/50	400/3/50
PERFORMANCE										
COOLING ONLY (GROSS VALUE)										
Cooling capacity	(1)	kW	66,6	76,0	85,9	94,8	108	122	137	153
Total power input	(1)	kW	22,9	26,5	31,1	36,0	39,0	43,8	51,5	57,7
EER	(1)	kW/kW	2,91	2,87	2,76	2,63	2,78	2,79	2,65	2,65
ESEER	(1)	kW/kW	4,35	4,09	4,08	3,88	4,02	3,97	3,93	3,83
COOLING ONLY (EN14511 VALUE)										
Cooling capacity	(1)(2)	kW	66,4	75,8	85,7	94,6	108	122	136	152
EER	(1)(2)	kW/kW	2,94	2,90	2,79	2,66	2,80	2,81	2,67	2,67
ESEER	(1)(2)	kW/kW	4,33	4,08	4,07	3,87	4,01	3,96	3,90	3,83
Cooling energy class			A	A	A	A	A	A	B	B
HEATING ONLY (GROSS VALUE)										
Total heating capacity	(3)	kW	70,9	80,3	90,1	103	116	132	148	164
Total power input	(3)	kW	24,3	27,8	32,0	37,3	40,4	45,3	52,5	58,9
COP	(3)	kW/kW	2,92	2,89	2,82	2,76	2,87	2,91	2,81	2,78
HEATING ONLY (EN14511 VALUE)										
Total heating capacity	(3)(2)	kW	71,1	80,5	90,3	103	116	132	148	164
COP	(3)(2)	kW/kW	2,96	2,93	2,85	2,79	2,90	2,94	2,84	2,82
Cooling energy class			B	B	B	B	B	B	B	B
ENERGY EFFICIENCY										
SEASONAL EFFICIENCY IN COOLING (Reg. EU 2016/2281)										
Ambient refrigeration										
Prated,c	(10)	kW	-	-	-	-	-	-	-	-
SEER	(10)(11)		-	-	-	-	-	-	-	-
Performance ηs	(10)(12)	%	-	-	-	-	-	-	-	-
SEASONAL EFFICIENCY IN HEATING (Reg. EU 813/2013)										
PDesign	(4)	kW	55,1	62,4	69,7	79,4	89,2	101	114	127
SCOP	(4)(13)		3,69	3,55	3,50	3,39	3,52	3,57	3,51	3,43
Performance ηs	(4)(14)	%	144	139	137	132	138	140	137	134
Seasonal efficiency class	(4)		A+	A+	A+	-	-	-	-	-
EXCHANGERS										
HEAT EXCHANGER USER SIDE IN REFRIGERATION										
Water flow	(1)	l/s	3,19	3,64	4,11	4,53	5,18	5,83	6,53	7,30
Pressure drop	(1)	kPa	13,1	13,0	13,8	13,3	13,9	13,5	14,4	15,1
HEAT EXCHANGER USER SIDE IN HEATING										
Water flow	(3)	l/s	3,42	3,88	4,35	4,97	5,59	6,36	7,12	7,92
Pressure drop	(3)	kPa	15,2	14,7	15,4	16,0	16,2	16,1	17,1	17,8
REFRIGERANT CIRCUIT										
Compressors nr.		N°	2	2	2	2	2	2	2	2
No. Circuits		N°	1	1	1	1	1	1	1	1
Refrigerant charge		kg	34,1	29,9	31,1	32,2	37,7	38,9	39,9	49,0
FANS										
Air flow		m³/s	8,06	9,17	9,72	11,11	12,50	13,33	14,44	16,94
Available static pressure		Pa	30	30	30	30	30	30	30	30
NOISE LEVEL										
Sound power level in cooling	(5)(6)(15)	dB(A)	89	84	85	88	86	87	89	93
Sound power level in heating	(5)(7)(15)	dB(A)	76	79	78	79	79	80	81	82
Sound power level in heating	(5)(8)(15)	dB(A)	89	84	85	88	86	87	89	93
SIZE AND WEIGHT										
A	(9)	mm	2980	2980	2980	2980	3970	3970	3970	4670
B	(9)	mm	1260	1260	1260	1260	1260	1260	1260	1260
H	(9)	mm	2100	2100	2100	2100	2100	2100	2100	2100
Operating weight	(9)	kg	1090	1160	1230	1330	1630	1660	1680	1850

Notes:
1 Plant (side) cooling exchanger water (in/out) 12°C/7°C; Source (side) heat exchanger air (in) 35°C.
2 Values in compliance with EN14511-3:2013.
3 Plant (side) heat exchanger water (in/out) 40°C/45°C; Source (side) heat exchanger air (in) 7°C - 87% R.H.
4 Seasonal space heating energy efficiency class LOW TEMPERATURE in AVERAGE climate conditions [REGULATION (EU) N. 813/2013]
5 Total sound power of fans, as declared by the maker, at the rated speed of rotation and a useful static head of nominal on the delivery side.
6 Sound power level in cooling, outdoors.
7 Sound power level in heating, indoors.
8 Sound power level in heating, outdoors.
9 Unit in standard configuration/execution, without optional accessories.
10 Seasonal energy efficiency of the cooling environment [REGULATION (EU) N. 2016/2281]
11 Seasonal space heating energy index
12 Seasonal energy efficiency of the space cooling
13 Seasonal performance coefficient
14 Seasonal space heating energy efficiency
15 Sound power on the basis of measurements made in compliance with ISO 9614.
The units highlighted in this publication contain HFC R410A [GWP_{100} 2088] fluorinated greenhouse gases.

NX-CN /A			0702	0524	0604	0704	0804	0904	1004
Power supply		V/ph/Hz	400/3/50	400/3/50	400/3/50	400/3/50	400/3/50	400/3/50	400/3/50
PERFORMANCE									
COOLING ONLY (GROSS VALUE)									
Cooling capacity	(1)	kW	174	125	144	169	187	217	238
Total power input	(1)	kW	65,0	46,3	55,2	62,0	70,8	81,0	91,5
EER	(1)	kW/kW	2,67	2,70	2,61	2,73	2,64	2,68	2,60
ESEER	(1)	kW/kW	3,95	4,12	4,00	4,21	4,06	4,08	3,99
COOLING ONLY (EN14511 VALUE)									
Cooling capacity	(1)(2)	kW	173	124	144	169	187	216	237
EER	(1)(2)	kW/kW	2,69	2,71	2,63	2,75	2,66	2,69	2,61
ESEER	(1)(2)	kW/kW	3,94	4,03	3,92	4,13	3,99	4,01	3,92
Cooling energy class			B	A	B	A	B	B	B
HEATING ONLY (GROSS VALUE)									
Total heating capacity	(3)	kW	187	135	157	181	200	231	254
Total power input	(3)	kW	65,9	47,2	56,1	64,2	71,3	82,0	89,8
COP	(3)	kW/kW	2,83	2,86	2,80	2,82	2,80	2,81	2,83
HEATING ONLY (EN14511 VALUE)									
Total heating capacity	(3)(2)	kW	187	135	157	182	200	231	255
COP	(3)(2)	kW/kW	2,87	2,88	2,82	2,86	2,83	2,84	2,85
Cooling energy class			B	B	B	B	B	B	B
ENERGY EFFICIENCY									
SEASONAL EFFICIENCY IN COOLING (Reg. EU 2016/2281)									
Ambient refrigeration									
Prated,c	(10)	kW	-	-	-	-	-	-	-
SEER	(10)(11)		-	-	-	-	-	-	-
Performance ηs	(10)(12)	%	-	-	-	-	-	-	-
SEASONAL EFFICIENCY IN HEATING (Reg. EU 813/2013)									
PDesign	(4)	kW	145	106	124	142	154	180	194
SCOP	(4)(13)		3,52	3,68	3,55	3,60	3,56	3,55	3,59
Performance ηs	(4)(14)	%	138	144	139	141	139	139	141
Seasonal efficiency class	(4)		-	-	-	-	-	-	-
EXCHANGERS									
HEAT EXCHANGER USER SIDE IN REFRIGERATION									
Water flow	(1)	l/s	8,31	5,97	6,90	8,09	8,95	10,37	11,38
Pressure drop	(1)	kPa	15,7	19,6	19,7	20,4	19,9	20,4	20,0
HEAT EXCHANGER USER SIDE IN HEATING									
Water flow	(3)	l/s	9,02	6,51	7,57	8,75	9,64	11,14	12,26
Pressure drop	(3)	kPa	18,4	23,3	23,7	23,8	23,1	23,5	23,2
REFRIGERANT CIRCUIT									
Compressors nr.		N°	2	4	4	4	4	4	4
No. Circuits		N°	1	2	2	2	2	2	2
Refrigerant charge		kg	56,9	43,0	48,4	64,1	66,3	68,5	71,0
FANS									
Air flow		m³/s	18,61	13,06	15,56	19,72	19,72	21,94	21,94
Available static pressure		Pa	30	30	30	30	30	30	30
NOISE LEVEL									
Sound power level in cooling	(5)(6)(15)	dB(A)	95	87	90	88	88	91	91
Sound power level in heating	(5)(7)(15)	dB(A)	85	81	85	80	81	88	88
Sound power level in heating	(5)(8)(15)	dB(A)	95	87	90	88	88	91	91
SIZE AND WEIGHT									
A	(9)	mm	5670	3970	4670	5670	5670	5670	5670
B	(9)	mm	1260	1260	1260	1260	1260	1260	1260
H	(9)	mm	2100	2100	2100	2100	2100	2100	2100
Operating weight	(9)	kg	2130	1650	1840	2330	2480	2590	2640

Notes:
1 Plant (side) cooling exchanger water (in/out) 12°C/7°C; Source (side) heat exchanger air (in) 35°C.
2 Values in compliance with EN14511-3:2013.
3 Plant (side) heat exchanger water (in/out) 40°C/45°C; Source (side) heat exchanger air (in) 7°C - 87% R.H.
4 Seasonal space heating energy efficiency class LOW TEMPERATURE in AVERAGE climate conditions [REGULATION (EU) N. 813/2013]
5 Total sound power of fans, as declared by the maker, at the rated speed of rotation and a useful static head of nominal on the delivery side.
6 Sound power level in cooling, outdoors.
7 Sound power level in heating, indoors.
8 Sound power level in heating, outdoors.
9 Unit in standard configuration/execution, without optional accessories.
10 Seasonal energy efficiency of the cooling environment [REGULATION (EU) N. 2016/2281]
11 Seasonal space heating energy index
12 Seasonal energy efficiency of the space cooling
13 Seasonal performance coefficient
14 Seasonal space heating energy efficiency
15 Sound power on the basis of measurements made in compliance with ISO 9614.
The units highlighted in this publication contain HFC R410A [GWP_{100} 2088] fluorinated greenhouse gases.
Certified data in EUROVENT

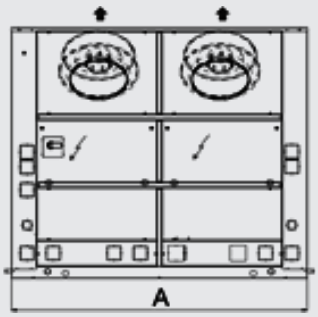

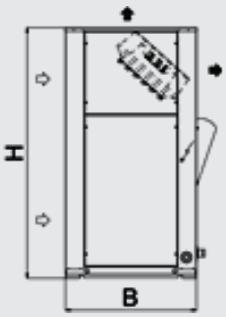

HEAT PUMPS

i-KI-MTD 0075t - 0151t

Air cooled heat pump only heating, with axial fans and inverter driven compressor, for heating water up to 60°C.
21,6-44,4 kW



The Climaveneta system is based on an packaged external units with integrated hydronic module and by an internal unit with the electronic regulation. The i-KI heat pumps provide for cooling and domestic hot water production. Particular care is taken for winter mode, that thanks to the Inverter technology is guaranteed beyond traditional units working limits, water production up to 60°C.
The i-KI heating only heat pumps feature high seasonal efficiency in both heating and cooling mode, using DC inverter technology to modulate compressor operation and deliver the exact amount of energy based on the actual needs of the building.
This excellent result has been achieved by carefully sizing all the components. Special attention has been paid to all heat
exchange surfaces and the fans. The use of newly designed condensing coils, with larger surfaces and special layout, new asymmetrical evaporators with better and more efficient refrigerant distribution, both in the liquid and gas phase, and high efficiency fans are some of the important innovations included with this product.
i-KIR units can be coupled with traditional systems or radiant panels, guaranteeing always very high energy efficiency. Intallation is strongly simplified thanks to the integrated hydronic module.

Version

B Basic

Features

WIDE RANGE
Extended capacity range.
SYSTEM EFFICIENCY
The unit is designed as a system: all components are regulated using proprietary control's logic for the highest efficiency.
HIGH EFFICIENCY AT PARTIAL LOAD
High seasonal efficiency in both heating and cooling mode, using DC inverter technology to modulate compressor operation and deliver the exact amount of energy based on the actual needs of the building. High efficiency for low energy consumption during the operating hours.
HIGH EFFICIENCY COMPONENTS
In terms of improving performance and reducing power consumption, the electronic thermostatic valve is an important component that maximises system efficiency, same for the choise the hydronic kit with inverter water pump (optional) and the modulating the fans speed.
EXTENSIVE OPERATING LIMITS
Particular care is taken for winter mode, that thanks to inverter technology is guaranteed beyond traditional units working limits, supplying hot water up to 60°C and down to -20°external air.

Accessory

- Integrated hydronic module with on/off pump or high efficiency inverter pump
- Wired room terminal with backlit display, and with temperature and umidity probe
- Extension module for system configuration
- Three-way valve for domestic hot water
- Electric heater of integration for the heating system
- Electric heater for hot water cylinder, of integration and for anti-legionellosis
- Cascade management kit
- Serial card RS485 for ModBus
- Buffer tank 35,100,200 liters
- Hot water cylinder 300,500 liters
- 300 liters thermal store for domestic hot water, for DOMH2O kit
- 300,500,1000 liters thermal store for domestic hot water with solar heat exchanger, for DOMH2O kit
- DOMH2O15 e DOMH2O24 kit for domestic hot water with external plate heat exchanger and pump
- Copper-Copper heat exchanger coils
- Copper-Aluminum heat exchanger coils with epoxy treatment
- Electric heater for the base and for condensate collecting tray to avoid freezing

Controls

NADISYSTEM
Electronic control Nadisystem provides great application flexibility. The remote keyboard kit wired and outdoor air temperature sensors allow dynamic control of delivery temperature water, optimizing comfort in the room and increasing the energy efficiency. The electronic board allows you to manage:
-Wired remote control, backlit display and with remote temperature and humidity probe
-outdoor temperature sensor for water plant side modular set point compensation
-a zone of direct heating for radiator, floor heating or fan coil
-a zone with mix valve for floor heating
-Electrical heating element for possible integration and anti-legionella cycle for cylinder
-boiler or electric heater in substitution or in addition
-the room controller can customise up to six time bands. The presence of the programmable timer allows the creation of an operating profile containing up to 6 time bands
-up to 4 heat pump in cascade (with N-CM component)
-several solutions through appropriate configurations of the controller and use of dedicated extension modules (accessorie), up to 5 zone



APPLICATION HYDRONIC TERMINAL

i-KI-MTD 0075-0151			0075t	0091t	0095t	0101t	0121t	0135t	0151t
Power supply		V/ph/Hz	400/3/50	400/3/50	400/3/50	400/3/50	400/3/50	400/3/50	400/3/50
HEATING ONLY (GROSS VALUE)									
Total heating capacity	(1)	kW	21,6	30,4	32,9	35,6	35,8	39,2	44,4
Total power input	(1)	kW	8,30	9,45	10,9	12,3	11,4	13,0	14,7
COP	(1)	kW/kW	2,60	3,22	3,02	2,89	3,14	3,02	3,02
HEATING ONLY (EN14511 VALUE)									
Total heating capacity	(1)(2)	kW	21,7	30,6	33,1	35,9	36,0	39,4	44,6
COP	(1)(2)	kW/kW	2,57	3,18	2,98	2,86	3,11	2,99	2,99
ENERGY EFFICIENCY									
SEASONAL EFFICIENCY IN HEATING (Reg. EU 813/2013)									
PDesign	(3)	kW	15,9	23,1	25,3	27,5	25,9	28,5	32,5
SCOP	(3)(9)		3,52	4,06	4,01	3,94	4,10	4,10	4,29
Performance ηs	(3)(10)	%	138	159	157	155	161	161	169
Seasonal efficiency class	(3)		A+	A++	A++	A++	A++	A++	A++
PDesign	(4)	kW	16,7	22,8	25,0	27,4	26,0	28,9	32,9
SCOP	(4)(9)		2,83	3,24	3,24	3,20	3,28	3,29	3,39
Performance ηs	(4)(10)	%	110	127	127	125	128	129	133
Seasonal efficiency class	(4)		A+	A++	A++	A++	A++	A++	A++
EXCHANGERS									
HEAT EXCHANGER USER SIDE IN HEATING									
Water flow	(1)	l/s	1,04	1,47	1,59	1,72	1,73	1,89	2,14
Pressure drop	(1)	kPa	26,1	30,6	35,9	42,2	19,4	23,2	29,7
REFRIGERANT CIRCUIT									
Compressors nr.		N°	1	1	1	1	1	1	1
No. Circuits		N°	1	1	1	1	1	1	1
Refrigerant charge		kg	5,90	9,30	9,30	9,30	10,8	10,8	10,8
NOISE LEVEL									
Sound power level in heating	(5)(6)	dB(A)	72	73	75	76	77	78	78
Sound Pressure	(7)	dB(A)	56	57	59	60	61	62	62
SIZE AND WEIGHT									
A	(8)	mm	1470	1470	1470	1470	1720	1720	1720
B	(8)	mm	570	570	570	570	670	670	670
H	(8)	mm	1200	1700	1700	1700	1700	1700	1700
Operating weight	(8)	kg	220	285	285	285	330	330	330

Notes:
1 Plant (side) heat exchanger water (in/out) 40°C/45°C; Source (side) heat exchanger air (in) 7°C - 87% R.H.
2 Values in compliance with EN14511-3:2013.
3 Seasonal space heating energy efficiency class LOW TEMPERATURE in AVERAGE climate conditions [REGULATION (EU) N. 813/2013]
4 Seasonal space heating energy efficiency class MEDIA TEMPERATURE in AVERAGE climate conditions [REGULATION (EU) N. 813/2013]
5 Sound power on the basis of measurements made in compliance with ISO 9614.
6 Sound power level in heating, outdoors.
7 Average sound pressure level at 1m distance, unit in a free field on a reflective surface; non-binding value calculated from the sound power level.
8 Unit in standard configuration/execution, without optional accessories.
9 Seasonal performance coefficient
10 Seasonal space heating energy efficiency
The units highlighted in this publication contain HFC R410A [GWP_{100} 2088] fluorinated greenhouse gases.

APPLICATION FLOOR HEATING

i-KI-MTD 0075-0151			0075t	0091t	0095t	0101t	0121t	0135t	0151t
Power supply		V/ph/Hz	400/3/50	400/3/50	400/3/50	400/3/50	400/3/50	400/3/50	400/3/50
HEATING ONLY (GROSS VALUE)									
Total heating capacity	(1)	kW	21,7	30,9	33,3	36,0	36,8	40,1	45,4
Total power input	(1)	kW	6,83	7,87	9,07	10,2	9,36	10,7	12,1
COP	(1)	kW/kW	3,18	3,93	3,67	3,53	3,93	3,75	3,75
HEATING ONLY (EN14511 VALUE)									
Total heating capacity	(1)(2)	kW	21,8	31,1	33,5	36,3	37,0	40,3	45,6
COP	(1)(2)	kW/kW	3,13	3,85	3,61	3,47	3,89	3,70	3,70
ENERGY EFFICIENCY									
SEASONAL EFFICIENCY IN HEATING (Reg. EU 813/2013)									
PDesign	(3)	kW	15,9	23,1	25,3	27,5	25,9	28,5	32,5
SCOP	(3)(9)		3,52	4,06	4,01	3,94	4,10	4,10	4,29
Performance ηs	(3)(10)	%	138	159	157	155	161	161	169
Seasonal efficiency class	(3)		A+	A++	A++	A++	A++	A++	A++
PDesign	(4)	kW	16,7	22,8	25,0	27,4	26,0	28,9	32,9
SCOP	(4)(9)		2,83	3,24	3,24	3,20	3,28	3,29	3,39
Performance ηs	(4)(10)	%	110	127	127	125	128	129	133
Seasonal efficiency class	(4)		A+	A++	A++	A++	A++	A++	A++
EXCHANGERS									
HEAT EXCHANGER USER SIDE IN HEATING									
Water flow	(1)	l/s	1,05	1,49	1,60	1,73	1,77	1,93	2,18
Pressure drop	(1)	kPa	26,2	31,6	36,5	42,7	20,3	24,1	30,9
REFRIGERANT CIRCUIT									
Compressors nr.		N°	1	1	1	1	1	1	1
No. Circuits		N°	1	1	1	1	1	1	1
Refrigerant charge		kg	5,90	9,30	9,30	9,30	10,8	10,8	10,8
NOISE LEVEL									
Sound power level in heating	(5)(6)	dB(A)	72	73	75	76	77	78	78
Sound Pressure	(7)	dB(A)	56	57	59	60	61	62	62
SIZE AND WEIGHT									
A	(8)	mm	1470	1470	1470	1470	1720	1720	1720
B	(8)	mm	570	570	570	570	670	670	670
H	(8)	mm	1200	1700	1700	1700	1700	1700	1700
Operating weight	(8)	kg	220	285	285	285	330	330	330

Notes:
1 Plant (side) heat exchanger water (in/out) 30°C/35°C; Source (side) heat exchanger air (in) 7°C - 87% R.H.
2 Values in compliance with EN14511-3:2013.
3 Seasonal space heating energy efficiency class LOW TEMPERATURE in AVERAGE climate conditions [REGULATION (EU) N. 813/2013]
4 Seasonal space heating energy efficiency class MEDIA TEMPERATURE in AVERAGE climate conditions [REGULATION (EU) N. 813/2013]
5 Sound power on the basis of measurements made in compliance with ISO 9614.
6 Sound power level in heating, outdoors.
7 Average sound pressure level at 1m distance, unit in a free field on a reflective surface; non-binding value calculated from the sound power level.
8 Unit in standard configuration/execution, without optional accessories.
9 Seasonal performance coefficient
10 Seasonal space heating energy efficiency
The units highlighted in this publication contain HFC R410A [GWP_{100} 2088] fluorinated greenhouse gases.

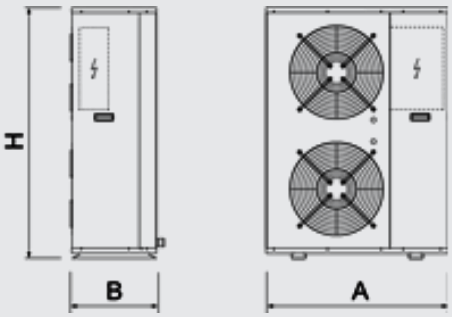

HEAT PUMPS

AW-HT 0122 - 0302

High efficiency heat pump, air source for outdoor installation, high water temperature
38,0-102 kW



Version

CA-E	Premium efficiency version: Class A enhanced
LN-CA-E	Premium efficiency version, Class A enhanced, low-noise

Configurations

-	Basic function
D	Partial condensing heat recovery function

Features

PREMIUM ´CLASS A' EFFICIENCY

The full range is available with a premium efficiency rating, over the Class A. AW-HT/CA-E and AW-HT/LN-CA-E guaranty premium levels of efficiency and quietness, making this range the best solution for both residential and light commercial markets.

MAXIMUM RELIABILITY

AW(R)-HT offer maximum operating reliability, thanks to their two main features:
- two independent circuits for all sizes;
- system to prevent formation of ice on the coil, ensuring shorter and more efficient defrost cycles.

WIDE OPERATING RANGE

Production of high temperature hot water up to 65°C for space heating and sanitary purposes. The unit can operate as standard down to -20°C outdoor temperature.

RENEWABLE ENERGY FOR COMMERCIAL INSTALLATIONS

Best solution in centralised residential systems such as apartment buildings, where the cost of renovation needs to be limited by keeping the same distribution system with radiators, while offering a source of renewable energy.

MODULAR CONFIGURATION

Modular configuration with capacity extension up to 400kW for medium- and high-capacity installations. Ability of managing different thermal loads according to the requirements of both heating and the domestic hot water systems.

AW-HT represent the best solution for systems in which there is the need to produce high temperature hot water for both space heating and sanitary purposes. With this solution the space heating can be easily provided by using radiators, so without any major changes on the already existing distribution system available on site. The EVI technology compressor with additional steam injection in the compressing cycle assures a water temperature of 65°C and operating limits as low as -20°C. Neither probes nor connections pipes to wells are needed; the installation is simple, this is a suitable solution for all applications.

Controls

W3000SE

The W3000SE controller is the new device designed especially for heat pump applications with incorporated logic for high temperature hot water production. The keypad features function controls and a complete LCD display for viewing data and activating the unit, via a multilevel menu, with settable display language. The controller provides temperature control for the heating and cooling systems in the air-conditioned rooms, as well as for domestic hot water. These different temperatures are managed automatically based on the different conditions in which the system operates, with the possibility to assign specific levels of priority to domestic hot water production, depending on the needs of the application. Diagnostics include complete alarm management, with “blackbox” functions (via PC) and alarm log (display or PC) for best analysis of unit be haviour. For systems made up of multiple units, differentiated device management means just a certain portion of the capacity installed can be dedicated to domestic water production, in this way ensuring more efficient energy distribution and, at the same time, guaranteeing simultaneous water delivery to the different distribution systems. The built-in clock can be used to create an operating profile containing up to 4 typical days and 10 time bands, essential for efficient programming of energy production, and fundamental for managing the Legionella prevention cycles. Defrosts use proprietary self-adaptive logic involving monitoring of multiple operating and climate parameters. This reduces the number and duration of defrosts, consequently increasing overall energy efficiency. Supervision is available with different options, using proprietarydevices or by integration into third party systems using ModBus, BACnet, BACnet-over-IP and Echelon LonWorks protocols. A dedicated wall-mounted keypad can be used for remote control of all the functions.



APPLICATION HYDRONIC TERMINAL

AW-HT / CA-E			0122	0152	0202	0262	0302
Power supply		V/ph/Hz	400/3+N/50	400/3+N/50	400/3+N/50	400/3+N/50	400/3+N/50
HEATING ONLY (GROSS VALUE)							
Total heating capacity	(1)	kW	38,0	51,3	68,8	84,9	102
Total power input	(1)	kW	10,7	14,4	19,4	23,6	27,7
COP	(1)	kW/kW	3,55	3,56	3,55	3,60	3,68
HEATING ONLY (EN14511 VALUE)							
Total heating capacity	(1)(2)	kW	38,1	51,4	69,0	85,2	102
COP	(1)(2)	kW/kW	3,53	3,54	3,52	3,57	3,65
ENERGY EFFICIENCY							
SEASONAL EFFICIENCY IN HEATING (Reg. EU 813/2013)							
PDesign	(3)	kW	28,4	33,8	47,5	58,5	70,6
SCOP	(3)(9)		3,12	3,07	3,14	3,20	3,30
Performance ηs	(3)(10)	%	122	120	123	125	129
Seasonal efficiency class	(3)		A	A	A+	A+	-
PDesign	(4)	kW	30,5	36,8	50,7	63,3	74,7
SCOP	(4)(9)		2,90	2,90	2,95	3,00	3,07
Performance ηs	(4)(10)	%	113	113	115	117	120
Seasonal efficiency class	(4)		A+	A+	A+	A+	-
EXCHANGERS							
HEAT EXCHANGER USER SIDE IN HEATING							
Water flow	(1)	l/s	1,83	2,48	3,32	4,10	4,92
Pressure drop	(1)	kPa	10,2	12,9	14,6	18,3	22,9
REFRIGERANT CIRCUIT							
Compressors nr.		N°	2	2	2	2	2
No. Circuits		N°	2	2	2	2	2
Refrigerant charge		kg	18,0	26,0	30,0	33,0	40,0
NOISE LEVEL							
Sound power level in heating	(5)(6)	dB(A)	84	86	87	87	87
Sound Pressure	(7)	dB(A)	67	69	70	69	69
SIZE AND WEIGHT							
A	(8)	mm	1695	2195	2745	2745	2745
B	(8)	mm	1120	1120	1120	1120	1120
H	(8)	mm	1465	1465	1465	1665	1665
Operating weight	(8)	kg	510	750	870	940	1030

Notes:
1 Plant (side) heat exchanger water (in/out) 40°C/45°C; Source (side) heat exchanger air (in) 7°C - 87% R.H.
2 Values in compliance with EN14511-3:2013.
3 Seasonal space heating energy efficiency class LOW TEMPERATURE in AVERAGE climate conditions [REGULATION (EU) N. 813/2013]
4 Seasonal space heating energy efficiency class MEDIA TEMPERATURE in AVERAGE climate conditions [REGULATION (EU) N. 813/2013]
5 Sound power on the basis of measurements made in compliance with ISO 9614.
6 Sound power level in heating, outdoors.
7 Average sound pressure level at 1m distance, unit in a free field on a reflective surface; non-binding value calculated from the sound power level.
8 Unit in standard configuration/execution, without optional accessories.
9 Seasonal performance coefficient
10 Seasonal space heating energy efficiency
The units highlighted in this publication contain HFC R407C [GWP_{100} 1774] fluorinated greenhouse gases.

APPLICATION FLOOR HEATING

AW-HT / CA-E			0122	0152	0202	0262	0302
Power supply		V/ph/Hz	400/3+N/50	400/3+N/50	400/3+N/50	400/3+N/50	400/3+N/50
HEATING ONLY (GROSS VALUE)							
Total heating capacity	(1)	kW	37,6	50,6	67,9	83,7	101
Total power input	(1)	kW	8,90	12,2	16,3	19,9	23,2
COP	(1)	kW/kW	4,22	4,15	4,17	4,21	4,34
HEATING ONLY (EN14511 VALUE)							
Total heating capacity	(1)(2)	kW	37,7	50,7	68,1	84,0	101
COP	(1)(2)	kW/kW	4,19	4,11	4,13	4,17	4,29
ENERGY EFFICIENCY							
SEASONAL EFFICIENCY IN HEATING (Reg. EU 813/2013)							
PDesign	(3)	kW	28,4	33,8	47,5	58,5	70,6
SCOP	(3)(9)		3,12	3,07	3,14	3,20	3,30
Performance ηs	(3)(10)	%	122	120	123	125	129
Seasonal efficiency class	(3)		A	A	A+	A+	-
PDesign	(4)	kW	30,5	36,8	50,7	63,3	74,7
SCOP	(4)(9)		2,90	2,90	2,95	3,00	3,07
Performance ηs	(4)(10)	%	113	113	115	117	120
Seasonal efficiency class	(4)		A+	A+	A+	A+	-
EXCHANGERS							
HEAT EXCHANGER USER SIDE IN HEATING							
Water flow	(1)	l/s	1,81	2,43	3,27	4,03	4,84
Pressure drop	(1)	kPa	9,97	12,4	14,1	17,7	22,2
REFRIGERANT CIRCUIT							
Compressors nr.		N°	2	2	2	2	2
No. Circuits		N°	2	2	2	2	2
Refrigerant charge		kg	18,0	26,0	30,0	33,0	40,0
NOISE LEVEL							
Sound power level in heating	(5)(6)	dB(A)	84	86	87	87	87
Sound Pressure	(7)	dB(A)	67	69	70	69	69
SIZE AND WEIGHT							
A	(8)	mm	1695	2195	2745	2745	2745
B	(8)	mm	1120	1120	1120	1120	1120
H	(8)	mm	1465	1465	1465	1665	1665
Operating weight	(8)	kg	510	750	870	940	1030

Notes:
1 Plant (side) heat exchanger water (in/out) 30°C/35°C; Source (side) heat exchanger air (in) 7°C - 87% R.H.
2 Values in compliance with EN14511-3:2013.
3 Seasonal space heating energy efficiency class LOW TEMPERATURE in AVERAGE climate conditions [REGULATION (EU) N. 813/2013]
4 Seasonal space heating energy efficiency class MEDIA TEMPERATURE in AVERAGE climate conditions [REGULATION (EU) N. 813/2013]
5 Sound power on the basis of measurements made in compliance with ISO 9614.
6 Sound power level in heating, outdoors.
7 Average sound pressure level at 1m distance, unit in a free field on a reflective surface; non-binding value calculated from the sound power level.
8 Unit in standard configuration/execution, without optional accessories.
9 Seasonal performance coefficient
10 Seasonal space heating energy efficiency
The units highlighted in this publication contain HFC R407C [GWP_{100} 1774] fluorinated greenhouse gases.

APPLICATION HYDRONIC TERMINAL

AW-HT / LN-CA-E			0122	0152	0202	0262	0302
Power supply		V/ph/Hz	400/3+N/50	400/3+N/50	400/3+N/50	400/3+N/50	400/3+N/50
HEATING ONLY (GROSS VALUE)							
Total heating capacity	(1)	kW	38,4	51,0	69,4	85,8	100
Total power input	(1)	kW	10,7	14,3	19,4	23,7	27,6
COP	(1)	kW/kW	3,59	3,57	3,58	3,62	3,63
HEATING ONLY (EN14511 VALUE)							
Total heating capacity	(1)(2)	kW	38,5	51,1	69,6	86,1	101
COP	(1)(2)	kW/kW	3,56	3,54	3,55	3,59	3,60
ENERGY EFFICIENCY							
SEASONAL EFFICIENCY IN HEATING (Reg. EU 813/2013)							
PDesign	(3)	kW	28,7	34,4	47,8	59,3	70,3
SCOP	(3)(9)		3,15	3,07	3,17	3,23	3,30
Performance ηs	(3)(10)	%	123	120	124	126	129
Seasonal efficiency class	(3)		A+	A	A+	A+	-
PDesign	(4)	kW	30,7	37,0	50,9	63,3	75,2
SCOP	(4)(9)		2,92	2,91	2,97	3,00	3,07
Performance ηs	(4)(10)	%	114	113	116	117	120
Seasonal efficiency class	(4)		A+	A+	A+	A+	-
EXCHANGERS							
HEAT EXCHANGER USER SIDE IN HEATING							
Water flow	(1)	l/s	1,85	2,46	3,35	4,14	4,84
Pressure drop	(1)	kPa	10,5	12,7	14,8	18,7	22,2
REFRIGERANT CIRCUIT							
Compressors nr.		N°	2	2	2	2	2
No. Circuits		N°	2	2	2	2	2
Refrigerant charge		kg	18,0	26,0	30,0	33,0	40,0
NOISE LEVEL							
Sound power level in heating	(5)(6)	dB(A)	82	84	85	85	86
Sound Pressure	(7)	dB(A)	65	67	68	67	68
SIZE AND WEIGHT							
A	(8)	mm	1695	2195	2745	2745	2745
B	(8)	mm	1120	1120	1120	1120	1120
H	(8)	mm	1465	1465	1465	1665	1665
Operating weight	(8)	kg	530	760	910	980	1030

Notes:
1 Plant (side) heat exchanger water (in/out) 40°C/45°C; Source (side) heat exchanger air (in) 7°C - 87% R.H.
2 Values in compliance with EN14511-3:2013.
3 Seasonal space heating energy efficiency class LOW TEMPERATURE in AVERAGE climate conditions [REGULATION (EU) N. 813/2013]
4 Seasonal space heating energy efficiency class MEDIA TEMPERATURE in AVERAGE climate conditions [REGULATION (EU) N. 813/2013]
5 Sound power on the basis of measurements made in compliance with ISO 9614.
6 Sound power level in heating, outdoors.
7 Average sound pressure level at 1m distance, unit in a free field on a reflective surface; non-binding value calculated from the sound power level.
8 Unit in standard configuration/execution, without optional accessories.
9 Seasonal performance coefficient
10 Seasonal space heating energy efficiency
The units highlighted in this publication contain HFC R407C [GWP_{100} 1774] fluorinated greenhouse gases.

APPLICATION FLOOR HEATING

AW-HT / LN-CA-E			0122	0152	0202	0262	0302
Power supply		V/ph/Hz	400/3+N/50	400/3+N/50	400/3+N/50	400/3+N/50	400/3+N/50
HEATING ONLY (GROSS VALUE)							
Total heating capacity	(1)	kW	38,0	50,2	68,5	84,7	99,0
Total power input	(1)	kW	8,90	12,1	16,3	20,0	23,0
COP	(1)	kW/kW	4,27	4,15	4,20	4,24	4,30
HEATING ONLY (EN14511 VALUE)							
Total heating capacity	(1)(2)	kW	38,1	50,3	68,7	85,0	99,3
COP	(1)(2)	kW/kW	4,23	4,11	4,17	4,19	4,26
ENERGY EFFICIENCY							
SEASONAL EFFICIENCY IN HEATING (Reg. EU 813/2013)							
PDesign	(3)	kW	28,7	34,4	47,8	59,3	70,3
SCOP	(3)(9)		3,15	3,07	3,17	3,23	3,30
Performance ηs	(3)(10)	%	123	120	124	126	129
Seasonal efficiency class	(3)		A+	A	A+	A+	-
PDesign	(4)	kW	30,7	37,0	50,9	63,3	75,2
SCOP	(4)(9)		2,92	2,91	2,97	3,00	3,07
Performance ηs	(4)(10)	%	114	113	116	117	120
Seasonal efficiency class	(4)		A+	A+	A+	A+	-
EXCHANGERS							
HEAT EXCHANGER USER SIDE IN HEATING							
Water flow	(1)	l/s	1,83	2,42	3,30	4,08	4,76
Pressure drop	(1)	kPa	10,2	12,2	14,4	18,1	21,5
REFRIGERANT CIRCUIT							
Compressors nr.		N°	2	2	2	2	2
No. Circuits		N°	2	2	2	2	2
Refrigerant charge		kg	18,0	26,0	30,0	33,0	40,0
NOISE LEVEL							
Sound power level in heating	(5)(6)	dB(A)	82	84	85	85	86
Sound Pressure	(7)	dB(A)	65	67	68	67	68
SIZE AND WEIGHT							
A	(8)	mm	1695	2195	2745	2745	2745
B	(8)	mm	1120	1120	1120	1120	1120
H	(8)	mm	1465	1465	1465	1665	1665
Operating weight	(8)	kg	530	760	910	980	1030

Notes:
1 Plant (side) heat exchanger water (in/out) 30°C/35°C; Source (side) heat exchanger air (in) 7°C - 87% R.H.
2 Values in compliance with EN14511-3:2013.
3 Seasonal space heating energy efficiency class LOW TEMPERATURE in AVERAGE climate conditions [REGULATION (EU) N. 813/2013]
4 Seasonal space heating energy efficiency class MEDIA TEMPERATURE in AVERAGE climate conditions [REGULATION (EU) N. 813/2013]
5 Sound power on the basis of measurements made in compliance with ISO 9614.
6 Sound power level in heating, outdoors.
7 Average sound pressure level at 1m distance, unit in a free field on a reflective surface; non-binding value calculated from the sound power level.
8 Unit in standard configuration/execution, without optional accessories.
9 Seasonal performance coefficient
10 Seasonal space heating energy efficiency
The units highlighted in this publication contain HFC R407C [GWP_{100} 1774] fluorinated greenhouse gases.

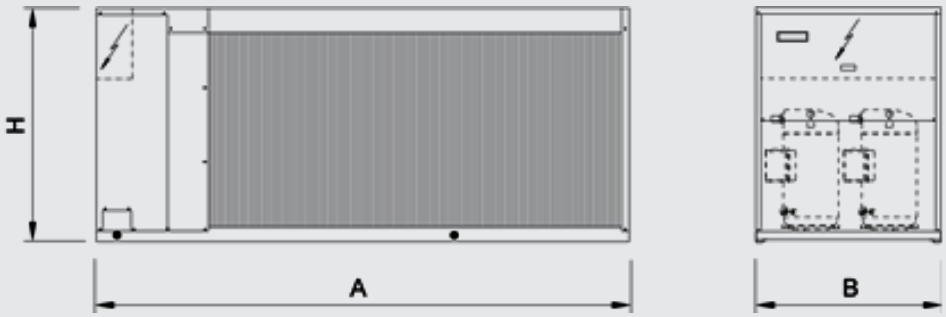

HEAT PUMPS

AW-HT 0404 - 0604

High efficiency heat pump, air source for outdoor installation, high water temperature
135-205 kW



Version

CA-E	Premium efficiency version: Class A enhanced
LN-CA-E	Premium efficiency version, Class A enhanced, low-noise

Configurations

-	Basic function
D	Partial condensing heat recovery function

Features

PREMIUM ´CLASS A' EFFICIENCY

The full range is available with a premium efficiency rating, over the Class A. AW-HT/CA-E and AW-HT/LN-CA-E guaranty premium levels of efficiency and quietness, making this range the best solution for both residential and light commercial markets.

WIDE OPERATING RANGE

Production of high temperature hot water up to 65°C for space heating and sanitary purposes. The unit can operate as standard down to -20°C outdoor temperature.

MAXIMUM RELIABILITY

AW(R)-HT offer maximum operating reliability, thanks to their two main features:
- two independent circuits for all sizes;
- system to prevent formation of ice on the coil, ensuring shorter and more efficient defrost cycles.

RENEWABLE ENERGY FOR COMMERCIAL INSTALLATIONS

Best solution in centralised residential systems such as apartment buildings, where the cost of renovation needs to be limited by keeping the same distribution system with radiators, while offering a source of renewable energy.

MODULAR CONFIGURATION

Modular configuration with capacity extension up to 1000 kW for medium- and high-capacity installations. Ability of managing different thermal loads according to the requirements of both heating and the domestic hot water systems.

AW-HT represent the best solution for systems in which there is the need to combine both high temperature water for space heating and sanitary purposes, as well as air conditioning. With this solution the space heating can be easily provided by using radiators, so without any major changes on the already existing distribution system available on site. The EVI technology compressor with additional steam injection in the compressing cycle assures a water temperature of 65°C and operating limits as low as -20°C. Neither probes nor connections pipes to wells are needed; the installation is simple, this is a suitable solution for all applications.

Controls

W3000SE

The W3000SE controller is the new device designed especially for heat pump applications with incorporated logic for high temperature hot water production. The keypad features function controls and a complete LCD display for viewing data and activating the unit, via a multilevel menu, with settable display language. The controller provides temperature control for the heating and cooling systems in the air-conditioned rooms, as well as for domestic hot water. These different temperatures are managed automatically based on the different conditions in which the system operates, with the possibility to assign specific levels of priority to domestic hot water production, depending on the needs of the application. Diagnostics include complete alarm management, with “blackbox” functions (via PC) and alarm log (display or PC) for best analysis of unit be haviour. For systems made up of multiple units, differentiated device management means just a certain portion of the capacity installed can be dedicated to domestic water production, in this way ensuring more efficient energy distribution and, at the same time, guaranteeing simultaneous water delivery to the different distribution systems. The built-in clock can be used to create an operating profile containing up to 4 typical days and 10 time bands, essential for efficient programming of energy production, and fundamental for managing the Legionella prevention cycles. Defrosts use proprietary self-adaptive logic involving monitoring of multiple operating and climate parameters. This reduces the number and duration of defrosts, consequently increasing overall energy efficiency. Supervision is available with different options, using proprietarydevices or by integration into third party systems using ModBus, BACnet, BACnet-over-IP and Echelon LonWorks protocols. A dedicated wall-mounted keypad can be used for remote control of all the functions.



APPLICATION HYDRONIC TERMINAL

AW-HT / CA-E			0404	0524	0604
Power supply		V/ph/Hz	400/3/50	400/3/50	400/3/50
HEATING ONLY (GROSS VALUE)					
Total heating capacity	(1)	kW	135	171	205
Total power input	(1)	kW	39,6	48,1	58,9
COP	(1)	kW/kW	3,41	3,56	3,48
HEATING ONLY (EN14511 VALUE)					
Total heating capacity	(1)(2)	kW	135	172	206
COP	(1)(2)	kW/kW	3,38	3,52	3,45
ENERGY EFFICIENCY					
SEASONAL EFFICIENCY IN HEATING (Reg. EU 813/2013)					
PDesign	(3)	kW	92,6	117	139
SCOP	(3)(9)		3,15	3,32	3,22
Performance ηs	(3)(10)	%	123	130	126
Seasonal efficiency class	(3)		-	-	-
PDesign	(4)	kW	98,9	126	148
SCOP	(4)(9)		2,95	3,13	3,02
Performance ηs	(4)(10)	%	115	122	118
Seasonal efficiency class	(4)		-	-	-
EXCHANGERS					
HEAT EXCHANGER USER SIDE IN HEATING					
Water flow	(1)	l/s	6,51	8,25	9,89
Pressure drop	(1)	kPa	25,4	28,6	31,3
REFRIGERANT CIRCUIT					
Compressors nr.		N°	4	4	4
No. Circuits		N°	2	2	2
Refrigerant charge		kg	66,0	108	108
NOISE LEVEL					
Sound power level in heating	(5)(6)	dB(A)	92	93	94
Sound Pressure	(7)	dB(A)	73	73	74
SIZE AND WEIGHT					
A	(8)	mm	3110	4110	4110
B	(8)	mm	2220	2220	2220
H	(8)	mm	2150	2150	2150
Operating weight	(8)	kg	1950	2400	2530

Notes:
1 Plant (side) heat exchanger water (in/out) 40°C/45°C; Source (side) heat exchanger air (in) 7°C - 87% R.H.
2 Values in compliance with EN14511-3:2013.
3 Seasonal space heating energy efficiency class LOW TEMPERATURE in AVERAGE climate conditions [REGULATION (EU) N. 813/2013]
4 Seasonal space heating energy efficiency class MEDIA TEMPERATURE in AVERAGE climate conditions [REGULATION (EU) N. 813/2013]
5 Sound power on the basis of measurements made in compliance with ISO 9614.
6 Sound power level in heating, outdoors.
7 Average sound pressure level at 1m distance, unit in a free field on a reflective surface; non-binding value calculated from the sound power level.
8 Unit in standard configuration/execution, without optional accessories.
9 Seasonal performance coefficient
10 Seasonal space heating energy efficiency
The units highlighted in this publication contain HFC R407C [GWP_{100} 1774] fluorinated greenhouse gases.

APPLICATION FLOOR HEATING

AW-HT / CA-E			0404	0524	0604
Power supply		V/ph/Hz	400/3/50	400/3/50	400/3/50
HEATING ONLY (GROSS VALUE)					
Total heating capacity	(1)	kW	133	169	202
Total power input	(1)	kW	33,5	40,7	49,7
COP	(1)	kW/kW	3,97	4,14	4,07
HEATING ONLY (EN14511 VALUE)					
Total heating capacity	(1)(2)	kW	133	169	203
COP	(1)(2)	kW/kW	3,93	4,10	4,03
ENERGY EFFICIENCY					
SEASONAL EFFICIENCY IN HEATING (Reg. EU 813/2013)					
PDesign	(3)	kW	92,6	117	139
SCOP	(3)(9)		3,15	3,32	3,22
Performance ηs	(3)(10)	%	123	130	126
Seasonal efficiency class	(3)		-	-	-
PDesign	(4)	kW	98,9	126	148
SCOP	(4)(9)		2,95	3,13	3,02
Performance ηs	(4)(10)	%	115	122	118
Seasonal efficiency class	(4)		-	-	-
EXCHANGERS					
HEAT EXCHANGER USER SIDE IN HEATING					
Water flow	(1)	l/s	6,39	8,12	9,73
Pressure drop	(1)	kPa	24,5	27,7	30,3
REFRIGERANT CIRCUIT					
Compressors nr.		N°	4	4	4
No. Circuits		N°	2	2	2
Refrigerant charge		kg	66,0	108	108
NOISE LEVEL					
Sound power level in heating	(5)(6)	dB(A)	92	93	94
Sound Pressure	(7)	dB(A)	73	73	74
SIZE AND WEIGHT					
A	(8)	mm	3110	4110	4110
B	(8)	mm	2220	2220	2220
H	(8)	mm	2150	2150	2150
Operating weight	(8)	kg	1950	2400	2530

Notes:
1 Plant (side) heat exchanger water (in/out) 30°C/35°C; Source (side) heat exchanger air (in) 7°C - 87% R.H.
2 Values in compliance with EN14511-3:2013.
3 Seasonal space heating energy efficiency class LOW TEMPERATURE in AVERAGE climate conditions [REGULATION (EU) N. 813/2013]
4 Seasonal space heating energy efficiency class MEDIA TEMPERATURE in AVERAGE climate conditions [REGULATION (EU) N. 813/2013]
5 Sound power on the basis of measurements made in compliance with ISO 9614.
6 Sound power level in heating, outdoors.
7 Average sound pressure level at 1m distance, unit in a free field on a reflective surface; non-binding value calculated from the sound power level.
8 Unit in standard configuration/execution, without optional accessories.
9 Seasonal performance coefficient
10 Seasonal space heating energy efficiency
The units highlighted in this publication contain HFC R407C [GWP_{100} 1774] fluorinated greenhouse gases.

APPLICATION HYDRONIC TERMINAL

AW-HT / LN-CA-E			0404	0524	0604
Power supply		V/ph/Hz	400/3/50	400/3/50	400/3/50
HEATING ONLY (GROSS VALUE)					
Total heating capacity	(1)	kW	135	171	205
Total power input	(1)	kW	39,6	48,1	58,9
COP	(1)	kW/kW	3,41	3,56	3,48
HEATING ONLY (EN14511 VALUE)					
Total heating capacity	(1)(2)	kW	135	172	206
COP	(1)(2)	kW/kW	3,38	3,52	3,45
ENERGY EFFICIENCY					
SEASONAL EFFICIENCY IN HEATING (Reg. EU 813/2013)					
PDesign	(3)	kW	92,6	117	139
SCOP	(3)(9)		3,15	3,32	3,22
Performance ηs	(3)(10)	%	123	130	126
Seasonal efficiency class	(3)		-	-	-
PDesign	(4)	kW	98,9	126	148
SCOP	(4)(9)		2,95	3,13	3,02
Performance ηs	(4)(10)	%	115	122	118
Seasonal efficiency class	(4)		-	-	-
EXCHANGERS					
HEAT EXCHANGER USER SIDE IN HEATING					
Water flow	(1)	l/s	6,51	8,25	9,89
Pressure drop	(1)	kPa	25,4	28,6	31,3
REFRIGERANT CIRCUIT					
Compressors nr.		N°	4	4	4
No. Circuits		N°	2	2	2
Refrigerant charge		kg	66,0	108	108
NOISE LEVEL					
Sound power level in heating	(5)(6)	dB(A)	90	90	91
Sound Pressure	(7)	dB(A)	71	70	71
SIZE AND WEIGHT					
A	(8)	mm	3110	4110	4110
B	(8)	mm	2220	2220	2220
H	(8)	mm	2150	2150	2150
Operating weight	(8)	kg	1960	2410	2540

Notes:
1 Plant (side) heat exchanger water (in/out) 40°C/45°C; Source (side) heat exchanger air (in) 7°C - 87% R.H.
2 Values in compliance with EN14511-3:2013.
3 Seasonal space heating energy efficiency class LOW TEMPERATURE in AVERAGE climate conditions [REGULATION (EU) N. 813/2013]
4 Seasonal space heating energy efficiency class MEDIA TEMPERATURE in AVERAGE climate conditions [REGULATION (EU) N. 813/2013]
5 Sound power on the basis of measurements made in compliance with ISO 9614.
6 Sound power level in heating, outdoors.
7 Average sound pressure level at 1m distance, unit in a free field on a reflective surface; non-binding value calculated from the sound power level.
8 Unit in standard configuration/execution, without optional accessories.
9 Seasonal performance coefficient
10 Seasonal space heating energy efficiency
The units highlighted in this publication contain HFC R407C [GWP_{100} 1774] fluorinated greenhouse gases.

APPLICATION FLOOR HEATING

AW-HT / LN-CA-E			0404	0524	0604
Power supply		V/ph/Hz	400/3/50	400/3/50	400/3/50
HEATING ONLY (GROSS VALUE)					
Total heating capacity	(1)	kW	133	169	202
Total power input	(1)	kW	33,5	40,7	49,7
COP	(1)	kW/kW	3,97	4,14	4,07
HEATING ONLY (EN14511 VALUE)					
Total heating capacity	(1)(2)	kW	133	169	203
COP	(1)(2)	kW/kW	3,93	4,10	4,03
ENERGY EFFICIENCY					
SEASONAL EFFICIENCY IN HEATING (Reg. EU 813/2013)					
PDesign	(3)	kW	92,6	117	139
SCOP	(3)(9)		3,15	3,32	3,22
Performance ηs	(3)(10)	%	123	130	126
Seasonal efficiency class	(3)		-	-	-
PDesign	(4)	kW	98,9	126	148
SCOP	(4)(9)		2,95	3,13	3,02
Performance ηs	(4)(10)	%	115	122	118
Seasonal efficiency class	(4)		-	-	-
EXCHANGERS					
HEAT EXCHANGER USER SIDE IN HEATING					
Water flow	(1)	l/s	6,39	8,12	9,73
Pressure drop	(1)	kPa	24,5	27,7	30,3
REFRIGERANT CIRCUIT					
Compressors nr.		N°	4	4	4
No. Circuits		N°	2	2	2
Refrigerant charge		kg	66,0	108	108
NOISE LEVEL					
Sound power level in heating	(5)(6)	dB(A)	90	90	91
Sound Pressure	(7)	dB(A)	71	70	71
SIZE AND WEIGHT					
A	(8)	mm	3110	4110	4110
B	(8)	mm	2220	2220	2220
H	(8)	mm	2150	2150	2150
Operating weight	(8)	kg	1960	2410	2540

Notes:
1 Plant (side) heat exchanger water (in/out) 30°C/35°C; Source (side) heat exchanger air (in) 7°C - 87% R.H.
2 Values in compliance with EN14511-3:2013.
3 Seasonal space heating energy efficiency class LOW TEMPERATURE in AVERAGE climate conditions [REGULATION (EU) N. 813/2013]
4 Seasonal space heating energy efficiency class MEDIA TEMPERATURE in AVERAGE climate conditions [REGULATION (EU) N. 813/2013]
5 Sound power on the basis of measurements made in compliance with ISO 9614.
6 Sound power level in heating, outdoors.
7 Average sound pressure level at 1m distance, unit in a free field on a reflective surface; non-binding value calculated from the sound power level.
8 Unit in standard configuration/execution, without optional accessories.
9 Seasonal performance coefficient
10 Seasonal space heating energy efficiency
The units highlighted in this publication contain HFC R407C [GWP_{100} 1774] fluorinated greenhouse gases.

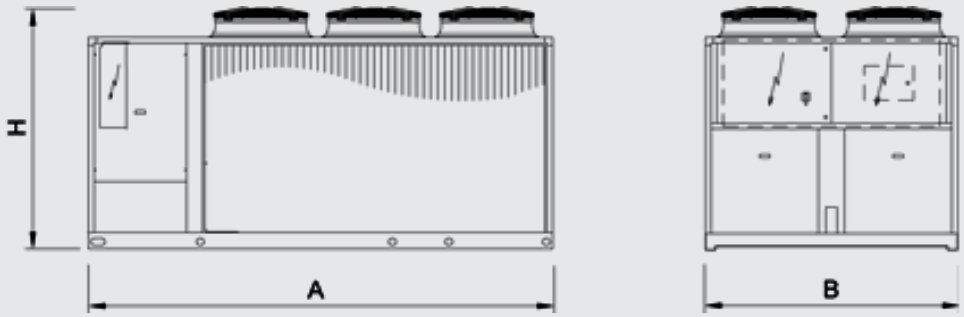

HEAT PUMPS

WWR MTD2 0011ms - 0121ts

Reversible heat pump, water source 5,20-33,4 kW



The MTD2 water-cooled heat pumps are reversible units for heating, cooling and domestic hot water by external three-way valve (accessory). Both the MTD2 heat pumps are suitable for traditional heating systems and radiant panels. The reversible heat pumps, working with water at lower temperatures, ensure a higher yield and are particularly suitable in new buildings with low energy consumption that point on using renewable energy resources. The installation is greatly simplified through the integration of the group simply by connecting the unit the water plant and the electricity so that it can be put into operation.

Version

- Basic

Features

Structure and base in hot-dip galvanised steel with epoxy powder paint finish.
High efficiency, low pressure drop AISI 316 stainless steel plate heat exchangers, fitted with heating element to provide frost protection.
Hermetic scroll type compressors, equipped with the crankcase heater and thermal protection
Case panels are insulated within low noise material for further improvement of silence
Rubber vibration damper.
Soft starter for 230V/1/50Hz units (ms)
Phase sequence control relay for three phase models
The water circuit comes complete with:

- Variable flow circulator for 0011÷0061 models and centrifugal variable flow pump for 0071 ÷ 0121 models, plant side
- Modulating valve to reduce water consumption (source side).
- Safety valve
- Expansion tank
- Manual filling assembly
- Pressure gauge
- Air vent valve
- Drain valve on both the plant and the source circuits.
- Differential pressure switch on source side and system side

Accessory

- Wired room terminal with backlit display, and with temperature and umidity probe
- Extension module for system configuration
- Three-way valve for domestic hot water
- Electric heater of integration for the heating system
- Electric heater for hot water cylinder, of integration and for anti-legionellosis
- Cascade management kit
- Serial card RS485 for ModBus
- Buffer tank 35,100,200 liters
- Hot water cylinder 300,500 liters
- 300 liters thermal store for domestic hot water, for DOMH2O kit
- 300,500,1000 liters thermal store for domestic hot water with solar heat exchanger, for DOMH2O kit
- DOMH2O15 e DOMH2O24 kit for domestic hot water with external plate heat exchanger and pump

Controls

NADISYSTEM
Electronic control Nadisystem provides great application flexibility. The remote keyboard kit wired indoor and outdoor temperature sensors allow dynamic control of delivery temperature water, optimizing comfort in the room and increasing the energy efficiency. The electronic board allows you to manage:
-wired remote control, backlit display complete with remote temperature and humidity probe
-outdoor temperature sensor for water plant side modular set point compensation
-a zone of direct heating for radiator, floor heating or fan coil
-domestic hot water production by external three-way valve (accessory)
-Electrical heating element for possible integration and anti-legionella cycle for cylinder
-boiler or electric heater in substitution or in addition
-the room controller can customise up to six time bands. The presence of the programmable timer allows the creation of an operating profile containing up to 6 time bands.
-up to 4 heat pump in cascade (with N-CM component)
-several solutions through appropriate configurations of the controller and use of dedicated extension modules (accessorie), up to 5 zone.



APPLICATION HYDRONIC TERMINAL

WWR MTD2			0011ms	0025ms	0031ms	0041ms	0025t	0031t
Power supply		V/ph/Hz	230/1/50	230/1/50	230/1/50	230/1/50	400/3/50	400/3/50
COOLING ONLY (GROSS VALUE)								
Cooling capacity	(1)	kW	5,20	7,20	8,80	11,3	7,30	8,90
Total power input	(1)	kW	1,50	2,00	2,60	3,20	1,90	2,40
EER	(1)	kW/kW	3,47	3,60	3,38	3,53	3,84	3,71
ESEER	(1)	kW/kW	3,81	4,21	3,94	3,95	4,54	4,18
COOLING ONLY (EN14511 VALUE)								
Cooling capacity	(1)(2)	kW	5,21	7,21	8,83	11,3	7,31	8,93
EER	(1)(2)	kW/kW	3,16	3,36	3,02	3,22	3,57	3,28
ESEER	(1)(2)	kW/kW	3,43	3,85	3,42	3,53	4,15	3,61
Cooling energy class			F	F	G	F	E	F
HEATING ONLY (GROSS VALUE)								
Total heating capacity	(3)	kW	7,20	9,80	12,2	15,4	9,60	12,1
Total power input	(3)	kW	1,70	2,30	3,00	3,60	2,20	2,80
COP	(3)	kW/kW	4,24	4,26	4,07	4,28	4,36	4,32
HEATING ONLY (EN14511 VALUE)								
Total heating capacity	(3)(2)	kW	7,20	9,80	12,2	15,4	9,60	12,1
COP	(3)(2)	kW/kW	3,85	3,93	3,59	3,83	4,01	3,78
Cooling energy class			D	D	E	D	C	D
ENERGY EFFICIENCY								
SEASONAL EFFICIENCY IN COOLING (Reg. EU 2016/2281)								
Ambient refrigeration								
Prated,c	(10)	kW	-	-	-	-	-	-
SEER	(10)(11)		-	-	-	-	-	-
Performance ηs	(10)(12)	%	-	-	-	-	-	-
SEASONAL EFFICIENCY IN HEATING (Reg. EU 813/2013)								
PDesign	(4)	kW	8,76	11,5	14,5	18,4	11,9	14,6
SCOP	(4)(13)		4,70	4,86	4,42	4,51	5,20	4,58
Performance ηs	(4)(14)	%	180	186	169	172	200	175
Seasonal efficiency class	(4)		A++	A++	A++	A++	A++	A++
EXCHANGERS								
HEAT EXCHANGER USER SIDE IN REFRIGERATION								
Water flow	(1)	l/s	0,25	0,34	0,42	0,54	0,35	0,43
Available unit's head	(1)	kPa	61,5	67,1	96,2	91,8	66,7	95,7
HEAT EXCHANGER USER SIDE IN HEATING								
Water flow	(3)	l/s	0,35	0,47	0,59	0,74	0,46	0,58
Available unit's head	(3)	kPa	52,2	54,6	77,3	70,8	55,6	77,9
HEAT EXCHANGER SOURCE SIDE IN REFRIGERATION								
Water flow	(1)	l/s	0,32	0,44	0,54	0,69	0,44	0,54
Pressure drop	(1)	kPa	12,3	18,3	27,5	30,8	18,3	27,1
HEAT EXCHANGER SOURCE SIDE IN HEATING								
Water flow	(3)	l/s	0,45	0,61	0,75	0,96	0,60	0,75
Pressure drop	(3)	kPa	24,2	35,5	52,5	59,5	34,6	53,5
REFRIGERANT CIRCUIT								
Compressors nr.		N°	1	1	1	1	1	1
No. Circuits		N°	1	1	1	1	1	1
Refrigerant charge		kg	1,10	1,15	1,24	1,55	1,15	1,24
NOISE LEVEL								
Sound power level in cooling	(5)(6)	dB(A)	52	53	53	58	53	53
Sound power level in heating	(5)(7)	dB(A)	52	53	53	58	53	53
Sound Pressure	(8)	dB(A)	37	38	38	43	38	38
SIZE AND WEIGHT								
A	(9)	mm	845	845	845	845	845	845
B	(9)	mm	680	680	680	680	680	680
H	(9)	mm	1105	1105	1105	1105	1105	1105
Operating weight	(9)	kg	188	190	195	210	190	195

Notes:
1 Plant (side) cooling exchanger water (in/out) 12°C/7°C; Source (side) heat exchanger water (in/out) 30°C/35°C.
2 Values in compliance with EN14511-3:2013.
3 Plant (side) heating exchanger water (in/out) 40°C/45°C; Source (side) heat exchanger water (in/out) 10°C/7°C
4 Seasonal space heating energy efficiency class LOW TEMPERATURE in AVERAGE climate conditions [REGULATION (EU) N. 813/2013]
5 Sound power on the basis of measurements made in compliance with ISO 9614.
6 Sound power level in cooling, indoors.
7 Sound power level in heating, indoors.
8 Average sound pressure level at 1m distance, unit in a free field on a reflective surface; non-binding value calculated from the sound power level.
9 Unit in standard configuration/execution, without optional accessories.
10 Seasonal energy efficiency of the cooling environment [REGULATION (EU) N. 2016/2281]
11 Seasonal space heating energy index
12 Seasonal energy efficiency of the space cooling
13 Seasonal performance coefficient
14 Seasonal space heating energy efficiency
The units highlighted in this publication contain HFC R410A [GWP_{100} 2088] fluorinated greenhouse gases.

APPLICATION HYDRONIC TERMINAL

WWR MTD2			0041t	0061t	0071t	0091t	0101t	0121t
Power supply		V/ph/Hz	400/3/50	400/3/50	400/3/50	400/3/50	400/3/50	400/3/50
COOLING ONLY (GROSS VALUE)								
Cooling capacity	(1)	kW	11,8	15,7	19,8	22,9	26,0	33,4
Total power input	(1)	kW	3,20	4,00	5,10	5,80	6,80	8,40
EER	(1)	kW/kW	3,69	3,92	3,88	3,95	3,82	3,98
ESEER	(1)	kW/kW	4,19	4,33	4,38	4,44	4,31	4,30
COOLING ONLY (EN14511 VALUE)								
Cooling capacity	(1)(2)	kW	11,8	15,7	19,9	23,0	26,2	33,6
EER	(1)(2)	kW/kW	3,35	3,64	3,50	3,62	3,46	3,68
ESEER	(1)(2)	kW/kW	3,74	3,97	3,87	4,00	3,83	3,92
Cooling energy class			F	E	E	E	E	E
HEATING ONLY (GROSS VALUE)								
Total heating capacity	(3)	kW	16,1	21,2	26,2	30,5	34,9	44,0
Total power input	(3)	kW	3,70	4,60	5,90	6,50	7,70	9,60
COP	(3)	kW/kW	4,35	4,61	4,44	4,69	4,53	4,58
HEATING ONLY (EN14511 VALUE)								
Total heating capacity	(3)(2)	kW	16,1	21,2	26,1	30,4	34,7	43,8
COP	(3)(2)	kW/kW	3,88	4,17	3,91	4,17	3,99	4,12
Cooling energy class			C	B	C	C	C	C
ENERGY EFFICIENCY								
SEASONAL EFFICIENCY IN COOLING (Reg. EU 2016/2281)								
Ambient refrigeration								
Prated,c	(10)	kW	-	-	-	-	-	-
SEER	(10)(11)		-	-	-	-	-	-
Performance ηs	(10)(12)	%	-	-	-	-	-	-
SEASONAL EFFICIENCY IN HEATING (Reg. EU 813/2013)								
PDesign	(4)	kW	19,1	25,4	31,4	36,6	41,8	52,2
SCOP	(4)(13)		4,68	4,88	4,64	4,91	4,74	4,76
Performance ηs	(4)(14)	%	179	187	177	188	182	182
Seasonal efficiency class	(4)		A++	A++	A++	A++	A++	A++
EXCHANGERS								
HEAT EXCHANGER USER SIDE IN REFRIGERATION								
Water flow	(1)	l/s	0,56	0,75	0,95	1,10	1,24	1,60
Available unit's head	(1)	kPa	89,7	85,0	159	151	184	172
HEAT EXCHANGER USER SIDE IN HEATING								
Water flow	(3)	l/s	0,78	1,02	1,26	1,47	1,68	2,12
Available unit's head	(3)	kPa	66,7	59,7	117	105	147	129
HEAT EXCHANGER SOURCE SIDE IN REFRIGERATION								
Water flow	(1)	l/s	0,71	0,94	1,18	1,36	1,56	1,99
Pressure drop	(1)	kPa	32,9	33,5	37,0	31,7	43,2	44,0
HEAT EXCHANGER SOURCE SIDE IN HEATING								
Water flow	(3)	l/s	1,01	1,34	1,65	1,94	2,20	2,79
Pressure drop	(3)	kPa	65,7	69,1	71,5	64,4	86,5	86,6
REFRIGERANT CIRCUIT								
Compressors nr.		N°	1	1	1	1	1	1
No. Circuits		N°	1	1	1	1	1	1
Refrigerant charge		kg	1,55	1,70	2,65	3,10	3,50	3,70
NOISE LEVEL								
Sound power level in cooling	(5)(6)	dB(A)	58	59	66	66	70	70
Sound power level in heating	(5)(7)	dB(A)	58	59	66	66	70	70
Sound Pressure	(8)	dB(A)	43	44	51	51	55	55
SIZE AND WEIGHT								
A	(9)	mm	845	845	845	845	845	845
B	(9)	mm	680	680	680	680	680	680
H	(9)	mm	1105	1105	1105	1105	1105	1105
Operating weight	(9)	kg	210	225	230	245	250	270

Notes:
1 Plant (side) cooling exchanger water (in/out) 12°C/7°C; Source (side) heat exchanger water (in/out) 30°C/35°C.
2 Values in compliance with EN14511-3:2013.
3 Plant (side) heating exchanger water (in/out) 40°C/45°C; Source (side) heat exchanger water (in/out) 10°C/7°C
4 Seasonal space heating energy efficiency class LOW TEMPERATURE in AVERAGE climate conditions [REGULATION (EU) N. 813/2013]
5 Sound power on the basis of measurements made in compliance with ISO 9614.
6 Sound power level in cooling, indoors.
7 Sound power level in heating, indoors.
8 Average sound pressure level at 1m distance, unit in a free field on a reflective surface; non-binding value calculated from the sound power level.
9 Unit in standard configuration/execution, without optional accessories.
10 Seasonal energy efficiency of the cooling environment [REGULATION (EU) N. 2016/2281]
11 Seasonal space heating energy index
12 Seasonal energy efficiency of the space cooling
13 Seasonal performance coefficient
14 Seasonal space heating energy efficiency
The units highlighted in this publication contain HFC R410A [GWP_{100} 2088] fluorinated greenhouse gases.
Certified data in EUROVENT

APPLICATION FLOOR HEATING

WWR MTD2			0011ms	0025ms	0031ms	0041ms	0025t	0031t
Power supply		V/ph/Hz	230/1/50	230/1/50	230/1/50	230/1/50	400/3/50	400/3/50
COOLING ONLY (GROSS VALUE)								
Cooling capacity	(1)	kW	7,10	9,80	12,0	15,1	9,50	12,0
Total power input	(1)	kW	1,60	2,00	2,50	3,30	1,80	2,50
EER	(1)	kW/kW	4,44	4,90	4,80	4,58	5,28	4,80
ESEER	(1)	kW/kW	3,81	4,21	3,94	3,95	4,54	4,18
COOLING ONLY (EN14511 VALUE)								
Cooling capacity	(1)(2)	kW	7,11	9,80	12,0	15,1	9,51	12,0
EER	(1)(2)	kW/kW	4,04	4,50	4,19	4,10	4,82	4,19
ESEER	(1)(2)	kW/kW	3,43	3,85	3,42	3,53	4,15	3,61
Cooling energy class			F	F	G	F	E	F
HEATING ONLY (GROSS VALUE)								
Total heating capacity	(3)	kW	7,70	10,2	12,8	16,2	10,4	12,8
Total power input	(3)	kW	1,40	1,80	2,30	2,90	1,70	2,20
COP	(3)	kW/kW	5,50	5,67	5,57	5,59	6,12	5,82
HEATING ONLY (EN14511 VALUE)								
Total heating capacity	(3)(2)	kW	7,70	10,2	12,8	16,2	10,4	12,8
COP	(3)(2)	kW/kW	4,84	5,04	4,66	4,79	5,38	4,83
Cooling energy class			D	D	E	D	C	D
ENERGY EFFICIENCY								
SEASONAL EFFICIENCY IN COOLING (Reg. EU 2016/2281)								
Ambient refrigeration								
Prated,c	(10)	kW	-	-	-	-	-	-
SEER	(10)(11)		-	-	-	-	-	-
Performance ηs	(10)(12)	%	-	-	-	-	-	-
SEASONAL EFFICIENCY IN HEATING (Reg. EU 813/2013)								
PDesign	(4)	kW	8,76	11,5	14,5	18,4	11,9	14,6
SCOP	(4)(13)		4,70	4,86	4,42	4,51	5,20	4,58
Performance ηs	(4)(14)	%	180	186	169	172	200	175
Seasonal efficiency class	(4)		A++	A++	A++	A++	A++	A++
EXCHANGERS								
HEAT EXCHANGER USER SIDE IN REFRIGERATION								
Water flow	(1)	l/s	0,34	0,47	0,58	0,72	0,46	0,58
Available unit's head	(1)	kPa	52,9	54,9	79,0	73,1	56,5	79,0
HEAT EXCHANGER USER SIDE IN HEATING								
Water flow	(3)	l/s	0,37	0,49	0,62	0,78	0,50	0,62
Available unit's head	(3)	kPa	49,6	52,6	73,7	66,5	51,4	73,7
HEAT EXCHANGER SOURCE SIDE IN REFRIGERATION								
Water flow	(1)	l/s	0,41	0,56	0,69	0,88	0,54	0,69
Pressure drop	(1)	kPa	20,8	30,3	44,8	49,8	27,8	44,8
HEAT EXCHANGER SOURCE SIDE IN HEATING								
Water flow	(3)	l/s	0,51	0,68	0,85	1,07	0,70	0,86
Pressure drop	(3)	kPa	31,4	44,1	67,5	74,8	47,2	68,7
REFRIGERANT CIRCUIT								
Compressors nr.		N°	1	1	1	1	1	1
No. Circuits		N°	1	1	1	1	1	1
Refrigerant charge		kg	1,10	1,15	1,24	1,55	1,15	1,24
NOISE LEVEL								
Sound power level in cooling	(5)(6)	dB(A)	52	53	53	58	53	53
Sound power level in heating	(5)(7)	dB(A)	52	53	53	58	53	53
Sound Pressure	(8)	dB(A)	37	38	38	43	38	38
SIZE AND WEIGHT								
A	(9)	mm	845	845	845	845	845	845
B	(9)	mm	680	680	680	680	680	680
H	(9)	mm	1105	1105	1105	1105	1105	1105
Operating weight	(9)	kg	188	190	195	210	190	195

Notes:
1 Plant (side) cooling exchanger water (in/out) 23°C/18°C; Source (side) heat exchanger water (in/out) 30°C/35°C.
2 Values in compliance with EN14511-3:2013.
3 Plant (side) heating exchanger water (in/out) 30°C/35°C; Source (side) heat exchanger water (in/out) 10°C/7°C
4 Seasonal space heating energy efficiency class LOW TEMPERATURE in AVERAGE climate conditions [REGULATION (EU) N. 813/2013]
5 Sound power on the basis of measurements made in compliance with ISO 9614.
6 Sound power level in cooling, indoors.
7 Sound power level in heating, indoors.
8 Average sound pressure level at 1m distance, unit in a free field on a reflective surface; non-binding value calculated from the sound power level.
9 Unit in standard configuration/execution, without optional accessories.
10 Seasonal energy efficiency of the cooling environment [REGULATION (EU) N. 2016/2281]
11 Seasonal space heating energy index
12 Seasonal energy efficiency of the space cooling
13 Seasonal performance coefficient
14 Seasonal space heating energy efficiency
The units highlighted in this publication contain HFC R410A [GWP_{100} 2088] fluorinated greenhouse gases.

APPLICATION FLOOR HEATING

WWR MTD2			0041t	0061t	0071t	0091t	0101t	0121t
Power supply		V/ph/Hz	400/3/50	400/3/50	400/3/50	400/3/50	400/3/50	400/3/50
COOLING ONLY (GROSS VALUE)								
Cooling capacity	(1)	kW	15,7	21,3	26,9	30,7	34,8	44,8
Total power input	(1)	kW	3,30	4,10	5,20	6,00	7,00	8,80
EER	(1)	kW/kW	4,76	5,20	5,17	5,12	4,97	5,09
ESEER	(1)	kW/kW	4,19	4,33	4,38	4,44	4,31	4,30
COOLING ONLY (EN14511 VALUE)								
Cooling capacity	(1)(2)	kW	15,7	21,3	27,0	30,8	35,0	45,0
EER	(1)(2)	kW/kW	4,25	4,71	4,55	4,59	4,43	4,62
ESEER	(1)(2)	kW/kW	3,74	3,97	3,87	4,00	3,83	3,92
Cooling energy class			F	E	E	E	E	E
HEATING ONLY (GROSS VALUE)								
Total heating capacity	(3)	kW	16,8	22,4	27,8	32,3	37,0	46,2
Total power input	(3)	kW	2,90	3,70	4,70	5,20	6,10	7,70
COP	(3)	kW/kW	5,79	6,05	5,91	6,21	6,07	6,00
HEATING ONLY (EN14511 VALUE)								
Total heating capacity	(3)(2)	kW	16,8	22,4	27,7	32,2	36,8	46,0
COP	(3)(2)	kW/kW	4,93	5,24	4,95	5,28	5,08	5,17
Cooling energy class			C	B	C	C	C	C
ENERGY EFFICIENCY								
SEASONAL EFFICIENCY IN COOLING (Reg. EU 2016/2281)								
Ambient refrigeration								
Prated,c	(10)	kW	-	-	-	-	-	-
SEER	(10)(11)		-	-	-	-	-	-
Performance ηs	(10)(12)	%	-	-	-	-	-	-
SEASONAL EFFICIENCY IN HEATING (Reg. EU 813/2013)								
PDesign	(4)	kW	19,1	25,4	31,4	36,6	41,8	52,2
SCOP	(4)(13)		4,68	4,88	4,64	4,91	4,74	4,76
Performance ηs	(4)(14)	%	179	187	177	188	182	182
Seasonal efficiency class	(4)		A++	A++	A++	A++	A++	A++
EXCHANGERS								
HEAT EXCHANGER USER SIDE IN REFRIGERATION								
Water flow	(1)	l/s	0,75	1,02	1,29	1,47	1,67	2,15
Available unit's head	(1)	kPa	69,7	59,9	113	105	148	127
HEAT EXCHANGER USER SIDE IN HEATING								
Water flow	(3)	l/s	0,81	1,08	1,34	1,55	1,78	2,22
Available unit's head	(3)	kPa	62,8	53,8	106	94,2	137	120
HEAT EXCHANGER SOURCE SIDE IN REFRIGERATION								
Water flow	(1)	l/s	0,90	1,21	1,53	1,75	1,99	2,55
Pressure drop	(1)	kPa	53,1	56,0	61,7	52,1	70,5	72,7
HEAT EXCHANGER SOURCE SIDE IN HEATING								
Water flow	(3)	l/s	1,12	1,51	1,86	2,18	2,49	3,10
Pressure drop	(3)	kPa	81,6	86,9	91,6	81,4	110	107
REFRIGERANT CIRCUIT								
Compressors nr.		N°	1	1	1	1	1	1
No. Circuits		N°	1	1	1	1	1	1
Refrigerant charge		kg	1,55	1,70	2,65	3,10	3,50	3,70
NOISE LEVEL								
Sound power level in cooling	(5)(6)	dB(A)	58	59	66	66	70	70
Sound power level in heating	(5)(7)	dB(A)	58	59	66	66	70	70
Sound Pressure	(8)	dB(A)	43	44	51	51	55	55
SIZE AND WEIGHT								
A	(9)	mm	845	845	845	845	845	845
B	(9)	mm	680	680	680	680	680	680
H	(9)	mm	1105	1105	1105	1105	1105	1105
Operating weight	(9)	kg	210	225	230	245	250	270

Notes:
1 Plant (side) cooling exchanger water (in/out) 23°C/18°C; Source (side) heat exchanger water (in/out) 30°C/35°C.
2 Values in compliance with EN14511-3:2013.
3 Plant (side) heating exchanger water (in/out) 30°C/35°C; Source (side) heat exchanger water (in/out) 10°C/7°C
4 Seasonal space heating energy efficiency class LOW TEMPERATURE in AVERAGE climate conditions [REGULATION (EU) N. 813/2013]
5 Sound power on the basis of measurements made in compliance with ISO 9614.
6 Sound power level in cooling, indoors.
7 Sound power level in heating, indoors.
8 Average sound pressure level at 1m distance, unit in a free field on a reflective surface; non-binding value calculated from the sound power level.
9 Unit in standard configuration/execution, without optional accessories.
10 Seasonal energy efficiency of the cooling environment [REGULATION (EU) N. 2016/2281]
11 Seasonal space heating energy index
12 Seasonal energy efficiency of the space cooling
13 Seasonal performance coefficient
14 Seasonal space heating energy efficiency
The units highlighted in this publication contain HFC R410A [GWP_{100} 2088] fluorinated greenhouse gases.
Certified data in EUROVENT

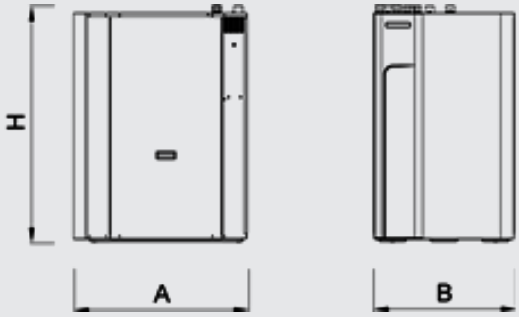
H
A
B

HEAT PUMPS

WWR DHW2 0011ms - 0121t

Reversible heat pump, total heat recovery, water source 5,10-34,8 kW



The PRANA DHW2 water-cooled heat pumps are reversible units for all year round operation in any operating mode: single cycle (air conditioning, heating, domestic hot water) as well as combined cycle in total heat recovery (domestic hot water together with cooling). Energy efficiency is highest during the summer cycle, when, thanks to the full recovery of the heat, the production of hot water is free. During the combined use, the DHW exchanger uses the temperature of the discharge gases to gets inside the accumulation sanitary water as high as 65° C. The advanced electronic regulation developed by Climaveneta ensures the highest operational flexibility, fast working condition a significant increase in the overall COP, which go hand in hand with electricity and space reduction. Advantages, combined with the possibility of completely eliminating the traditional boiler, making heat pumps PRANA DHW2 the ideal solution for energy saving applications in residential, hotel and small sector.

Features

Structure and base in hot-dip galvanised steel with epoxy powder paint finish.
Case panels are insulated within low noise material for further improvement of silence
Rubber vibration damper.
Hermetic scroll type compressors, equipped with the crankcase heater and thermal protection
High efficiency and low pressure drop stainless steel AISI 316 plate exchangers (at the domestic hot water side). It is positioned next after the compressor and it ensures the domestic hot water production. The unit has full or partial recovery system, with the constant optimization of efficiency through logic advanced adjusting controller
High efficiency and low pressure drop stainless steel AISI 316 plate exchangers (plant side) meet the supply of both hot or cold water for the facility, regardless of the domestic hot water
High efficiency and low pressure drop stainless steel (AISI 316) source side plate exchanger
Soft starter for 230V/1/50Hz units (ms)
Phase sequence control relay for three phase models
The water circuit comes complete with:

- Circulator for the 0011÷0061 models and centrifugal for the 0071÷0121 models, plant side
- Circulator for the 0011÷0091 models and centrifugal pump for the 0101÷0121 models, hot water side
- Modulating valve to reduce water consumption (source side).
- Safety valve
- Expansion tank
- Manual filling assembly
- Drain valve on both the plant and the source circuits.
- Pressure gauge
- Air vent valve
- Differential pressure switch on source side and system side

Accessory

- Wired room terminal with backlit display, and with temperature and umidity probe
- Extension module for system configuration
- Electric heater of integration for the heating system
- Electric heater for hot water cylinder, of integration and for anti-legionellosis
- Cascade management kit
- Serial card RS485 for ModBus
- Buffer tank 35,100,200 liters
- Hot water cylinder 300,500 liters
- 300 liters thermal store for domestic hot water, for DOMH2O kit
- 300,500,1000 liters thermal store for domestic hot water with solar heat exchanger, for DOMH2O kit
- DOMH2O15 e DOMH2O24 kit for domestic hot water with external plate heat exchanger and pump

Controls

NADISYSTEM
Electronic control Nadisystem provides great application flexibility. The remote keyboard kit wired and outdoor air temperature sensors allow dynamic control of delivery temperature water, optimizing comfort in the room and increasing the energy efficiency. The electronic board allows you to manage:
-Wired remote control, backlit display and with remote temperature and humidity probe
-outdoor temperature sensor for water plant side modular set point compensation
-a zone of direct heating for radiator, floor heating or fan coil
-a zone with mix valve for floor heating
-Electrical heating element for possible integration and anti-legionella cycle for cylinder
-boiler or electric heater in substitution or in addition
-the room controller can customise up to six time bands. The presence of the programmable timer allows the creation of an operating profile containing up to 6 time bands
-up to 4 heat pump in cascade (with N-CM component)
-several solutions through appropriate configurations of the controller and use of dedicated extension modules (accessorie), up to 5 zone



APPLICATION HYDRONIC TERMINAL

WWR DHW2			0011ms	0025ms	0031ms	0041ms	0025t	0031t
Power supply		V/ph/Hz	230/1/50	230/1/50	230/1/50	230/1/50	400/3/50	400/3/50
COOLING ONLY (GROSS VALUE)								
Cooling capacity	(1)	kW	5,10	7,70	8,90	11,0	7,70	8,80
Total power input	(1)	kW	1,30	2,00	2,40	2,90	2,00	2,30
EER	(1)	kW/kW	3,92	3,85	3,71	3,79	3,85	3,83
ESEER	(1)	kW/kW						
COOLING ONLY (EN14511 VALUE)								
Cooling capacity	(1)(2)	kW	5,11	7,71	8,93	11,0	7,71	8,83
EER	(1)(2)	kW/kW	3,54	3,59	3,28	3,44	3,59	3,37
ESEER	(1)(2)	kW/kW	-	-	-	-	-	-
HEATING ONLY (GROSS VALUE)								
Total heating capacity	(3)	kW	6,00	9,20	10,6	13,1	9,10	10,5
Total power input	(3)	kW	1,70	2,60	3,10	3,70	2,50	3,00
COP	(3)	kW/kW	3,53	3,54	3,42	3,54	3,64	3,50
HEATING ONLY (EN14511 VALUE)								
Total heating capacity	(2)(3)	kW	5,99	9,19	10,6	13,1	9,09	10,5
COP	(2)(3)	kW/kW	3,25	3,32	3,08	3,24	3,41	3,14
COOLING WITH TOTAL HEAT RECOVERY								
Cooling capacity	(4)	kW	4,39	6,73	7,71	9,67	6,72	7,70
Total power input	(4)	kW	1,68	2,57	3,11	3,64	2,56	3,02
Recovery heat exchanger capacity	(4)	kW	5,97	9,14	10,6	13,1	9,13	10,5
TOTAL RECOVERY ONLY								
Total heating capacity	(3)	kW	6,00	9,20	10,6	13,1	9,10	10,5
Total power input	(3)	kW	1,70	2,60	3,10	3,70	2,50	3,00
ENERGY EFFICIENCY								
SEASONAL EFFICIENCY IN COOLING (Reg. EU 2016/2281)								
Ambient refrigeration								
Prated,c	(11)	kW	-	-	-	-	-	-
SEER	(11)(12)		-	-	-	-	-	-
Performance ηs	(11)(13)	%	-	-	-	-	-	-
SEASONAL EFFICIENCY IN HEATING (Reg. EU 813/2013)								
PDesign	(5)	kW	7,19	10,9	12,5	15,5	10,8	12,4
SCOP	(5)(14)		4,02	4,12	3,72	3,71	4,23	3,81
Performance ηs	(5)(15)	%	153	157	141	140	161	144
Seasonal efficiency class	(5)		A++	A++	A+	A+	A++	A+
EXCHANGERS								
HEAT EXCHANGER USER SIDE IN REFRIGERATION								
Water flow	(1)	l/s	0,24	0,37	0,43	0,53	0,37	0,42
Available unit's head	(1)	kPa	62,4	65,9	96,5	93,9	65,9	96,9
HEAT EXCHANGER USER SIDE IN HEATING								
Water flow	(3)	l/s	0,29	0,44	0,51	0,63	0,44	0,51
Available unit's head	(3)	kPa	58,7	58,9	87,7	84,3	59,4	88,2
HEAT EXCHANGER SOURCE SIDE IN REFRIGERATION								
Water flow	(1)	l/s	0,30	0,46	0,54	0,66	0,46	0,53
Pressure drop	(1)	kPa	10,4	19,1	25,8	27,1	19,1	24,9
HEAT EXCHANGER SOURCE SIDE IN HEATING								
Water flow	(3)	l/s	0,35	0,54	0,61	0,76	0,54	0,61
Pressure drop	(3)	kPa	13,8	26,0	33,8	36,3	25,9	33,8
HEAT EXCHANGER RECOVERY USER SIDE IN REFRIGERATION								
Water flow	(4)	l/s	0,29	0,44	0,51	0,63	0,44	0,51
Pressure drop	(4)	kPa	9,36	17,5	23,6	24,8	17,4	23,2
HEAT EXCHANGER RECOVERY USER SIDE IN HEATING								
Water flow	(4)	l/s	0,28	0,46	0,51	0,65	0,43	0,50
Pressure drop	(4)	kPa	8,81	18,7	23,6	25,9	16,7	22,2
REFRIGERANT CIRCUIT								
Compressors nr.		N°	1	1	1	1	1	1
No. Circuits		N°	1	1	1	1	1	1
Refrigerant charge		kg	1,00	1,05	1,05	1,20	1,05	1,05
NOISE LEVEL								
Sound power level in cooling	(6)(7)	dB(A)	52	53	53	58	53	53
Sound power level in heating	(6)(8)	dB(A)	52	53	53	58	53	53
Sound Pressure	(9)	dB(A)	37	38	38	43	38	38
SIZE AND WEIGHT								
A	(10)	mm	845	845	845	845	845	845
B	(10)	mm	680	680	680	680	680	680
H	(10)	mm	1105	1105	1105	1105	1105	1105
Operating weight	(10)	kg	205	210	215	230	210	215

Notes:
1 Plant (side) cooling exchanger water (in/out) 12°C/7°C; Source (side) heat exchanger water (in/out) 30°C/35°C.
2 Values in compliance with EN14511-3:2013.
3 Plant (side) heating exchanger water (in/out) 40°C/45°C; Source (side) heat exchanger water (in/out) 10°C/7°C
4 Plant (side) cooling exchanger water (in/out) 12°C/7°C; Plant (auxiliary side) heat exchanger recovery water (in/out) 45°C/50°C.
5 Seasonal space heating energy efficiency class LOW TEMPERATURE in AVERAGE climate conditions [REGULATION (EU) N. 813/2013]
6 Sound power on the basis of measurements made in compliance with ISO 9614.
7 Sound power level in cooling, indoors.
8 Sound power level in heating, indoors.
9 Average sound pressure level at 1m distance, unit in a free field on a reflective surface; non-binding value calculated from the sound power level.
10 Unit in standard configuration/execution, without optional accessories.
11 Seasonal energy efficiency of the cooling environment [REGULATION (EU) N. 2016/2281]
12 Seasonal space heating energy index
13 Seasonal energy efficiency of the space cooling
14 Seasonal performance coefficient
15 Seasonal space heating energy efficiency
The units highlighted in this publication contain HFC R407C [GWP_{100} 1774] fluorinated greenhouse gases.

APPLICATION HYDRONIC TERMINAL

WWR DHW2			0041t	0061t	0071t	0091t	0101t	0121t
Power supply		V/ph/Hz	400/3/50	400/3/50	400/3/50	400/3/50	400/3/50	400/3/50
COOLING ONLY (GROSS VALUE)								
Cooling capacity	(1)	kW	10,9	16,1	21,7	24,6	28,0	34,8
Total power input	(1)	kW	2,80	4,00	5,40	5,90	7,00	8,90
EER	(1)	kW/kW	3,89	4,03	4,02	4,17	4,00	3,91
ESEER	(1)	kW/kW						
COOLING ONLY (EN14511 VALUE)								
Cooling capacity	(1)(2)	kW	10,9	16,1	21,8	24,7	28,2	35,1
EER	(1)(2)	kW/kW	3,52	3,76	3,63	3,82	3,63	3,63
ESEER	(1)(2)	kW/kW	-	-	-	-	-	-
HEATING ONLY (GROSS VALUE)								
Total heating capacity	(3)	kW	13,0	19,0	25,5	28,7	32,9	40,7
Total power input	(3)	kW	3,50	5,00	6,80	7,40	8,80	11,2
COP	(3)	kW/kW	3,71	3,80	3,75	3,88	3,74	3,63
HEATING ONLY (EN14511 VALUE)								
Total heating capacity	(2)(3)	kW	13,0	19,0	25,4	28,6	32,7	40,5
COP	(2)(3)	kW/kW	3,38	3,55	3,38	3,54	3,39	3,36
COOLING WITH TOTAL HEAT RECOVERY								
Cooling capacity	(4)	kW	9,65	14,2	19,1	21,7	24,6	30,2
Total power input	(4)	kW	3,57	5,00	6,85	7,44	8,83	11,2
Recovery heat exchanger capacity	(4)	kW	13,0	18,9	25,6	28,7	32,9	40,7
TOTAL RECOVERY ONLY								
Total heating capacity	(3)	kW	13,0	19,0	25,5	28,7	32,9	40,7
Total power input	(3)	kW	3,50	5,00	6,80	7,40	8,80	11,2
ENERGY EFFICIENCY								
SEASONAL EFFICIENCY IN COOLING (Reg. EU 2016/2281)								
Ambient refrigeration								
Prated,c	(11)	kW	-	-	-	-	-	-
SEER	(11)(12)		-	-	-	-	-	-
Performance ηs	(11)(13)	%	-	-	-	-	-	-
SEASONAL EFFICIENCY IN HEATING (Reg. EU 813/2013)								
PDesign	(5)	kW	15,2	22,6	30,3	34,0	38,9	48,7
SCOP	(5)(14)		4,05	4,31	4,05	4,19	4,04	4,07
Performance ηs	(5)(15)	%	154	164	154	159	154	155
Seasonal efficiency class	(5)		A++	A++	A++	A++	A++	A++
EXCHANGERS								
HEAT EXCHANGER USER SIDE IN REFRIGERATION								
Water flow	(1)	l/s	0,52	0,77	1,04	1,18	1,34	1,66
Available unit's head	(1)	kPa	94,3	87,6	149	143	180	169
HEAT EXCHANGER USER SIDE IN HEATING								
Water flow	(3)	l/s	0,63	0,92	1,23	1,38	1,59	1,97
Available unit's head	(3)	kPa	84,8	76,2	124	119	161	145
HEAT EXCHANGER SOURCE SIDE IN REFRIGERATION								
Water flow	(1)	l/s	0,65	0,96	1,29	1,45	1,66	2,08
Pressure drop	(1)	kPa	26,3	28,6	41,3	33,9	44,1	45,6
HEAT EXCHANGER SOURCE SIDE IN HEATING								
Water flow	(3)	l/s	0,77	1,14	1,52	1,73	1,96	2,41
Pressure drop	(3)	kPa	37,1	40,6	57,6	48,2	61,3	61,2
HEAT EXCHANGER RECOVERY USER SIDE IN REFRIGERATION								
Water flow	(4)	l/s	0,63	0,91	1,24	1,39	1,59	1,96
Pressure drop	(4)	kPa	24,4	26,1	37,9	31,0	40,2	40,7
HEAT EXCHANGER RECOVERY USER SIDE IN HEATING								
Water flow	(4)	l/s	0,62	0,90	1,20	1,35	1,55	1,91
Pressure drop	(4)	kPa	23,6	25,2	35,9	29,5	38,2	38,4
REFRIGERANT CIRCUIT								
Compressors nr.		N°	1	1	1	1	1	1
No. Circuits		N°	1	1	1	1	1	1
Refrigerant charge		kg	1,20	1,80	2,00	2,20	2,60	3,00
NOISE LEVEL								
Sound power level in cooling	(6)(7)	dB(A)	58	59	66	66	70	70
Sound power level in heating	(6)(8)	dB(A)	58	59	66	66	70	70
Sound Pressure	(9)	dB(A)	43	44	51	51	55	55
SIZE AND WEIGHT								
A	(10)	mm	845	845	845	845	845	845
B	(10)	mm	680	680	680	680	680	680
H	(10)	mm	1105	1105	1105	1105	1105	1105
Operating weight	(10)	kg	230	245	270	280	290	315

Notes:
1 Plant (side) cooling exchanger water (in/out) 12°C/7°C; Source (side) heat exchanger water (in/out) 30°C/35°C.
2 Values in compliance with EN14511-3:2013.
3 Plant (side) heating exchanger water (in/out) 40°C/45°C; Source (side) heat exchanger water (in/out) 10°C/7°C
4 Plant (side) cooling exchanger water (in/out) 12°C/7°C; Plant (auxiliary side) heat exchanger recovery water (in/out) 45°C/50°C.
5 Seasonal space heating energy efficiency class LOW TEMPERATURE in AVERAGE climate conditions [REGULATION (EU) N. 813/2013]
6 Sound power on the basis of measurements made in compliance with ISO 9614.
7 Sound power level in cooling, indoors.
8 Sound power level in heating, indoors.
9 Average sound pressure level at 1m distance, unit in a free field on a reflective surface; non-binding value calculated from the sound power level.
10 Unit in standard configuration/execution, without optional accessories.
11 Seasonal energy efficiency of the cooling environment [REGULATION (EU) N. 2016/2281]
12 Seasonal space heating energy index
13 Seasonal energy efficiency of the space cooling
14 Seasonal performance coefficient
15 Seasonal space heating energy efficiency
The units highlighted in this publication contain HFC R407C [GWP_{100} 1774] fluorinated greenhouse gases.

APPLICATION FLOOR HEATING

WWR DHW2			0011ms	0025ms	0031ms	0041ms	0025t	0031t
Power supply		V/ph/Hz	230/1/50	230/1/50	230/1/50	230/1/50	400/3/50	400/3/50
COOLING ONLY (GROSS VALUE)								
Cooling capacity	(1)	kW	7,26	11,0	12,6	15,4	11,0	12,5
Total power input	(1)	kW	1,29	1,96	2,37	2,89	1,96	2,27
EER	(1)	kW/kW	5,63	5,61	5,32	5,33	5,61	5,51
ESEER	(1)	kW/kW						
COOLING ONLY (EN14511 VALUE)								
Cooling capacity	(1)(2)	kW	7,27	11,0	12,6	15,4	11,0	12,5
EER	(1)(2)	kW/kW	5,03	5,11	4,61	4,72	5,11	4,75
ESEER	(1)(2)	kW/kW	-	-	-	-	-	-
HEATING ONLY (GROSS VALUE)								
Total heating capacity	(3)	kW	6,35	9,64	11,1	13,7	9,50	11,0
Total power input	(3)	kW	1,33	2,03	2,43	2,91	1,94	2,35
COP	(3)	kW/kW	4,77	4,75	4,57	4,71	4,90	4,68
HEATING ONLY (EN14511 VALUE)								
Total heating capacity	(2)(3)	kW	6,34	9,63	11,1	13,7	9,49	11,0
COP	(2)(3)	kW/kW	4,26	4,34	3,96	4,16	4,46	4,04
COOLING WITH TOTAL HEAT RECOVERY								
Cooling capacity	(4)	kW	6,42	9,77	11,0	13,8	9,70	11,1
Total power input	(4)	kW	1,68	2,51	3,05	3,66	2,51	2,97
Recovery heat exchanger capacity	(4)	kW	8,00	12,1	13,9	17,2	12,1	13,9
TOTAL RECOVERY ONLY								
Total heating capacity	(3)	kW	6,35	9,64	11,1	13,7	9,50	11,0
Total power input	(3)	kW	1,33	2,03	2,43	2,91	1,94	2,35
ENERGY EFFICIENCY								
SEASONAL EFFICIENCY IN COOLING (Reg. EU 2016/2281)								
Ambient refrigeration								
Prated,c	(11)	kW	-	-	-	-	-	-
SEER	(11)(12)		-	-	-	-	-	-
Performance ηs	(11)(13)	%	-	-	-	-	-	-
SEASONAL EFFICIENCY IN HEATING (Reg. EU 813/2013)								
PDesign	(5)	kW	7,19	10,9	12,5	15,5	10,8	12,4
SCOP	(5)(14)		4,02	4,12	3,72	3,71	4,23	3,81
Performance ηs	(5)(15)	%	153	157	141	140	161	144
Seasonal efficiency class	(5)		A++	A++	A+	A+	A++	A+
EXCHANGERS								
HEAT EXCHANGER USER SIDE IN REFRIGERATION								
Water flow	(1)	l/s	0,35	0,53	0,60	0,74	0,53	0,60
Available unit's head	(1)	kPa	53,2	50,2	77,1	73,1	50,1	77,6
HEAT EXCHANGER USER SIDE IN HEATING								
Water flow	(3)	l/s	0,31	0,46	0,53	0,66	0,46	0,53
Available unit's head	(3)	kPa	57,3	56,9	85,4	81,7	57,6	86,1
HEAT EXCHANGER SOURCE SIDE IN REFRIGERATION								
Water flow	(1)	l/s	0,41	0,62	0,71	0,87	0,62	0,70
Pressure drop	(1)	kPa	18,7	34,0	45,4	47,0	34,1	44,3
HEAT EXCHANGER SOURCE SIDE IN HEATING								
Water flow	(3)	l/s	0,41	0,62	0,70	0,87	0,61	0,70
Pressure drop	(3)	kPa	18,6	34,0	44,1	47,1	33,5	43,7
HEAT EXCHANGER RECOVERY USER SIDE IN REFRIGERATION								
Water flow	(4)	l/s	0,39	0,59	0,67	0,83	0,58	0,67
Pressure drop	(4)	kPa	16,8	30,8	40,5	42,9	30,4	40,1
HEAT EXCHANGER RECOVERY USER SIDE IN HEATING								
Water flow	(4)	l/s	0,28	0,46	0,51	0,65	0,43	0,50
Pressure drop	(4)	kPa	8,81	18,7	23,6	25,9	16,7	22,2
REFRIGERANT CIRCUIT								
Compressors nr.		N°	1	1	1	1	1	1
No. Circuits		N°	1	1	1	1	1	1
Refrigerant charge		kg	1,00	1,05	1,05	1,20	1,05	1,05
NOISE LEVEL								
Sound power level in cooling	(6)(7)	dB(A)	52	53	53	58	53	53
Sound power level in heating	(6)(8)	dB(A)	52	53	53	58	53	53
Sound Pressure	(9)	dB(A)	37	38	38	43	38	38
SIZE AND WEIGHT								
A	(10)	mm	845	845	845	845	845	845
B	(10)	mm	680	680	680	680	680	680
H	(10)	mm	1105	1105	1105	1105	1105	1105
Operating weight	(10)	kg	205	210	215	230	210	215

Notes:
1 Plant (side) cooling exchanger water (in/out) 23°C/18°C; Source (side) heat exchanger water (in/out) 30°C/35°C.
2 Values in compliance with EN14511-3:2013.
3 Plant (side) heating exchanger water (in/out) 30°C/35°C; Source (side) heat exchanger water (in/out) 10°C/7°C
4 Plant (side) cooling exchanger water (in/out) 23°C/18°C; Plant (auxiliary side) heat exchanger recovery water (in/out) 45°C/50°C.
5 Seasonal space heating energy efficiency class LOW TEMPERATURE in AVERAGE climate conditions [REGULATION (EU) N. 813/2013]
6 Sound power on the basis of measurements made in compliance with ISO 9614.
7 Sound power level in cooling, indoors.
8 Sound power level in heating, indoors.
9 Average sound pressure level at 1m distance, unit in a free field on a reflective surface; non-binding value calculated from the sound power level.
10 Unit in standard configuration/execution, without optional accessories.
11 Seasonal energy efficiency of the cooling environment [REGULATION (EU) N. 2016/2281]
12 Seasonal space heating energy index
13 Seasonal energy efficiency of the space cooling
14 Seasonal performance coefficient
15 Seasonal space heating energy efficiency
The units highlighted in this publication contain HFC R407C [GWP_{100} 1774] fluorinated greenhouse gases.

APPLICATION FLOOR HEATING

WWR DHW2			0041t	0061t	0071t	0091t	0101t	0121t
Power supply		V/ph/Hz	400/3/50	400/3/50	400/3/50	400/3/50	400/3/50	400/3/50
COOLING ONLY (GROSS VALUE)								
Cooling capacity	(1)	kW	15,4	22,5	30,2	34,4	39,0	49,8
Total power input	(1)	kW	2,82	4,10	5,47	6,11	7,28	9,24
EER	(1)	kW/kW	5,46	5,49	5,52	5,63	5,36	5,39
ESEER	(1)	kW/kW						
COOLING ONLY (EN14511 VALUE)								
Cooling capacity	(1)(2)	kW	15,4	22,5	30,3	34,5	39,2	50,0
EER	(1)(2)	kW/kW	4,83	5,00	4,82	4,99	4,76	4,85
ESEER	(1)(2)	kW/kW	-	-	-	-	-	-
HEATING ONLY (GROSS VALUE)								
Total heating capacity	(3)	kW	13,5	19,9	26,8	30,1	34,5	43,1
Total power input	(3)	kW	2,76	3,97	5,37	5,93	6,99	8,93
COP	(3)	kW/kW	4,89	5,01	4,99	5,08	4,94	4,83
HEATING ONLY (EN14511 VALUE)								
Total heating capacity	(2)(3)	kW	13,5	19,9	26,7	30,0	34,3	42,9
COP	(2)(3)	kW/kW	4,30	4,54	4,33	4,48	4,32	4,32
COOLING WITH TOTAL HEAT RECOVERY								
Cooling capacity	(4)	kW	13,8	20,0	27,2	30,8	34,9	44,1
Total power input	(4)	kW	3,62	5,10	6,88	7,60	9,12	11,5
Recovery heat exchanger capacity	(4)	kW	17,2	24,8	33,7	38,0	43,5	54,9
TOTAL RECOVERY ONLY								
Total heating capacity	(3)	kW	13,5	19,9	26,8	30,1	34,5	43,1
Total power input	(3)	kW	2,76	3,97	5,37	5,93	6,99	8,93
ENERGY EFFICIENCY								
SEASONAL EFFICIENCY IN COOLING (Reg. EU 2016/2281)								
Ambient refrigeration								
Prated,c	(11)	kW	-	-	-	-	-	-
SEER	(11)(12)		-	-	-	-	-	-
Performance ηs	(11)(13)	%	-	-	-	-	-	-
SEASONAL EFFICIENCY IN HEATING (Reg. EU 813/2013)								
PDesign	(5)	kW	15,2	22,6	30,3	34,0	38,9	48,7
SCOP	(5)(14)		4,05	4,31	4,05	4,19	4,04	4,07
Performance ηs	(5)(15)	%	154	164	154	159	154	155
Seasonal efficiency class	(5)		A++	A++	A++	A++	A++	A++
EXCHANGERS								
HEAT EXCHANGER USER SIDE IN REFRIGERATION								
Water flow	(1)	l/s	0,74	1,08	1,45	1,65	1,87	2,39
Available unit's head	(1)	kPa	72,9	61,7	92,4	83,3	134	107
HEAT EXCHANGER USER SIDE IN HEATING								
Water flow	(3)	l/s	0,65	0,96	1,29	1,45	1,66	2,08
Available unit's head	(3)	kPa	82,5	72,9	116	110	154	136
HEAT EXCHANGER SOURCE SIDE IN REFRIGERATION								
Water flow	(1)	l/s	0,87	1,27	1,70	1,93	2,20	2,81
Pressure drop	(1)	kPa	46,9	50,3	71,7	60,1	77,4	83,6
HEAT EXCHANGER SOURCE SIDE IN HEATING								
Water flow	(3)	l/s	0,87	1,29	1,73	1,95	2,23	2,77
Pressure drop	(3)	kPa	46,9	51,8	74,5	61,5	78,9	81,0
HEAT EXCHANGER RECOVERY USER SIDE IN REFRIGERATION								
Water flow	(4)	l/s	0,83	1,20	1,63	1,83	2,10	2,65
Pressure drop	(4)	kPa	42,9	44,8	65,8	54,1	70,3	74,2
HEAT EXCHANGER RECOVERY USER SIDE IN HEATING								
Water flow	(4)	l/s	0,62	0,90	1,20	1,35	1,55	1,91
Pressure drop	(4)	kPa	23,6	25,2	35,9	29,5	38,2	38,4
REFRIGERANT CIRCUIT								
Compressors nr.		N°	1	1	1	1	1	1
No. Circuits		N°	1	1	1	1	1	1
Refrigerant charge		kg	1,20	1,80	2,00	2,20	2,60	3,00
NOISE LEVEL								
Sound power level in cooling	(6)(7)	dB(A)	58	59	66	66	70	70
Sound power level in heating	(6)(8)	dB(A)	58	59	66	66	70	70
Sound Pressure	(9)	dB(A)	43	44	51	51	55	55
SIZE AND WEIGHT								
A	(10)	mm	845	845	845	845	845	845
B	(10)	mm	680	680	680	680	680	680
H	(10)	mm	1105	1105	1105	1105	1105	1105
Operating weight	(10)	kg	230	245	270	280	290	315

Notes:
1 Plant (side) cooling exchanger water (in/out) 23°C/18°C; Source (side) heat exchanger water (in/out) 30°C/35°C.
2 Values in compliance with EN14511-3:2013.
3 Plant (side) heating exchanger water (in/out) 30°C/35°C; Source (side) heat exchanger water (in/out) 10°C/7°C
4 Plant (side) cooling exchanger water (in/out) 23°C/18°C; Plant (auxiliary side) heat exchanger recovery water (in/out) 45°C/50°C.
5 Seasonal space heating energy efficiency class LOW TEMPERATURE in AVERAGE climate conditions [REGULATION (EU) N. 813/2013]
6 Sound power on the basis of measurements made in compliance with ISO 9614.
7 Sound power level in cooling, indoors.
8 Sound power level in heating, indoors.
9 Average sound pressure level at 1m distance, unit in a free field on a reflective surface; non-binding value calculated from the sound power level.
10 Unit in standard configuration/execution, without optional accessories.
11 Seasonal energy efficiency of the cooling environment [REGULATION (EU) N. 2016/2281]
12 Seasonal space heating energy index
13 Seasonal energy efficiency of the space cooling
14 Seasonal performance coefficient
15 Seasonal space heating energy efficiency
The units highlighted in this publication contain HFC R407C [GWP_{100} 1774] fluorinated greenhouse gases.

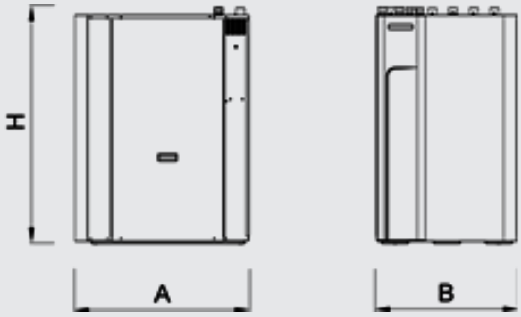
H
A
B

HEAT PUMPS

NX-WN 0122 - 1204

Reversible heat pump, water source 37,5-396 kW



Water to water indoor unit for the production of chilled/hot water with hermetic rotary Scroll compressors, braze-welded plate-type exchanger and electronic expansion valve. Basement and frame in hot-galvanised shaped sheet steel with a suitable thickness. All parts polyester-powder painted to assure total weather resistance, RAL 7035.
The range includes the single-circuit two-compressor versions and the dual circuit four-compressor versions.

Version

- Basic

Configurations

- Basic function

Features

HIGH EFFICIENCY

Very high efficiency at full and partial load, at the highest market levels, thanks to the adopted technological solutions. These units ensure low operating costs and therefore a quick payback time.

ErP READY

The highest level of efficiency at part load can meet and exceed the minimum seasonal efficiency for heating, SCOP (only for reversible units) and for cooling, SEER, according with the eco-sustainable design requirements for all products using energy. The units already comply with the minimum seasonal energy efficiency requirements that will start from 2021.

VARIBLE PRIMARY FLOW (OPTION)

Energy saving due to variable pump speed management based on load demand and the variable flow assures the functioning of the units also with critical working conditions. VPF (Variable Primary Flow) available for sizes 0604-1204.

EXTREMELY SILENT OPERATION

Extremely silent operation together with high efficiency, tank to dedicated acoustic devices and a precise design for the choice of the components.

INTEGRATED HYDRONIC MODULE

The built-in hydronic module already contains the main water circuit components; it is available as option with single or twin in-line pump, for achieving low head, fixed or variable speed, available for user side and source side (up to 4 pumps).

INTEGRATED CONDENSATION´S CONTROL

The electronics of the units manages the most suitable condensing control for each type of application: pressure-controlled valve, two or three-way modulating valv, 0-10V signal for variable speed driven pumps.

TOTAL VERSATILITY

Climaveneta has designed the NX-W units with a range of integral accessories in mind for operation with total water loss (well, water bed, etc.), dry cooler or cooling tower and suitable for geothermal application so as to satisfy all service system and installation requirements.

ELECTRONIC EXPANSION VALVE SUPPLIED STANDARD

The use of the electronic expansion valve generates considerable benefits, especially in cases of variable demand and at different working conditions. It guaranteed energy saving due to efficiency optimization in various different working conditions. The electronic thermostatic valve allows you to obtain speed in reaching machine stability and an extension of the operating limits.

Accessory

- Touch Screen visual display
- Set-up for remote connectivity with ModBus/Echelon protocol cards
- Outside air temperature probe for plant water set point compensation.
- Integral acoustical enclosure (type base)
- Thicker soundproofing cladding
- User side and source side hydronic kit available in different configurations
- VPF (Variable Primary Flow) system
- Condensing control device: two or three-way modulating pressure-controlled valve and inverter on pumps

Controls

Electronic control W3000TE

The brand new W3000TE controller offers advanced functions and algorithms.
The keypad W3000 Compact, as standard equipment, features function controls and a complete LCD display for viewing data and activating the unit, via a multilevel menu, with settable display language.
The controller provides water temperature control for the heating systems, cooling systems (only for reversible units), as well as for domestic hot water (only for reversible units). These different temperatures are managed automatically based on the different conditions in which the system operates, with the possibility to assign specific levels of priority to domestic hot water production, depending on the needs of the application.
The regulation is based on the exclusive QuickMind algorithm, including self-adaptive control logics, beneficial in low water content systems. As alternatives the proportional- or proportional- integral regulations are also available.
Diagnostics include complete alarm management, with “blackbox” functions (via PC) and alarm log (display or PC) for best analysis of unit be haviour. For systems made up of multiple units, differentiated device management means just a certain portion of the capacity installed can be dedicated to domestic water production, in this way ensuring more efficient energy distribution and, at the same time, guaranteeing simultaneous water delivery to the different distribution systems. The built-in clock can be used to create an operating profile containing up to 4 typical days and 10 time bands, essential for efficient programming of energy production and fundamental for managing the Legionella prevention cycles. Available time bands also for DHW production.
Supervision is available with different options, using proprietary devices or by integration into third party systems using ModBus, BACnet, BACnet-over-IP and Echelon LonWorks protocols.
A dedicated wall-mounted keypad can be used for remote control of all the functions.
Optionally (VPF package), capacity modulation can be integrated with hydraulic flow modulation, thanks to inverter-driven pumps and to specific resources for the hydraulic circuit.



NX-WN			0122	0152	0182	0202	0252	0262	0302	0352
Power supply		V/ph/Hz	400/3/50	400/3/50	400/3/50	400/3/50	400/3/50	400/3/50	400/3/50	400/3/50
PERFORMANCE										
COOLING ONLY (GROSS VALUE)										
Cooling capacity	(1)	kW	37,5	46,7	55,0	63,9	70,8	80,5	94,6	109
Total power input	(1)	kW	7,73	9,52	11,1	12,9	14,1	16,3	19,2	22,1
EER	(1)	kW/kW	4,85	4,91	4,95	4,95	5,02	4,94	4,93	4,92
ESEER	(1)	kW/kW	6,29	6,45	6,18	6,22	6,46	6,16	6,24	6,38
COOLING ONLY (EN14511 VALUE)										
Cooling capacity	(1)(2)	kW	37,4	46,6	54,8	63,7	70,6	80,3	94,4	108
EER	(1)(2)	kW/kW	4,67	4,72	4,78	4,78	4,85	4,77	4,77	4,76
ESEER	(1)(2)	kW/kW	5,80	5,95	5,73	5,78	5,99	5,73	5,83	5,90
Cooling energy class			B	B	B	B	B	B	B	B
HEATING ONLY (GROSS VALUE)										
Total heating capacity	(3)	kW	41,8	52,1	61,2	71,5	78,6	89,5	105	121
Total power input	(3)	kW	9,69	11,9	13,7	16,0	17,7	20,3	23,7	27,2
COP		kW/kW	4,31	4,38	4,47	4,47	4,44	4,41	4,44	4,44
HEATING ONLY (EN14511 VALUE)										
Total heating capacity	(3)(2)	kW	41,9	52,3	61,4	71,7	78,8	89,8	106	121
COP	(3)(2)	kW/kW	4,16	4,22	4,31	4,32	4,29	4,27	4,30	4,31
Cooling energy class			B	B	B	B	B	B	B	B
ENERGY EFFICIENCY										
SEASONAL EFFICIENCY IN COOLING (Reg. EU 2016/2281)										
Ambient refrigeration										
Prated,c	(11)	kW	-	-	-	-	-	-	-	-
SEER	(11)(12)		-	-	-	-	-	-	-	-
Performance ηs	(11)(13)	%	-	-	-	-	-	-	-	-
SEASONAL EFFICIENCY IN HEATING (Reg. EU 813/2013)										
PDesign	(4)	kW	50,4	62,6	73,6	85,6	94,8	108	127	146
SCOP	(4)(14)		5,64	5,95	5,89	5,92	6,07	5,89	5,94	6,00
Performance ηs	(4)(15)	%	218	230	228	229	235	227	230	232
Seasonal efficiency class	(4)		A++	A++	A++	-	-	-	-	-
PDesign	(5)	kW	45,4	56,7	66,4	78,1	85,4	97,0	114	131
SCOP	(5)(14)		4,50	4,58	4,64	4,64	4,67	4,62	4,64	4,69
Performance ηs	(5)(15)	%	172	175	178	178	179	177	178	179
Seasonal efficiency class	(5)		A++	A++	A++	-	-	-	-	-
EXCHANGERS										
HEAT EXCHANGER USER SIDE IN REFRIGERATION										
Water flow	(1)	l/s	1,79	2,23	2,63	3,06	3,39	3,85	4,52	5,20
Pressure drop	(1)	kPa	12,3	13,1	13,3	13,7	14,1	14,6	14,7	15,5
HEAT EXCHANGER USER SIDE IN HEATING										
Water flow	(3)	l/s	2,02	2,52	2,95	3,45	3,79	4,32	5,09	5,83
Pressure drop	(3)	kPa	15,6	16,7	16,8	17,5	17,7	18,4	18,6	19,5
HEAT EXCHANGER SOURCE SIDE IN REFRIGERATION										
Water flow	(1)	l/s	2,15	2,68	3,15	3,66	4,05	4,61	5,42	6,23
Pressure drop	(1)	kPa	17,7	18,9	19,1	19,7	20,1	21,0	21,1	22,2
HEAT EXCHANGER SOURCE SIDE IN HEATING										
Water flow	(3)	l/s	2,61	3,26	3,85	4,50	4,93	5,62	6,62	7,59
Pressure drop	(3)	kPa	26,0	28,0	28,5	29,7	29,9	31,2	31,5	32,9
REFRIGERANT CIRCUIT										
Compressors nr.		N°	2	2	2	2	2	2	2	2
No. Circuits		N°	1	1	1	1	1	1	1	1
Refrigerant charge		kg	3,80	4,20	5,00	5,50	6,10	8,60	10,0	11,6
NOISE LEVEL										
Sound Pressure	(6)	dB(A)	57	57	58	58	58	59	60	60
Sound power level in cooling	(7)(8)	dB(A)	73	73	74	74	74	75	76	77
Sound power level in heating	(7)(9)	dB(A)	74	74	75	75	75	76	77	78
SIZE AND WEIGHT										
A	(10)	mm	1225	1225	1225	1225	1225	1225	1225	1570
B	(10)	mm	885	885	885	885	885	885	885	885
H	(10)	mm	1495	1495	1495	1495	1495	1495	1495	1805
Operating weight	(10)	kg	390	400	430	440	480	500	540	680

Notes:
1 Plant (side) cooling exchanger water (in/out) 12°C/7°C; Source (side) heat exchanger water (in/out) 30°C/35°C.
2 Values in compliance with EN14511-3:2013.
3 Plant (side) heating exchanger water (in/out) 10°C/7°C; Source (side) heat exchanger water (in/out) 40°C/45°C
4 Seasonal space heating energy efficiency class LOW TEMPERATURE in AVERAGE climate conditions [REGULATION (EU) N. 813/2013]
5 Seasonal space heating energy efficiency class MEDIA TEMPERATURE in AVERAGE climate conditions [REGULATION (EU) N. 813/2013]
6 Average sound pressure level at 1m distance, unit in a free field on a reflective surface; non-binding value calculated from the sound power level.
7 Sound power on the basis of measurements made in compliance with ISO 9614.
8 Sound power level in cooling, indoors.
9 Sound power level in heating, indoors.
10 Unit in standard configuration/execution, without optional accessories.
11 Seasonal energy efficiency of the cooling environment [REGULATION (EU) N. 2016/2281]
12 Seasonal space heating energy index
13 Seasonal energy efficiency of the space cooling
14 Seasonal performance coefficient
15 Seasonal space heating energy efficiency
The units highlighted in this publication contain HFC R410A [GWP_{100} 2088] fluorinated greenhouse gases.

NX-WN			0402	0452	0502	0552	0602	0702	0802	0604
Power supply		V/ph/Hz	400/3/50	400/3/50	400/3/50	400/3/50	400/3/50	400/3/50	400/3/50	400/3/50
PERFORMANCE										
COOLING ONLY (GROSS VALUE)										
Cooling capacity	(1)	kW	123	138	154	177	200	225	252	187
Total power input	(1)	kW	24,9	28,2	31,5	35,9	40,4	46,2	52,1	39,2
EER	(1)	kW/kW	4,95	4,91	4,89	4,93	4,94	4,87	4,83	4,78
ESEER	(1)	kW/kW	6,13	6,23	6,08	6,22	6,18	6,27	5,99	6,35
COOLING ONLY (EN14511 VALUE)										
Cooling capacity	(1)(2)	kW	123	138	154	176	199	224	251	187
EER	(1)(2)	kW/kW	4,79	4,76	4,74	4,78	4,79	4,70	4,66	4,66
ESEER	(1)(2)	kW/kW	5,77	5,81	5,71	5,81	5,79	5,79	5,55	5,91
Cooling energy class			B	B	B	B	B	B	B	B
HEATING ONLY (GROSS VALUE)										
Total heating capacity	(3)	kW	137	154	172	197	222	251	281	208
Total power input	(3)	kW	30,7	34,7	38,8	44,1	49,6	56,4	63,2	47,9
COP		kW/kW	4,45	4,44	4,42	4,46	4,47	4,45	4,45	4,35
HEATING ONLY (EN14511 VALUE)										
Total heating capacity	(3)(2)	kW	137	154	172	197	222	252	282	209
COP	(3)(2)	kW/kW	4,31	4,31	4,29	4,33	4,33	4,29	4,28	4,25
Cooling energy class			B	B	B	B	B	B	B	B
ENERGY EFFICIENCY										
SEASONAL EFFICIENCY IN COOLING (Reg. EU 2016/2281)										
Ambient refrigeration										
Prated,c	(11)	kW	-	-	-	-	-	-	-	-
SEER	(11)(12)		-	-	-	-	-	-	-	-
Performance ηs	(11)(13)	%	-	-	-	-	-	-	-	-
SEASONAL EFFICIENCY IN HEATING (Reg. EU 813/2013)										
PDesign	(4)	kW	165	186	207	237	268	302	337	251
SCOP	(4)(14)		5,93	5,97	5,91	5,95	5,96	5,87	5,70	6,05
Performance ηs	(4)(15)	%	229	231	229	230	230	227	220	234
Seasonal efficiency class	(4)		-	-	-	-	-	-	-	-
PDesign	(5)	kW	148	167	186	213	240	272	306	226
SCOP	(5)(14)		4,67	4,70	4,65	4,72	4,70	4,71	4,60	4,71
Performance ηs	(5)(15)	%	179	180	178	181	180	181	176	180
Seasonal efficiency class	(5)		-	-	-	-	-	-	-	-
EXCHANGERS										
HEAT EXCHANGER USER SIDE IN REFRIGERATION										
Water flow	(1)	l/s	5,89	6,62	7,36	8,46	9,55	10,76	12,04	8,95
Pressure drop	(1)	kPa	15,7	16,2	16,8	17,9	19,6	24,9	28,6	13,4
HEAT EXCHANGER USER SIDE IN HEATING										
Water flow	(3)	l/s	6,59	7,43	8,28	9,49	10,70	12,11	13,58	10,06
Pressure drop	(3)	kPa	19,6	20,4	21,3	22,5	24,6	31,5	36,3	16,9
HEAT EXCHANGER SOURCE SIDE IN REFRIGERATION										
Water flow	(1)	l/s	7,06	7,94	8,83	10,14	11,44	12,91	14,47	10,78
Pressure drop	(1)	kPa	22,5	23,3	24,2	25,7	28,1	35,9	41,3	19,4
HEAT EXCHANGER SOURCE SIDE IN HEATING										
Water flow	(3)	l/s	8,58	9,67	10,76	12,37	13,95	15,77	17,68	13,02
Pressure drop	(3)	kPa	33,3	34,5	36,0	38,2	41,8	53,5	61,6	28,3
REFRIGERANT CIRCUIT										
Compressors nr.		N°	2	2	2	2	2	2	2	4
No. Circuits		N°	1	1	1	1	1	1	1	2
Refrigerant charge		kg	13,1	14,8	15,7	18,8	21,4	22,4	22,4	20,0
NOISE LEVEL										
Sound Pressure	(6)	dB(A)	60	61	61	62	62	65	66	69
Sound power level in cooling	(7)(8)	dB(A)	77	78	78	79	79	82	83	86
Sound power level in heating	(7)(9)	dB(A)	78	79	79	80	80	83	84	87
SIZE AND WEIGHT										
A	(10)	mm	1570	1570	1570	1570	1570	1570	1570	2210
B	(10)	mm	885	885	885	885	885	885	885	885
H	(10)	mm	1805	1805	1805	1805	1805	1805	1805	1805
Operating weight	(10)	kg	760	810	850	890	930	950	970	920

Notes:
1 Plant (side) cooling exchanger water (in/out) 12°C/7°C; Source (side) heat exchanger water (in/out) 30°C/35°C.
2 Values in compliance with EN14511-3:2013.
3 Plant (side) heating exchanger water (in/out) 10°C/7°C; Source (side) heat exchanger water (in/out) 40°C/45°C
4 Seasonal space heating energy efficiency class LOW TEMPERATURE in AVERAGE climate conditions [REGULATION (EU) N. 813/2013]
5 Seasonal space heating energy efficiency class MEDIA TEMPERATURE in AVERAGE climate conditions [REGULATION (EU) N. 813/2013]
6 Average sound pressure level at 1m distance, unit in a free field on a reflective surface; non-binding value calculated from the sound power level.
7 Sound power on the basis of measurements made in compliance with ISO 9614.
8 Sound power level in cooling, indoors.
9 Sound power level in heating, indoors.
10 Unit in standard configuration/execution, without optional accessories.
11 Seasonal energy efficiency of the cooling environment [REGULATION (EU) N. 2016/2281]
12 Seasonal space heating energy index
13 Seasonal energy efficiency of the space cooling
14 Seasonal performance coefficient
15 Seasonal space heating energy efficiency
The units highlighted in this publication contain HFC R410A [GWP_{100} 2088] fluorinated greenhouse gases.

NX-WN			0704	0804	0904	1004	1104	1204
Power supply		V/ph/Hz	400/3/50	400/3/50	400/3/50	400/3/50	400/3/50	400/3/50
PERFORMANCE								
COOLING ONLY (GROSS VALUE)								
Cooling capacity	(1)	kW	215	244	275	306	351	396
Total power input	(1)	kW	45,0	50,7	57,2	63,8	72,7	81,9
EER	(1)	kW/kW	4,79	4,81	4,80	4,79	4,83	4,84
ESEER	(1)	kW/kW	6,41	6,33	6,41	6,30	6,39	6,36
COOLING ONLY (EN14511 VALUE)								
Cooling capacity	(1)(2)	kW	215	244	274	305	350	395
EER	(1)(2)	kW/kW	4,67	4,70	4,67	4,65	4,68	4,68
ESEER	(1)(2)	kW/kW	5,95	5,90	5,90	5,81	5,83	5,78
Cooling energy class			B	B	B	B	B	B
HEATING ONLY (GROSS VALUE)								
Total heating capacity	(3)	kW	239	270	305	340	390	439
Total power input	(3)	kW	55,0	62,0	70,1	78,0	88,8	99,9
COP		kW/kW	4,35	4,36	4,35	4,36	4,39	4,40
HEATING ONLY (EN14511 VALUE)								
Total heating capacity	(3)(2)	kW	240	271	306	341	391	440
COP	(3)(2)	kW/kW	4,25	4,26	4,24	4,23	4,25	4,24
Cooling energy class			B	B	B	B	B	B
ENERGY EFFICIENCY								
SEASONAL EFFICIENCY IN COOLING (Reg. EU 2016/2281)								
Ambient refrigeration								
Prated,c	(11)	kW	-	-	-	-	350	395
SEER	(11)(12)		-	-	-	-	5,69	5,63
Performance ηs	(11)(13)	%	-	-	-	-	220	217
SEASONAL EFFICIENCY IN HEATING (Reg. EU 813/2013)								
PDesign	(4)	kW	289	327	368	410	-	-
SCOP	(4)(14)		6,04	6,07	6,02	5,90	-	-
Performance ηs	(4)(15)	%	234	235	233	228	-	-
Seasonal efficiency class	(4)		-	-	-	-	-	-
PDesign	(5)	kW	259	293	331	369		
SCOP	(5)(14)		4,69	4,76	4,78	4,72		
Performance ηs	(5)(15)	%	180	182	183	181		
Seasonal efficiency class	(5)		-	-	-	-	-	-
EXCHANGERS								
HEAT EXCHANGER USER SIDE IN REFRIGERATION								
Water flow	(1)	l/s	10,30	11,67	13,14	14,62	16,80	18,94
Pressure drop	(1)	kPa	14,4	15,4	18,9	21,7	24,6	28,8
HEAT EXCHANGER USER SIDE IN HEATING								
Water flow	(3)	l/s	11,55	13,05	14,73	16,42	18,82	21,20
Pressure drop	(3)	kPa	18,2	19,3	23,8	27,4	30,8	36,0
HEAT EXCHANGER SOURCE SIDE IN REFRIGERATION								
Water flow	(1)	l/s	12,40	14,03	15,80	17,59	20,19	22,76
Pressure drop	(1)	kPa	20,9	22,3	27,4	31,4	35,5	41,6
HEAT EXCHANGER SOURCE SIDE IN HEATING								
Water flow	(3)	l/s	14,95	16,90	19,06	21,25	24,41	27,50
Pressure drop	(3)	kPa	30,4	32,4	39,9	45,9	51,9	60,7
REFRIGERANT CIRCUIT								
Compressors nr.		N°	4	4	4	4	4	4
No. Circuits		N°	2	2	2	2	2	2
Refrigerant charge		kg	23,5	27,5	33,3	36,2	42,1	48,0
NOISE LEVEL								
Sound Pressure	(6)	dB(A)	70	71	72	73	74	74
Sound power level in cooling	(7)(8)	dB(A)	87	88	89	90	91	91
Sound power level in heating	(7)(9)	dB(A)	88	89	90	91	92	92
SIZE AND WEIGHT								
A	(10)	mm	2210	2650	2650	2650	2650	2650
B	(10)	mm	885	885	885	885	885	885
H	(10)	mm	1805	1805	1805	1805	1805	1805
Operating weight	(10)	kg	1100	1300	1450	1530	1630	1740

Notes:
1 Plant (side) cooling exchanger water (in/out) 12°C/7°C; Source (side) heat exchanger water (in/out) 30°C/35°C.
2 Values in compliance with EN14511-3:2013.
3 Plant (side) heating exchanger water (in/out) 10°C/7°C; Source (side) heat exchanger water (in/out) 40°C/45°C
4 Seasonal space heating energy efficiency class LOW TEMPERATURE in AVERAGE climate conditions [REGULATION (EU) N. 813/2013]
5 Seasonal space heating energy efficiency class MEDIA TEMPERATURE in AVERAGE climate conditions [REGULATION (EU) N. 813/2013]
6 Average sound pressure level at 1m distance, unit in a free field on a reflective surface; non-binding value calculated from the sound power level.
7 Sound power on the basis of measurements made in compliance with ISO 9614.
8 Sound power level in cooling, indoors.
9 Sound power level in heating, indoors.
10 Unit in standard configuration/execution, without optional accessories.
11 Seasonal energy efficiency of the cooling environment [REGULATION (EU) N. 2016/2281]
12 Seasonal space heating energy index
13 Seasonal energy efficiency of the space cooling
14 Seasonal performance coefficient
15 Seasonal space heating energy efficiency
The units highlighted in this publication contain HFC R410A [GWP_{100} 2088] fluorinated greenhouse gases.
Certified data in EUROVENT

Size 0122-802

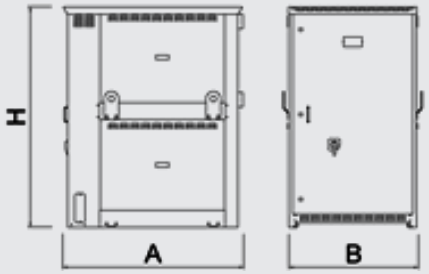

Size 0604-1204

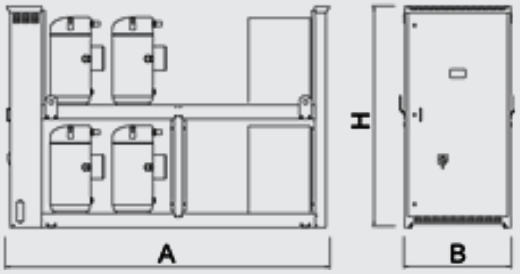

HEAT PUMPS

WW-HT 0071 - 0302

Water cooled optimized heat pumps for heating, high water temperature 27,5-109 kW



WW(H)-HT represent the best solution for systems in which there is the need to produce high temperature hot water for both space heating and hot water purposes. The special compressor used guarantees hot water production up to 65°C.
Version WW-HT, heating only, or version WWH-HT, reversible on hydraulic side, can completely meet any system and application requirements, with a vast range of models, hydronic configurations and accessories.
The new WW(H)-HT range is ideal for commercial (offices, hotels), domestic (homes, apartments) or industrial installations (domestic hot water production only).

Version

B	Basic

Configurations

-	Basic function

Features

REFRIGERANT GAS R410A
The use of R410A allowed to achive better energy efficiencies with environment full respect (ODP = 0)
ELECTRONIC EXPANSION VALVE SUPPLIED STANDARD
The use of the electronic expansion valve generates considerable benefits, especially in cases of variable demand and different external conditions. It was introduced into these units as a result of accurate design choices concerning the cooling circuit and the optimisation of operation in various different working conditions
EXTENSIVE RANGE OF OPERATION
Production of high temperature hot water up to 65°C for space heating and hot water purposes.
STACKABLE UNITS
The special structure of the units (without on-board pumps) is designed to allow two units to be stacked on top of each other without any additional accessories, reducing the space requirements when needing to expand system capacity. The capacity of two heat pumps with the footprint of a single unit.
INTEGRATED HYDRONIC MODULE
The units can be supplied with a hydronic kit on the user side and a hydronic kit on the source side. These kits include all the water circuit components so as to optimize installation space, times and costs.
In addition, a vast selection of pumps available, up to 13 different models, for both the user side and the source side, means the best solution can always be configured in terms of flow-rate, available pressure head and power consumption.
INTEGRATED CONDENSATION´S CONTROL
The electronics of the units manages the most suitable condensing control for each type of application: two-way modulating valve, inverter control for the pumps.
RENEWABLE ENERGY FOR COMMERCIAL INSTALLATIONS
Best solution in centralised residential systems such as apartment buildings, where the cost of renovation needs to be limited by keeping the same distribution system with radiators, while offering a source of renewable energy.
MODULAR CONFIGURATION
Modular configuration with capacity extension up to 400kW for medium- and high-capacity installations. Ability of managing different thermal loads according to the requirements of both heating and the domestic hot water systems.

Accessory

- Soft start
- Stackable units
- User side and source side hydronic kit (n°13 single pumps and n°13 twin head-pumps available)
- Water connections can be placed on the right-hand side, top or rear.
- Extra soundproof lining to reduce the noise emissions.
- Outside air temperature probe for plant water set point compensation.
- Three-way valve for domestic hot water
- Set-up for remote connectivity with ModBus/Echelon protocol cards

Controls

Electronic control W3000TE
The W3000TE controller is the new device designed especially for heat pump applications with incorporated logic for high and very high temperature hot water production. The keypad features function controls and a complete LCD display for viewing data and activating the unit, via a multilevel menu, with settable display language. The controller provides temperature control for the heating and cooling systems in the air-conditioned rooms, as well as for domestic hot water. These different temperatures are managed automatically based on the different conditions in which the system operates, with the possibility to assign specific levels of priority to domestic hot water production, depending on the needs of the application. Diagnostics include complete alarm management, with “blackbox” functions (via PC) and alarm log (display or PC) for best analysis of unit be haviour. For systems made up of multiple units, differentiated device management means just a certain portion of the capacity installed can be dedicated to domestic water production, in this way ensuring more efficient energy distribution and, at the same time, guaranteeing simultaneous water delivery to the different distribution systems. The built-in clock can be used to create an operating profile containing up to 4 typical days and 10 time bands, essential for efficient programming of energy production, and fundamental for managing the Legionella prevention cycles.
Supervision is available with different options, using proprietarydevices or by integration into third party systems using ModBus, BACnet, BACnet-over-IP and Echelon LonWorks protocols.
A dedicated wall-mounted keypad can be used for remote control of all the functions.



WW-HT			0071	0091	0101	0121	0131	0151
Power supply		V/ph/Hz	400/3/50	400/3/50	400/3/50	400/3/50	400/3/50	400/3/50
PERFORMANCE								
HEATING ONLY (GROSS VALUE)								
Total heating capacity	(1)	kW	27,5	32,8	37,0	42,6	47,8	54,6
Total power input	(1)	kW	6,20	7,33	8,15	9,33	10,4	11,9
COP		kW/kW	4,44	4,47	4,54	4,57	4,60	4,59
HEATING ONLY (EN14511 VALUE)								
Total heating capacity	(1)(2)	kW	27,6	32,9	37,1	42,7	48,0	54,8
COP	(1)(2)	kW/kW	4,21	4,26	4,32	4,34	4,38	4,38
ENERGY EFFICIENCY								
SEASONAL EFFICIENCY IN HEATING (Reg. EU 813/2013)								
PDesign	(3)	kW	32,5	38,7	43,9	50,1	56,5	64,7
SCOP	(3)(9)		5,00	4,97	5,16	5,15	5,26	5,18
Performance ηs	(3)(10)	%	192	191	199	198	203	199
Seasonal efficiency class	(3)		A++	A++	A++	A++	A++	A++
PDesign	(4)	kW	30,1	36,0	40,4	46,6	52,2	59,6
SCOP	(4)(9)		4,03	4,08	4,15	4,19	4,21	4,19
Performance ηs	(4)(10)	%	153	155	158	160	160	160
Seasonal efficiency class	(4)		A++	A++	A++	A++	A++	A++
EXCHANGERS								
HEAT EXCHANGER USER SIDE IN HEATING								
Water flow	(1)	l/s	1,33	1,59	1,79	2,06	2,31	2,63
Pressure drop	(1)	kPa	11,2	11,7	13,1	14,0	15,2	16,5
HEAT EXCHANGER SOURCE SIDE IN HEATING								
Water flow	(1)	l/s	1,73	2,07	2,34	2,69	3,03	3,46
Pressure drop	(1)	kPa	42,2	44,0	43,5	45,8	45,7	44,0
REFRIGERANT CIRCUIT								
Compressors nr.		N°	1	1	1	1	1	1
No. Circuits		N°	1	1	1	1	1	1
Refrigerant charge		kg	2,80	3,30	3,70	4,30	4,90	5,80
NOISE LEVEL								
Sound Pressure	(5)	dB(A)	51	52	53	54	55	55
Sound power level in heating	(6)(7)	dB(A)	66	67	68	69	70	70
SIZE AND WEIGHT								
A	(8)	mm	1200	1200	1200	1200	1200	1200
B	(8)	mm	600	600	600	600	600	600
H	(8)	mm	855	855	855	855	855	855
Operating weight	(8)	kg	235	245	250	255	265	275

Notes:
1 Plant (side) heat exchanger water (in/out) 40°C/45°C; Source (side) heat exchanger water (in/out) 10°C/7°C.
2 Values in compliance with EN14511-3:2013.
3 Seasonal space heating energy efficiency class LOW TEMPERATURE in AVERAGE climate conditions [REGULATION (EU) N. 813/2013]
4 Seasonal space heating energy efficiency class MEDIA TEMPERATURE in AVERAGE climate conditions [REGULATION (EU) N. 813/2013]
5 Average sound pressure level at 1m distance, unit in a free field on a reflective surface; non-binding value calculated from the sound power level.
6 Sound power on the basis of measurements made in compliance with ISO 9614.
7 Sound power level in heating, indoors.
8 Unit in standard configuration/execution, without optional accessories.
9 Seasonal performance coefficient
10 Seasonal space heating energy efficiency

WW-HT			0152	0182	0202	0252	0262	0302
Power supply		V/ph/Hz	400/3/50	400/3/50	400/3/50	400/3/50	400/3/50	400/3/50
PERFORMANCE								
HEATING ONLY (GROSS VALUE)								
Total heating capacity	(1)	kW	55,0	65,7	74,0	85,3	95,5	109
Total power input	(1)	kW	12,4	14,6	16,3	18,7	20,8	23,7
COP		kW/kW	4,44	4,50	4,54	4,56	4,59	4,61
HEATING ONLY (EN14511 VALUE)								
Total heating capacity	(1)(2)	kW	55,2	65,9	74,3	85,7	95,9	110
COP	(1)(2)	kW/kW	4,24	4,32	4,34	4,37	4,39	4,41
ENERGY EFFICIENCY								
SEASONAL EFFICIENCY IN HEATING (Reg. EU 813/2013)								
PDesign	(3)	kW	65,1	77,4	87,9	101	113	129
SCOP	(3)(9)		5,39	5,41	5,56	5,57	5,67	5,59
Performance ηs	(3)(10)	%	208	208	214	215	219	216
Seasonal efficiency class	(3)		A++	-	-	-	-	-
PDesign	(4)	kW	60,1	72,0	80,8	93,4	104	119
SCOP	(4)(9)		4,45	4,51	4,59	4,60	4,67	4,64
Performance ηs	(4)(10)	%	170	172	176	176	179	178
Seasonal efficiency class	(4)		A++	-	-	-	-	-
EXCHANGERS								
HEAT EXCHANGER USER SIDE IN HEATING								
Water flow	(1)	l/s	2,65	3,17	3,57	4,12	4,61	5,27
Pressure drop	(1)	kPa	16,8	20,1	27,9	28,6	29,7	30,6
HEAT EXCHANGER SOURCE SIDE IN HEATING								
Water flow	(1)	l/s	3,45	4,14	4,68	5,39	6,05	6,92
Pressure drop	(1)	kPa	43,8	38,2	41,1	42,4	44,2	45,6
REFRIGERANT CIRCUIT								
Compressors nr.		N°	2	2	2	2	2	2
No. Circuits		N°	1	1	1	1	1	1
Refrigerant charge		kg	5,80	5,70	6,70	7,80	8,70	10,0
NOISE LEVEL								
Sound Pressure	(5)	dB(A)	56	56	57	57	58	58
Sound power level in heating	(6)(7)	dB(A)	71	71	72	72	73	73
SIZE AND WEIGHT								
A	(8)	mm	1470	1470	1470	1470	1470	1470
B	(8)	mm	885	885	885	885	885	885
H	(8)	mm	900	900	900	900	900	900
Operating weight	(8)	kg	405	435	445	465	475	495

Notes:
1 Plant (side) heat exchanger water (in/out) 40°C/45°C; Source (side) heat exchanger water (in/out) 10°C/7°C.
2 Values in compliance with EN14511-3:2013.
3 Seasonal space heating energy efficiency class LOW TEMPERATURE in AVERAGE climate conditions [REGULATION (EU) N. 813/2013]
4 Seasonal space heating energy efficiency class MEDIA TEMPERATURE in AVERAGE climate conditions [REGULATION (EU) N. 813/2013]
5 Average sound pressure level at 1m distance, unit in a free field on a reflective surface; non-binding value calculated from the sound power level.
6 Sound power on the basis of measurements made in compliance with ISO 9614.
7 Sound power level in heating, indoors.
8 Unit in standard configuration/execution, without optional accessories.
9 Seasonal performance coefficient
10 Seasonal space heating energy efficiency

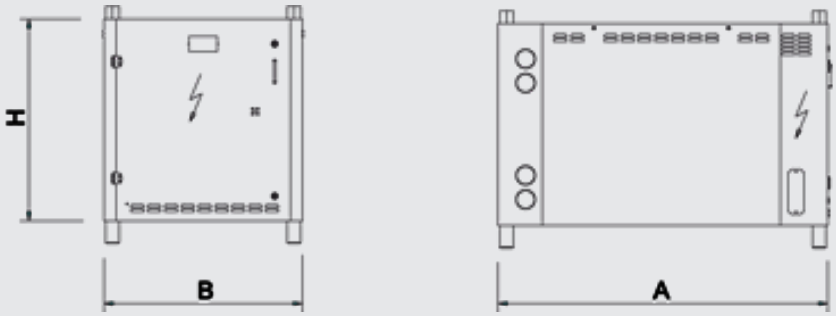

HEAT PUMPS

EW-HT 0152 - 0612

Water to water heat pumps, heating only, very high temperature water production 70,2-279 kW



Version

B	Basic

Configurations

-	Basic function

Features

WIDE OPERATING RANGE

Hot water production up to 78°C (evaporator water outlet up to 40°C).

MAXIMUM RELIABILITY

Unit with two independent refrigerant circuit, designed to ensure maximum efficiency at full load, ensuring uninterrupted operation even in the event of temporary stop of one of the two circuits.

ELECTRONIC EXPANSION VALVE SUPPLIED STANDARD

The use of the electronic expansion valve generates considerable benefits, especially in cases of variable demand and different external conditions. It was introduced into these units as a result of accurate design choices concerning the cooling circuit and the optimisation of operation in various different working conditions

RENEWABLE ENERGY FOR COMMERCIAL INSTALLATIONS

Best solution in centralised residential systems such as apartment buildings, where the cost of renovation needs to be limited by keeping the same distribution system with radiators, while offering a source of renewable energy.

COMPACTNESS

Reduced dimensions, for easy installation even in sites with space´ constraints

Accessory

- Soft starters
- Thicker soundproofing cladding
- Set-up for remote connectivity with ModBus/Echelon protocol cards
- Remote control keyboard (distance to 200m and to 500m)

EW-HT represents the best solution for systems where very high temperature water is needed, for domestic hot water production, space heating or industrial process purpose.
The special compressor adopted grants hot water production up to 78°C and allows high evaporation temperature (evaporator leaving water temperature up to 40°C). The extraordinary operating limits ensure the perfect integration of the unit in any application, such as 4-pipe systems for residential and commercial buildings, industrial process heat recovery, district heating systems, IT-cooling plants.

Controls

Electronic control W3000TE

The W3000TE controller offers advanced functions and algorithms.
The Compact keypad features an easy-to-use interface and a complete LCD display that allows consulting and intervening on the unit by means of a multi-language menu (19 languages are available).
The regulation is based on the patented “Quickmind” water temperature regulation logic uses self-adapting control to maintain flow temperatures and optimise performance even in low water content scenarios. As an alternative, the proportional or proportional-integral regulations are also available.
The diagnostics comprises a complete alarm management system, with the “black-box” (via PC) and the alarm history display (via display or also PC) for enhanced analysis of the unit operation
Optional proprietary devices can perform the adjustment of the resources in systems made of several units. Consumption metering and performance measurement are possible as well.
Supervision can be easily developed via proprietary devices or the integration in third party systems by means of the most common protocols as ModBus, Bacnet, Bacnet-over-IP, LonWorks.
Compatibility with the remote keyboard (up to 8 units).
The programmable timer manages a weekly schedule organised into time bands to optimise unit performance by minimising power consumption during periods of inactivity. Up to 10 daily time bands can be associated with different operating set points.
The defrosting (air source reversible unit only) follows a proprietary self-adaptive logic, which features the monitoring of several operational parameters. This allows to reduce the number and duration of the defrost cycles, with a benefit for the overall energy efficiency.



EW-HT			0152	0182	0202	0262	0302	0412	0512	0612
Power supply		V/ph/Hz	400/3/50	400/3/50	400/3/50	400/3/50	400/3/50	400/3/50	400/3/50	400/3/50
PERFORMANCE										
HEATING ONLY (GROSS VALUE)										
Total heating capacity	(1)	kW	70,2	79,3	92,5	113	139	181	225	279
Total power input	(1)	kW	17,0	18,9	22,0	27,9	34,2	43,7	55,1	67,6
COP	(1)	kW/kW	4,13	4,20	4,20	4,05	4,08	4,14	4,08	4,13
HEATING ONLY (EN14511 VALUE)										
Total heating capacity	(1)(2)	kW	70,4	79,5	92,7	113	140	181	225	280
COP	(1)(2)	kW/kW	4,01	4,07	4,08	3,94	3,98	4,04	4,01	4,06
ENERGY EFFICIENCY										
SEASONAL EFFICIENCY IN HEATING (Reg. EU 813/2013)										
PDesign	(3)	kW	38,6	43,6	50,0	61,6	78,1	104	128	157
SCOP	(3)(8)		3,27	3,39	3,45	3,30	3,30	3,25	3,27	3,30
Performance ηs	(3)(9)	%	123	128	130	124	124	122	123	124
Seasonal efficiency class	(3)		A+	A++	A++	A+	-	-	-	-
EXCHANGERS										
HEAT EXCHANGER USER SIDE IN HEATING										
Water flow	(1)	l/s	2,15	2,42	2,83	3,45	4,26	5,52	6,87	8,54
Pressure drop	(1)	kPa	23,9	25,0	24,2	24,2	19,7	19,8	19,8	20,1
HEAT EXCHANGER SOURCE SIDE IN HEATING										
Water flow	(1)	l/s	2,62	2,97	3,47	4,19	5,18	6,74	8,35	10,41
Pressure drop	(1)	kPa	45,4	46,7	51,8	53,8	49,7	50,1	37,6	37,7
REFRIGERANT CIRCUIT										
Compressors nr.		N°	2	2	2	2	2	2	2	2
No. Circuits		N°	2	2	2	2	2	2	2	2
Refrigerant charge		kg	6,00	7,00	8,00	9,00	10,0	11,0	12,0	13,0
NOISE LEVEL										
Sound Pressure	(4)	dB(A)	58	58	58	60	60	62	62	64
Sound power level in heating	(5)(6)	dB(A)	74	74	74	76	76	78	78	80
SIZE AND WEIGHT										
A	(7)	mm	1223	1223	1223	1223	1223	1223	1223	1223
B	(7)	mm	877	877	877	877	877	877	877	877
H	(7)	mm	1496	1496	1496	1496	1496	1496	1496	1496
Operating weight	(7)	kg	365	380	390	415	430	610	675	740

Notes:
1 Plant (side) heat exchanger water (in/out) 70°C/78°C; Source (side) heat exchanger water (in/out) 45°C/40°C.
2 Values in compliance with EN14511-3:2013.
3 Seasonal space heating energy efficiency class MEDIA TEMPERATURE in AVERAGE climate conditions [REGULATION (EU) N. 813/2013]
4 Average sound pressure level at 1m distance, unit in a free field on a reflective surface; non-binding value calculated from the sound power level.
5 Sound power on the basis of measurements made in compliance with ISO 9614.
6 Sound power level in heating, indoors.
7 Unit in standard configuration/execution, without optional accessories.
8 Seasonal performance coefficient
9 Seasonal space heating energy efficiency

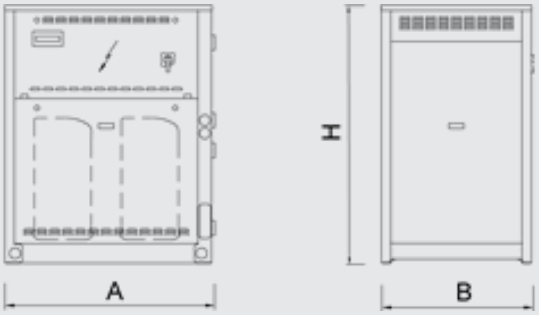

HEAT PUMPS

WWH-HT 0071 - 0302

Water cooled optimized heat pumps for heating, high water temperature 23,6-94,2 kW



WW(H)-HT represent the best solution for systems in which there is the need to produce high temperature hot water for both space heating and hot water purposes. The special compressor used guarantees hot water production up to 65°C.
Version WW-HT, heating only, or version WWH-HT, reversible on hydraulic side, can completely meet any system and application requirements, with a vast range of models, hydronic configurations and accessories.
The new WW(H)-HT range is ideal for commercial (offices, hotels), domestic (homes, apartments) or industrial installations (domestic hot water production only).

Version

B	Basic

Configurations

-	Basic function
H	Function with heat pump, reversible on hydraulic side

Features

REFRIGERANT GAS R410A
The use of R410A allowed to achive better energy efficiencies with environment full respect (ODP = 0)
ELECTRONIC EXPANSION VALVE SUPPLIED STANDARD
The use of the electronic expansion valve generates considerable benefits, especially in cases of variable demand and different external conditions. It was introduced into these units as a result of accurate design choices concerning the cooling circuit and the optimisation of operation in various different working conditions
EXTENSIVE RANGE OF OPERATION
Production of high temperature hot water up to 65°C for space heating and hot water purposes.
STACKABLE UNITS
The special structure of the units (without on-board pumps) is designed to allow two units to be stacked on top of each other without any additional accessories, reducing the space requirements when needing to expand system capacity. The capacity of two heat pumps with the footprint of a single unit.
INTEGRATED HYDRONIC MODULE
The units can be supplied with a hydronic kit on the user side and a hydronic kit on the source side. These kits include all the water circuit components so as to optimize installation space, times and costs.
In addition, a vast selection of pumps available, up to 13 different models, for both the user side and the source side, means the best solution can always be configured in terms of flow-rate, available pressure head and power consumption.
INTEGRATED CONDENSATION´S CONTROL
The electronics of the units manages the most suitable condensing control for each type of application: two-way modulating valve, inverter control for the pumps.
RENEWABLE ENERGY FOR COMMERCIAL INSTALLATIONS
Best solution in centralised residential systems such as apartment buildings, where the cost of renovation needs to be limited by keeping the same distribution system with radiators, while offering a source of renewable energy.
MODULAR CONFIGURATION
Modular configuration with capacity extension up to 400kW for medium- and high-capacity installations. Ability of managing different thermal loads according to the requirements of both heating and the domestic hot water systems.

Accessory

- Soft start
- Stackable units
- User side and source side hydronic kit (n°13 single pumps and n°13 twin head-pumps available)
- Water connections can be placed on the right-hand side, top or rear.
- Extra soundproof lining to reduce the noise emissions.
- Outside air temperature probe for plant water set point compensation.
- Three-way valve for domestic hot water
- Set-up for remote connectivity with ModBus/Echelon protocol cards

Controls

Electronic control W3000TE
The W3000TE controller is the new device designed especially for heat pump applications with incorporated logic for high and very high temperature hot water production. The keypad features function controls and a complete LCD display for viewing data and activating the unit, via a multilevel menu, with settable display language. The controller provides temperature control for the heating and cooling systems in the air-conditioned rooms, as well as for domestic hot water. These different temperatures are managed automatically based on the different conditions in which the system operates, with the possibility to assign specific levels of priority to domestic hot water production, depending on the needs of the application. Diagnostics include complete alarm management, with “blackbox” functions (via PC) and alarm log (display or PC) for best analysis of unit be haviour. For systems made up of multiple units, differentiated device management means just a certain portion of the capacity installed can be dedicated to domestic water production, in this way ensuring more efficient energy distribution and, at the same time, guaranteeing simultaneous water delivery to the different distribution systems. The built-in clock can be used to create an operating profile containing up to 4 typical days and 10 time bands, essential for efficient programming of energy production, and fundamental for managing the Legionella prevention cycles.
Supervision is available with different options, using proprietarydevices or by integration into third party systems using ModBus, BACnet, BACnet-over-IP and Echelon LonWorks protocols.
A dedicated wall-mounted keypad can be used for remote control of all the functions.



WWH-HT			0071	0091	0101	0121	0131	0151
Power supply		V/ph/Hz	400/3/50	400/3/50	400/3/50	400/3/50	400/3/50	400/3/50
PERFORMANCE								
COOLING ONLY (GROSS VALUE)								
Cooling capacity	(1)	kW	23,6	28,0	32,0	36,6	41,3	47,1
Total power input	(1)	kW	5,22	6,22	6,86	7,86	8,68	10,1
EER	(1)	kW/kW	4,52	4,50	4,66	4,66	4,76	4,66
ESEER	(1)	kW/kW	4,81	4,73	4,97	4,92	5,02	4,90
COOLING ONLY (EN14511 VALUE)								
Cooling capacity	(1)(2)	kW	23,5	27,9	31,9	36,4	41,1	46,9
EER	(1)(2)	kW/kW	4,33	4,32	4,47	4,47	4,56	4,48
ESEER	(1)(2)	kW/kW	4,59	4,53	4,76	4,70	4,79	4,69
Cooling energy class			C	C	C	C	C	C
HEATING ONLY (GROSS VALUE)								
Total heating capacity	(3)	kW	27,5	32,8	37,0	42,6	47,8	54,6
Total power input	(3)	kW	6,20	7,33	8,15	9,33	10,4	11,9
COP		kW/kW	4,44	4,47	4,54	4,57	4,60	4,59
HEATING ONLY (EN14511 VALUE)								
Total heating capacity	(3)(2)	kW	27,6	32,9	37,1	42,7	48,0	54,8
COP	(3)(2)	kW/kW	4,21	4,26	4,32	4,34	4,38	4,38
Cooling energy class			B	B	B	B	B	B
ENERGY EFFICIENCY								
SEASONAL EFFICIENCY IN COOLING (Reg. EU 2016/2281)								
Ambient refrigeration								
Prated,c	(11)	kW	-	-	-	-	-	-
SEER	(11)(12)		-	-	-	-	-	-
Performance ηs	(11)(13)	%	-	-	-	-	-	-
SEASONAL EFFICIENCY IN HEATING (Reg. EU 813/2013)								
PDesign	(4)	kW	32,5	38,7	43,9	50,1	56,5	64,7
SCOP	(4)(14)		5,12	5,07	5,26	5,23	5,34	5,24
Performance ηs	(4)(15)	%	197	195	202	201	206	202
Seasonal efficiency class	(4)		A++	A++	A++	A++	A++	A++
PDesign	(5)	kW	30,1	36,0	40,4	46,6	52,2	59,6
SCOP	(5)(14)		4,12	4,15	4,22	4,25	4,26	4,24
Performance ηs	(5)(15)	%	157	158	161	162	162	162
Seasonal efficiency class	(5)		A++	A++	A++	A++	A++	A++
EXCHANGERS								
HEAT EXCHANGER USER SIDE IN REFRIGERATION								
Water flow	(1)	l/s	1,13	1,34	1,53	1,75	1,97	2,25
Pressure drop	(1)	kPa	18,0	18,5	18,6	19,3	19,4	18,6
HEAT EXCHANGER USER SIDE IN HEATING								
Water flow	(3)	l/s	1,73	2,07	2,34	2,69	3,03	3,46
Pressure drop	(3)	kPa	42,2	44,0	43,5	45,8	45,7	44,0
HEAT EXCHANGER SOURCE SIDE IN REFRIGERATION								
Water flow	(1)	l/s	1,37	1,63	1,85	2,11	2,38	2,72
Pressure drop	(1)	kPa	11,9	12,4	14,0	14,8	16,2	17,6
HEAT EXCHANGER SOURCE SIDE IN HEATING								
Water flow	(3)	l/s	1,33	1,59	1,79	2,06	2,31	2,63
Pressure drop	(3)	kPa	11,2	11,7	13,1	14,0	15,2	16,5
REFRIGERANT CIRCUIT								
Compressors nr.		N°	1	1	1	1	1	1
No. Circuits		N°	1	1	1	1	1	1
Refrigerant charge		kg	2,80	3,30	3,70	4,30	4,90	5,80
NOISE LEVEL								
Sound Pressure	(6)	dB(A)	51	52	53	54	55	55
Sound power level in cooling	(7)(8)	dB(A)	66	67	68	69	70	70
Sound power level in heating	(7)(9)	dB(A)	66	67	68	69	70	70
SIZE AND WEIGHT								
A	(10)	mm	1200	1200	1200	1200	1200	1200
B	(10)	mm	600	600	600	600	600	600
H	(10)	mm	855	855	855	855	855	855
Operating weight	(10)	kg	235	245	250	255	265	275

Notes:
1 Plant (side) cooling exchanger water (in/out) 12°C/7°C; Source (side) heat exchanger water (in/out) 30°C/35°C.
2 Values in compliance with EN14511-3:2013.
3 Plant (side) heating exchanger water (in/out) 40°C/45°C; Source (side) heat exchanger water (in/out) 10°C/7°C
4 Seasonal space heating energy efficiency class LOW TEMPERATURE in AVERAGE climate conditions [REGULATION (EU) N. 813/2013]
5 Seasonal space heating energy efficiency class MEDIA TEMPERATURE in AVERAGE climate conditions [REGULATION (EU) N. 813/2013]
6 Average sound pressure level at 1m distance, unit in a free field on a reflective surface; non-binding value calculated from the sound power level.
7 Sound power on the basis of measurements made in compliance with ISO 9614.
8 Sound power level in cooling, indoors.
9 Sound power level in heating, indoors.
10 Unit in standard configuration/execution, without optional accessories.
11 Seasonal energy efficiency of the cooling environment [REGULATION (EU) N. 2016/2281]
12 Seasonal space heating energy index
13 Seasonal energy efficiency of the space cooling
14 Seasonal performance coefficient
15 Seasonal space heating energy efficiency
The units highlighted in this publication contain HFC R410A [GWP_{100} 2088] fluorinated greenhouse gases.

WWH-HT			0152	0182	0202	0252	0262	0302
Power supply		V/ph/Hz	400/3/50	400/3/50	400/3/50	400/3/50	400/3/50	400/3/50
PERFORMANCE								
COOLING ONLY (GROSS VALUE)								
Cooling capacity	(1)	kW	47,2	56,0	64,0	73,2	82,5	94,2
Total power input	(1)	kW	10,4	12,4	13,7	15,7	17,3	20,2
EER	(1)	kW/kW	4,54	4,52	4,67	4,66	4,77	4,66
ESEER	(1)	kW/kW	5,63	5,49	5,80	5,76	5,86	5,72
COOLING ONLY (EN14511 VALUE)								
Cooling capacity	(1)(2)	kW	47,0	55,8	63,8	73,0	82,2	93,9
EER	(1)(2)	kW/kW	4,36	4,35	4,48	4,47	4,57	4,48
ESEER	(1)(2)	kW/kW	5,19	5,09	5,31	5,29	5,38	5,27
Cooling energy class			C	C	C	C	C	C
HEATING ONLY (GROSS VALUE)								
Total heating capacity	(3)	kW	55,0	65,7	74,0	85,3	95,5	109
Total power input	(3)	kW	12,4	14,6	16,3	18,7	20,8	23,7
COP		kW/kW	4,44	4,50	4,54	4,56	4,59	4,61
HEATING ONLY (EN14511 VALUE)								
Total heating capacity	(3)(2)	kW	55,2	65,9	74,3	85,7	95,9	110
COP	(3)(2)	kW/kW	4,24	4,32	4,34	4,37	4,39	4,41
Cooling energy class			B	B	B	B	B	B
ENERGY EFFICIENCY								
SEASONAL EFFICIENCY IN COOLING (Reg. EU 2016/2281)								
Ambient refrigeration								
Prated,c	(11)	kW	-	-	-	-	-	-
SEER	(11)(12)		-	-	-	-	-	-
Performance ηs	(11)(13)	%	-	-	-	-	-	-
SEASONAL EFFICIENCY IN HEATING (Reg. EU 813/2013)								
PDesign	(4)	kW	65,1	77,4	87,9	101	113	129
SCOP	(4)(14)		5,52	5,52	5,66	5,66	5,75	5,66
Performance ηs	(4)(15)	%	213	213	218	218	222	219
Seasonal efficiency class	(4)		A++	-	-	-	-	-
PDesign	(5)	kW	60,1	72,0	80,8	93,4	104	119
SCOP	(5)(14)		4,54	4,59	4,66	4,66	4,73	4,70
Performance ηs	(5)(15)	%	174	175	178	179	181	180
Seasonal efficiency class	(5)		A++	-	-	-	-	-
EXCHANGERS								
HEAT EXCHANGER USER SIDE IN REFRIGERATION								
Water flow	(1)	l/s	2,26	2,68	3,06	3,50	3,95	4,51
Pressure drop	(1)	kPa	18,7	16,0	17,5	17,8	18,8	19,3
HEAT EXCHANGER USER SIDE IN HEATING								
Water flow	(3)	l/s	3,45	4,14	4,68	5,39	6,05	6,92
Pressure drop	(3)	kPa	43,8	38,2	41,1	42,4	44,2	45,6
HEAT EXCHANGER SOURCE SIDE IN REFRIGERATION								
Water flow	(1)	l/s	2,74	3,26	3,70	4,23	4,75	5,45
Pressure drop	(1)	kPa	17,9	21,2	29,8	30,3	31,6	32,6
HEAT EXCHANGER SOURCE SIDE IN HEATING								
Water flow	(3)	l/s	2,65	3,17	3,57	4,12	4,61	5,27
Pressure drop	(3)	kPa	16,8	20,1	27,9	28,6	29,7	30,6
REFRIGERANT CIRCUIT								
Compressors nr.		N°	2	2	2	2	2	2
No. Circuits		N°	1	1	1	1	1	1
Refrigerant charge		kg	5,80	5,70	6,70	7,80	8,70	10,0
NOISE LEVEL								
Sound Pressure	(6)	dB(A)	56	56	57	57	58	58
Sound power level in cooling	(7)(8)	dB(A)	71	71	72	72	73	73
Sound power level in heating	(7)(9)	dB(A)	71	71	72	72	73	73
SIZE AND WEIGHT								
A	(10)	mm	1470	1470	1470	1470	1470	1470
B	(10)	mm	885	885	885	885	885	885
H	(10)	mm	900	900	900	900	900	900
Operating weight	(10)	kg	405	435	445	465	475	495

Notes:
1 Plant (side) cooling exchanger water (in/out) 12°C/7°C; Source (side) heat exchanger water (in/out) 30°C/35°C.
2 Values in compliance with EN14511-3:2013.
3 Plant (side) heating exchanger water (in/out) 40°C/45°C; Source (side) heat exchanger water (in/out) 10°C/7°C
4 Seasonal space heating energy efficiency class LOW TEMPERATURE in AVERAGE climate conditions [REGULATION (EU) N. 813/2013]
5 Seasonal space heating energy efficiency class MEDIA TEMPERATURE in AVERAGE climate conditions [REGULATION (EU) N. 813/2013]
6 Average sound pressure level at 1m distance, unit in a free field on a reflective surface; non-binding value calculated from the sound power level.
7 Sound power on the basis of measurements made in compliance with ISO 9614.
8 Sound power level in cooling, indoors.
9 Sound power level in heating, indoors.
10 Unit in standard configuration/execution, without optional accessories.
11 Seasonal energy efficiency of the cooling environment [REGULATION (EU) N. 2016/2281]
12 Seasonal space heating energy index
13 Seasonal energy efficiency of the space cooling
14 Seasonal performance coefficient
15 Seasonal space heating energy efficiency
The units highlighted in this publication contain HFC R410A [GWP_{100} 2088] fluorinated greenhouse gases.
Certified data in EUROVENT

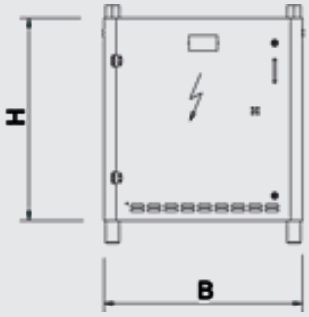
H
B

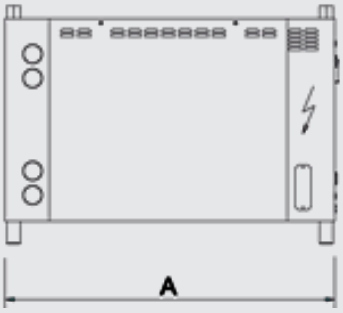
A

HEAT PUMPS

NX-W /H 0122 - 1204

Water to water heat pump, reversible on hydraulic side 38,1-398 kW



Water to water indoor unit for the production of chilled/hot water with hermetic rotary Scroll compressors, braze-welded plate-type exchanger and electronic expansion valve. Basement and frame in hot-galvanised shaped sheet steel with a suitable thickness. All parts polyester-powder painted to assure total weather resistance, RAL 7035.
The range includes the single-circuit two-compressor versions and the dual circuit four-compressor versions.

Version

-	Basic

Configurations

H	Function with heat pump, reversible on hydraulic side

Features

HIGH EFFICIENCY

Very high efficiency at full and partial load, at the highest market levels, thanks to the adopted technological solutions. These units ensure low operating costs and therefore a quick payback time.

ErP READY

The highest level of efficiency at part load can meet and exceed the minimum seasonal efficiency for heating, SCOP (only for reversible units) and for cooling, SEER, according with the eco-sustainable design requirements for all products using energy. The units already comply with the minimum seasonal energy efficiency requirements that will start from 2021.

VARIBLE PRIMARY FLOW (OPTION)

Energy saving due to variable pump speed management based on load demand and the variable flow assures the functioning of the units also with critical working conditions. VPF (Variable Primary Flow) available for sizes 0604-1204.

EXTREMELY SILENT OPERATION

Extremely silent operation together with high efficiency, tank to dedicated acoustic devices and a precise design for the choice of the components.

INTEGRATED CONDENSATION´S CONTROL

The electronics of the units manages the most suitable condensing control for each type of application: two or three-way modulating valve and 0-10V signal for variable speed driven pumps.

TOTAL VERSATILITY

Climaveneta has designed the NX-W units with a range of integral accessories in mind for operation with total water loss (well, water bed, etc.), dry cooler or cooling tower and suitable for geothermal application so as to satisfy all service system and installation requirements.

ELECTRONIC EXPANSION VALVE SUPPLIED STANDARD

The use of the electronic expansion valve generates considerable benefits, especially in cases of variable demand and at different working conditions. It guaranteed energy saving due to efficiency optimization in various different working conditions. The electronic thermostatic valve allows you to obtain speed in reaching machine stability and an extension of the operating limits.

Accessory

- Touch Screen visual display
- Set-up for remote connectivity with ModBus/Echelon protocol cards
- Outside air temperature probe for plant water set point compensation.
- Integral acoustical enclosure (type base)
- Thicker soundproofing cladding
- VPF (Variable Primary Flow) system
- Condensing control device: two or three-way modulating pressure-controlled valve and inverter on pumps

Controls

Electronic control W3000TE

The brand new W3000TE controller offers advanced functions and algorithms.
The keypad W3000 Compact, as standard equipment, features function controls and a complete LCD display for viewing data and activating the unit, via a multilevel menu, with settable display language.
The controller provides water temperature control for the heating systems, cooling systems (only for reversible units), as well as for domestic hot water (only for reversible units). These different temperatures are managed automatically based on the different conditions in which the system operates, with the possibility to assign specific levels of priority to domestic hot water production, depending on the needs of the application.
The regulation is based on the exclusive QuickMind algorithm, including self-adaptive control logics, beneficial in low water content systems. As alternatives the proportional- or proportional- integral regulations are also available.
Diagnostics include complete alarm management, with “blackbox” functions (via PC) and alarm log (display or PC) for best analysis of unit be haviour. For systems made up of multiple units, differentiated device management means just a certain portion of the capacity installed can be dedicated to domestic water production, in this way ensuring more efficient energy distribution and, at the same time, guaranteeing simultaneous water delivery to the different distribution systems. The built-in clock can be used to create an operating profile containing up to 4 typical days and 10 time bands, essential for efficient programming of energy production and fundamental for managing the Legionella prevention cycles. Available time bands also for DHW production.
Supervision is available with different options, using proprietary devices or by integration into third party systems using ModBus, BACnet, BACnet-over-IP and Echelon LonWorks protocols.
A dedicated wall-mounted keypad can be used for remote control of all the functions.
Optionally (VPF package), capacity modulation can be integrated with hydraulic flow modulation, thanks to inverter-driven pumps and to specific resources for the hydraulic circuit.



NX-W /H			0122	0152	0182	0202	0252	0262	0302	0352
Power supply		V/ph/Hz	400/3/50	400/3/50	400/3/50	400/3/50	400/3/50	400/3/50	400/3/50	400/3/50
PERFORMANCE										
COOLING ONLY (GROSS VALUE)										
Cooling capacity	(1)	kW	38,1	47,7	56,2	65,3	72,3	82,3	96,7	111
Total power input	(1)	kW	7,53	9,31	10,8	12,6	13,8	16,0	18,9	21,7
EER	(1)	kW/kW	5,06	5,12	5,20	5,18	5,24	5,14	5,12	5,13
ESEER	(1)	kW/kW	6,46	6,76	6,42	6,47	6,72	6,41	6,49	6,63
COOLING ONLY (EN14511 VALUE)										
Cooling capacity	(1)(2)	kW	37,9	47,5	55,9	65,1	72,0	82,0	96,4	111
EER	(1)(2)	kW/kW	4,85	4,89	4,96	4,96	5,01	4,96	4,94	4,96
ESEER	(1)(2)	kW/kW	5,89	6,10	5,81	5,93	6,12	5,95	6,04	6,13
Cooling energy class			B	B	B	B	B	B	B	B
HEATING ONLY (GROSS VALUE)										
Total heating capacity	(3)	kW	42,4	53,0	62,6	72,6	80,1	91,0	107	123
Total power input	(3)	kW	9,44	11,5	13,3	15,6	17,2	19,6	23,1	26,5
COP		kW/kW	4,49	4,61	4,71	4,65	4,66	4,64	4,64	4,65
HEATING ONLY (EN14511 VALUE)										
Total heating capacity	(3)(2)	kW	42,5	53,2	62,8	72,8	80,4	91,2	107	123
COP	(3)(2)	kW/kW	4,28	4,37	4,46	4,45	4,45	4,46	4,46	4,47
Cooling energy class			B	B	A	A	A	A	A	A
ENERGY EFFICIENCY										
SEASONAL EFFICIENCY IN COOLING (Reg. EU 2016/2281)										
Ambient refrigeration										
Prated,c	(11)	kW	-	-	-	-	-	-	-	-
SEER	(11)(12)		-	-	-	-	-	-	-	-
Performance ηs	(11)(13)	%	-	-	-	-	-	-	-	-
SEASONAL EFFICIENCY IN HEATING (Reg. EU 813/2013)										
PDesign	(4)	kW	51,0	63,7	75,5	87,2	96,9	110	129	149
SCOP	(4)(14)		5,89	5,99	5,87	6,02	6,14	6,07	6,09	6,16
Performance ηs	(4)(15)	%	228	232	227	233	238	235	236	238
Seasonal efficiency class	(4)		A++	A++	A++	-	-	-	-	-
PDesign	(5)	kW	46,1	57,5	67,8	79,1	86,9	98,5	116	133
SCOP	(5)(14)		4,62	4,68	4,73	4,78	4,80	4,79	4,80	4,85
Performance ηs	(5)(15)	%	177	179	181	183	184	184	184	186
Seasonal efficiency class	(5)		A++	A++	A++	-	-	-	-	-
EXCHANGERS										
HEAT EXCHANGER USER SIDE IN REFRIGERATION										
Water flow	(1)	l/s	1,82	2,28	2,69	3,12	3,46	3,94	4,62	5,33
Pressure drop	(1)	kPa	21,6	26,6	26,7	21,8	21,6	21,8	22,7	22,9
HEAT EXCHANGER USER SIDE IN HEATING										
Water flow	(3)	l/s	2,67	3,35	3,99	4,62	5,09	5,78	6,81	7,82
Pressure drop	(3)	kPa	46,4	57,4	59,0	47,8	46,9	47,1	49,3	49,4
HEAT EXCHANGER SOURCE SIDE IN REFRIGERATION										
Water flow	(1)	l/s	2,18	2,72	3,19	3,71	4,11	4,68	5,50	6,34
Pressure drop	(1)	kPa	11,8	15,7	18,1	20,6	23,1	13,5	14,2	14,6
HEAT EXCHANGER SOURCE SIDE IN HEATING										
Water flow	(3)	l/s	2,05	2,56	3,02	3,50	3,87	4,39	5,17	5,94
Pressure drop	(3)	kPa	10,4	13,9	16,2	18,3	20,5	11,9	12,5	12,8
REFRIGERANT CIRCUIT										
Compressors nr.		N°	2	2	2	2	2	2	2	2
No. Circuits		N°	1	1	1	1	1	1	1	1
Refrigerant charge		kg	3,80	4,20	5,00	5,50	6,10	8,60	10,0	11,6
NOISE LEVEL										
Sound Pressure	(6)	dB(A)	57	57	58	58	58	59	60	60
Sound power level in cooling	(7)(8)	dB(A)	73	73	74	74	74	75	76	77
Sound power level in heating	(7)(9)	dB(A)	74	74	75	75	75	76	77	78
SIZE AND WEIGHT										
A	(10)	mm	1225	1225	1225	1225	1225	1225	1225	1570
B	(10)	mm	885	885	885	885	885	885	885	885
H	(10)	mm	1495	1495	1495	1495	1495	1495	1495	1805
Operating weight	(10)	kg	360	360	390	410	440	480	520	660

Notes:
1 Plant (side) cooling exchanger water (in/out) 12°C/7°C; Source (side) heat exchanger water (in/out) 30°C/35°C.
2 Values in compliance with EN14511-3:2013.
3 Plant (side) heating exchanger water (in/out) 40°C/45°C; Source (side) heat exchanger water (in/out) 10°C/7°C
4 Seasonal space heating energy efficiency class LOW TEMPERATURE in AVERAGE climate conditions [REGULATION (EU) N. 813/2013]
5 Seasonal space heating energy efficiency class MEDIA TEMPERATURE in AVERAGE climate conditions [REGULATION (EU) N. 813/2013]
6 Average sound pressure level at 1m distance, unit in a free field on a reflective surface; non-binding value calculated from the sound power level.
7 Sound power on the basis of measurements made in compliance with ISO 9614.
8 Sound power level in cooling, indoors.
9 Sound power level in heating, indoors.
10 Unit in standard configuration/execution, without optional accessories.
11 Seasonal energy efficiency of the cooling environment [REGULATION (EU) N. 2016/2281]
12 Seasonal space heating energy index
13 Seasonal energy efficiency of the space cooling
14 Seasonal performance coefficient
15 Seasonal space heating energy efficiency
The units highlighted in this publication contain HFC R410A [GWP_{100} 2088] fluorinated greenhouse gases.

NX-W /H			0402	0452	0502	0552	0602	0702	0802	0604
Power supply		V/ph/Hz	400/3/50	400/3/50	400/3/50	400/3/50	400/3/50	400/3/50	400/3/50	400/3/50
PERFORMANCE										
COOLING ONLY (GROSS VALUE)										
Cooling capacity	(1)	kW	126	142	157	181	204	231	254	192
Total power input	(1)	kW	24,5	27,7	30,9	35,2	39,6	45,2	51,2	38,3
EER	(1)	kW/kW	5,15	5,12	5,10	5,14	5,16	5,10	4,97	5,01
ESEER	(1)	kW/kW	6,34	6,47	6,32	6,42	6,42	6,50	6,06	6,60
COOLING ONLY (EN14511 VALUE)										
Cooling capacity	(1)(2)	kW	126	141	157	181	204	230	253	191
EER	(1)(2)	kW/kW	4,98	4,96	4,93	4,98	5,00	4,93	4,79	4,88
ESEER	(1)(2)	kW/kW	5,95	6,04	5,92	6,00	6,01	6,03	5,63	6,14
Cooling energy class			B	B	B	B	B	B	B	B
HEATING ONLY (GROSS VALUE)										
Total heating capacity	(3)	kW	139	157	175	200	226	255	283	212
Total power input	(3)	kW	29,9	33,9	37,8	43,0	48,3	54,6	61,5	46,9
COP		kW/kW	4,65	4,63	4,62	4,66	4,67	4,68	4,61	4,51
HEATING ONLY (EN14511 VALUE)										
Total heating capacity	(3)(2)	kW	139	157	175	201	226	256	284	212
COP	(3)(2)	kW/kW	4,48	4,47	4,46	4,49	4,51	4,49	4,40	4,40
Cooling energy class			A	A	A	A	A	A	B	B
ENERGY EFFICIENCY										
SEASONAL EFFICIENCY IN COOLING (Reg. EU 2016/2281)										
Ambient refrigeration										
Prated,c	(11)	kW	-	-	-	-	-	-	-	-
SEER	(11)(12)		-	-	-	-	-	-	-	-
Performance ηs	(11)(13)	%	-	-	-	-	-	-	-	-
SEASONAL EFFICIENCY IN HEATING (Reg. EU 813/2013)										
PDesign	(4)	kW	169	190	211	242	273	308	339	255
SCOP	(4)(14)		6,07	6,10	6,01	6,10	6,11	6,07	5,82	6,18
Performance ηs	(4)(15)	%	235	236	232	236	236	235	225	239
Seasonal efficiency class	(4)		-	-	-	-	-	-	-	-
PDesign	(5)	kW	150	170	189	217	244	277	308	229
SCOP	(5)(14)		4,81	4,85	4,80	4,87	4,86	4,90	4,72	4,81
Performance ηs	(5)(15)	%	184	186	184	187	186	188	181	184
Seasonal efficiency class	(5)		-	-	-	-	-	-	-	-
EXCHANGERS										
HEAT EXCHANGER USER SIDE IN REFRIGERATION										
Water flow	(1)	l/s	6,03	6,78	7,53	8,66	9,78	11,02	12,16	9,17
Pressure drop	(1)	kPa	23,1	23,8	24,4	24,9	25,5	30,7	37,4	17,1
HEAT EXCHANGER USER SIDE IN HEATING										
Water flow	(3)	l/s	8,83	9,96	11,09	12,73	14,36	16,25	17,97	13,36
Pressure drop	(3)	kPa	49,6	51,4	52,9	53,8	55,1	66,7	81,6	36,3
HEAT EXCHANGER SOURCE SIDE IN REFRIGERATION										
Water flow	(1)	l/s	7,17	8,07	8,97	10,30	11,63	13,14	14,55	10,96
Pressure drop	(1)	kPa	15,4	15,9	18,5	18,3	21,0	23,5	28,8	16,2
HEAT EXCHANGER SOURCE SIDE IN HEATING										
Water flow	(3)	l/s	6,71	7,57	8,43	9,67	10,90	12,32	13,68	10,22
Pressure drop	(3)	kPa	13,5	14,0	16,3	16,1	18,5	20,7	25,4	14,1
REFRIGERANT CIRCUIT										
Compressors nr.		N°	2	2	2	2	2	2	2	4
No. Circuits		N°	1	1	1	1	1	1	1	2
Refrigerant charge		kg	13,1	14,8	15,7	18,8	21,4	22,4	22,4	19,3
NOISE LEVEL										
Sound Pressure	(6)	dB(A)	60	61	61	62	62	65	66	69
Sound power level in cooling	(7)(8)	dB(A)	77	78	78	79	79	82	83	86
Sound power level in heating	(7)(9)	dB(A)	78	79	79	80	80	83	84	87
SIZE AND WEIGHT										
A	(10)	mm	1570	1570	1570	1570	1570	1570	1570	2210
B	(10)	mm	885	885	885	885	885	885	885	885
H	(10)	mm	1805	1805	1805	1805	1805	1805	1805	1805
Operating weight	(10)	kg	740	790	820	870	920	940	960	870

Notes:
1 Plant (side) cooling exchanger water (in/out) 12°C/7°C; Source (side) heat exchanger water (in/out) 30°C/35°C.
2 Values in compliance with EN14511-3:2013.
3 Plant (side) heating exchanger water (in/out) 40°C/45°C; Source (side) heat exchanger water (in/out) 10°C/7°C
4 Seasonal space heating energy efficiency class LOW TEMPERATURE in AVERAGE climate conditions [REGULATION (EU) N. 813/2013]
5 Seasonal space heating energy efficiency class MEDIA TEMPERATURE in AVERAGE climate conditions [REGULATION (EU) N. 813/2013]
6 Average sound pressure level at 1m distance, unit in a free field on a reflective surface; non-binding value calculated from the sound power level.
7 Sound power on the basis of measurements made in compliance with ISO 9614.
8 Sound power level in cooling, indoors.
9 Sound power level in heating, indoors.
10 Unit in standard configuration/execution, without optional accessories.
11 Seasonal energy efficiency of the cooling environment [REGULATION (EU) N. 2016/2281]
12 Seasonal space heating energy index
13 Seasonal energy efficiency of the space cooling
14 Seasonal performance coefficient
15 Seasonal space heating energy efficiency
The units highlighted in this publication contain HFC R410A [GWP_{100} 2088] fluorinated greenhouse gases.

NX-W /H			0704	0804	0904	1004	1104	1204
Power supply		V/ph/Hz	400/3/50	400/3/50	400/3/50	400/3/50	400/3/50	400/3/50
PERFORMANCE								
COOLING ONLY (GROSS VALUE)								
Cooling capacity	(1)	kW	221	250	281	313	359	398
Total power input	(1)	kW	43,9	49,6	56,1	62,5	71,3	80,0
EER	(1)	kW/kW	5,03	5,04	5,01	5,00	5,04	4,98
ESEER	(1)	kW/kW	6,64	6,58	6,64	6,53	6,61	6,57
COOLING ONLY (EN14511 VALUE)								
Cooling capacity	(1)(2)	kW	220	249	281	312	358	397
EER	(1)(2)	kW/kW	4,91	4,91	4,88	4,86	4,89	4,81
ESEER	(1)(2)	kW/kW	6,16	6,12	6,13	6,02	6,03	5,96
Cooling energy class			B	B	B	B	B	B
HEATING ONLY (GROSS VALUE)								
Total heating capacity	(3)	kW	243	274	309	345	396	440
Total power input	(3)	kW	53,8	60,6	68,2	76,5	87,1	98,1
COP		kW/kW	4,52	4,53	4,54	4,51	4,54	4,49
HEATING ONLY (EN14511 VALUE)								
Total heating capacity	(3)(2)	kW	244	275	310	346	396	442
COP	(3)(2)	kW/kW	4,40	4,41	4,41	4,37	4,38	4,31
Cooling energy class			B	B	B	B	B	B
ENERGY EFFICIENCY								
SEASONAL EFFICIENCY IN COOLING (Reg. EU 2016/2281)								
Ambient refrigeration								
Prated,c	(11)	kW	-	-	-	-	358	397
SEER	(11)(12)		-	-	-	-	5,89	5,79
Performance ηs	(11)(13)	%	-	-	-	-	228	224
SEASONAL EFFICIENCY IN HEATING (Reg. EU 813/2013)								
PDesign	(4)	kW	294	332	371	416	-	-
SCOP	(4)(14)		6,17	6,17	6,27	6,05	-	-
Performance ηs	(4)(15)	%	239	239	243	234	-	-
Seasonal efficiency class	(4)		-	-	-	-	-	-
PDesign	(5)	kW	263	297	335	374		
SCOP	(5)(14)		4,83	4,90	4,93	4,85		
Performance ηs	(5)(15)	%	185	188	189	186		
Seasonal efficiency class	(5)		-	-	-	-	-	-
EXCHANGERS								
HEAT EXCHANGER USER SIDE IN REFRIGERATION								
Water flow	(1)	l/s	10,57	11,96	13,45	14,95	17,18	19,05
Pressure drop	(1)	kPa	18,1	20,0	21,3	24,9	28,2	34,7
HEAT EXCHANGER USER SIDE IN HEATING								
Water flow	(3)	l/s	15,34	17,33	19,54	21,77	24,99	27,73
Pressure drop	(3)	kPa	38,1	42,0	45,0	52,7	59,7	73,6
HEAT EXCHANGER SOURCE SIDE IN REFRIGERATION								
Water flow	(1)	l/s	12,62	14,27	16,07	17,87	20,51	22,78
Pressure drop	(1)	kPa	17,4	19,6	22,0	24,8	30,0	36,2
HEAT EXCHANGER SOURCE SIDE IN HEATING								
Water flow	(3)	l/s	11,73	13,25	14,93	16,66	19,09	21,25
Pressure drop	(3)	kPa	15,1	16,9	19,0	21,6	26,0	31,5
REFRIGERANT CIRCUIT								
Compressors nr.		N°	4	4	4	4	4	4
No. Circuits		N°	2	2	2	2	2	2
Refrigerant charge		kg	22,5	25,3	28,8	41,1	47,0	49,0
NOISE LEVEL								
Sound Pressure	(6)	dB(A)	70	71	72	73	74	74
Sound power level in cooling	(7)(8)	dB(A)	87	88	89	90	91	91
Sound power level in heating	(7)(9)	dB(A)	88	89	90	91	92	92
SIZE AND WEIGHT								
A	(10)	mm	2210	2650	2650	2650	2650	2650
B	(10)	mm	885	885	885	885	885	885
H	(10)	mm	1805	1805	1805	1805	1805	1805
Operating weight	(10)	kg	1050	1240	1330	1530	1630	1710

Notes:
1 Plant (side) cooling exchanger water (in/out) 12°C/7°C; Source (side) heat exchanger water (in/out) 30°C/35°C.
2 Values in compliance with EN14511-3:2013.
3 Plant (side) heating exchanger water (in/out) 40°C/45°C; Source (side) heat exchanger water (in/out) 10°C/7°C
4 Seasonal space heating energy efficiency class LOW TEMPERATURE in AVERAGE climate conditions [REGULATION (EU) N. 813/2013]
5 Seasonal space heating energy efficiency class MEDIA TEMPERATURE in AVERAGE climate conditions [REGULATION (EU) N. 813/2013]
6 Average sound pressure level at 1m distance, unit in a free field on a reflective surface; non-binding value calculated from the sound power level.
7 Sound power on the basis of measurements made in compliance with ISO 9614.
8 Sound power level in cooling, indoors.
9 Sound power level in heating, indoors.
10 Unit in standard configuration/execution, without optional accessories.
11 Seasonal energy efficiency of the cooling environment [REGULATION (EU) N. 2016/2281]
12 Seasonal space heating energy index
13 Seasonal energy efficiency of the space cooling
14 Seasonal performance coefficient
15 Seasonal space heating energy efficiency
The units highlighted in this publication contain HFC R410A [GWP_{100} 2088] fluorinated greenhouse gases.
Certified data in EUROVENT

Size 0122-802

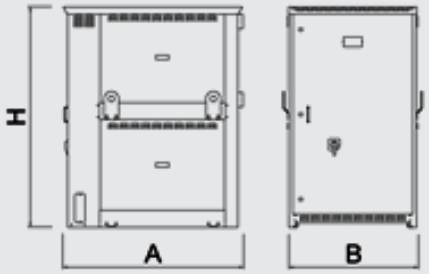

Size 0604-1204

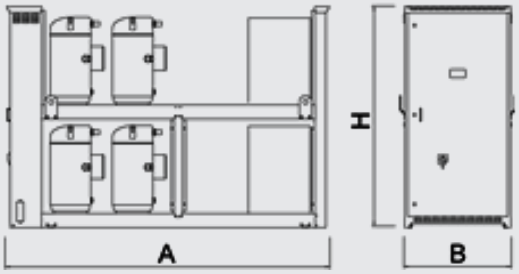

HEAT PUMPS

FOCS-W /H 0401 - 1302

Water to water heat pump, reversible on hydraulic side 87,0-298 kW



Indoor unit for the production of chilled/hot water with semi-hermetic screw compressors optimized for R134a, thermostatic expansion valve, shell and tube condenser and evaporator.
Base and supporting structure and panels are of galvanized epoxy powder coated steel with increased thickness.
Flexible and reliable unit; it easily adapts itself to different thermal load conditions thanks to the precise thermoregulation. The high performance's level is achieved thanks to the accurate sizing of all internal components.

Version

B	Basic

Configurations

H	Function with heat pump, reversible on hydraulic side

Features

FLEXIBILITY
Flexibility in applications thanks to the many available functions and versions
ADAPTABILITY
Adaptability at the building's cooling request thanks to the continuous capacity regulation, assured by sophisticated control's logic.

Accessory

- Compressor power factor correction
- Electronic expansion valve
- Pressostatic control valve
- Remote control keyboard (distance to 200m and to 500m)
- Set-up for remote connectivity with ModBus, Echelon LonTalk, Bacnet protocol board

Controls

W3000TE
The brand new W3000TE controller offers advanced functions and algorithms. The large format keyboard and the wide LCD display favour an easy and safe access to the machine setup and a complete view of unit's staus. The assessment and intervention on the unit is managed through a multi-level menu, with selectable user's language. The led icons immediately show the operating status of the circuits, as well as of the fans and of the water pumps (if present). An optional extra is the touch screen interface: 7.0" WVGA colour display with adjustable LED backlight and front USB port. The touch screen technology allows intuitive navigation between the various screens, safe access to the data with a three-level password protection as well as the graphic display of the performance of some monitored measurements.
The diagnostics comprises a complete alarm management system, with "black box" (via PC) and alarm log functions (via display or also PC) for a better analysis of the unit performance.
For the systems made of several units, the adjustment of the resources is performed by optional proprietary devices.
Consumption metering and performance measurement are possible as well. Supervision can be easily developed via proprietary devices or the integration in third party systems by means of the most common protocols as ModBus, Bacnet-over-IP, Echelon LonWorks, Bacnet MS/TP protocols.
Compatibility with the remote keyboard managing up to 8 units.
The presence of the programmable timer allows the creation of an operating profile containing up to 4 typical days and 10 time bands.
The control is characterized by the continuous modulation of the unit capacity, based on PID algorithms and referring to the water delivery temperature.
Optionally (VPF package), capacity modulation can be integrated with hydraulic flow modulation, thanks to inverter-driven pumps and to specific resources for the hydraulic circuit.



FOCS-W / B /H			0401	0501	0551	0651	0751	0802
Power supply		V/ph/Hz	400/3/50	400/3/50	400/3/50	400/3/50	400/3/50	400/3/50
PERFORMANCE								
COOLING ONLY (GROSS VALUE)								
Cooling capacity	(1)	kW	87,0	107	130	147	165	178
Total power input	(1)	kW	19,6	24,5	28,1	32,7	36,9	39,3
EER	(1)	kW/kW	4,44	4,35	4,63	4,51	4,46	4,52
ESEER	(1)	kW/kW	5,15	5,32	5,25	5,29	5,40	5,39
COOLING ONLY (EN14511 VALUE)								
Cooling capacity	(1)(2)	kW	86,7	106	130	147	164	177
EER	(1)(2)	kW/kW	4,27	4,17	4,46	4,34	4,29	4,35
ESEER	(1)(2)	kW/kW	4,49	4,33	4,93	4,53	4,46	4,56
Cooling energy class			C	D	G	C	C	C
HEATING ONLY (GROSS VALUE)								
Total heating capacity	(3)	kW	99,5	123	148	168	189	202
Total power input	(3)	kW	23,5	29,2	34,2	39,2	44,0	47,1
COP		kW/kW	4,23	4,20	4,32	4,29	4,29	4,29
HEATING ONLY (EN14511 VALUE)								
Total heating capacity	(3)(2)	kW	99,9	123	148	169	189	203
COP	(3)(2)	kW/kW	4,08	4,04	4,18	4,14	4,13	4,15
Cooling energy class			C	C	G	C	C	C
ENERGY EFFICIENCY								
SEASONAL EFFICIENCY IN COOLING (Reg. EU 2016/2281)								
Ambient refrigeration								
Prated,c	(11)	kW	-	-	-	-	-	-
SEER	(11)(12)		-	-	-	-	-	-
Performance ηs	(11)(13)	%	-	-	-	-	-	-
SEASONAL EFFICIENCY IN HEATING (Reg. EU 813/2013)								
PDesign	(4)	kW	120	148	179	203	227	245
SCOP	(4)(14)		5,33	5,41	5,53	5,46	5,50	5,48
Performance ηs	(4)(15)	%	205	208	213	210	212	211
Seasonal efficiency class	(4)		-	-	-	-	-	-
PDesign	(5)	kW	107	133	159	180	204	217
SCOP	(5)(14)		4,01	4,23	3,93	4,07	4,26	4,18
Performance ηs	(5)(15)	%	152	161	149	155	162	159
Seasonal efficiency class	(5)		-	-	-	-	-	-
EXCHANGERS								
HEAT EXCHANGER USER SIDE IN REFRIGERATION								
Water flow	(1)	l/s	4,16	5,10	6,23	7,05	7,87	8,49
Pressure drop	(1)	kPa	17,7	17,5	14,1	18,1	22,6	17,6
HEAT EXCHANGER USER SIDE IN HEATING								
Water flow	(3)	l/s	6,17	7,59	9,20	10,45	11,73	12,58
Pressure drop	(3)	kPa	39,0	38,8	30,9	39,7	50,1	38,6
HEAT EXCHANGER SOURCE SIDE IN REFRIGERATION								
Water flow	(1)	l/s	5,07	6,24	7,54	8,57	9,59	10,32
Pressure drop	(1)	kPa	32,6	52,5	43,1	44,0	44,7	51,8
HEAT EXCHANGER SOURCE SIDE IN HEATING								
Water flow	(3)	l/s	4,80	5,92	7,13	8,11	9,10	9,76
Pressure drop	(3)	kPa	29,3	47,3	38,6	39,4	40,3	46,3
REFRIGERANT CIRCUIT								
Compressors nr.		N°	1	1	1	1	1	2
No. Circuits		N°	1	1	0	1	1	2
Refrigerant charge		kg	18,5	21,0	31,0	29,9	28,9	41,9
NOISE LEVEL								
Sound Pressure	(6)	dB(A)	74	75	77	77	77	76
Sound power level in cooling	(7)(8)	dB(A)	91	92	94	94	94	94
Sound power level in heating	(7)(9)	dB(A)	91	92	94	94	94	94
SIZE AND WEIGHT								
A	(10)	mm	2300	2500	2500	2500	2500	3200
B	(10)	mm	1000	1000	1000	1000	1000	1200
H	(10)	mm	1500	1500	1500	1500	1500	1500
Operating weight	(10)	kg	800	840	1160	1180	1190	1470

Notes:
1 Plant (side) cooling exchanger water (in/out) 12°C/7°C; Source (side) heat exchanger water (in/out) 30°C/35°C.
2 Values in compliance with EN14511-3:2013.
3 Plant (side) heating exchanger water (in/out) 40°C/45°C; Source (side) heat exchanger water (in/out) 10°C/7°C
4 Seasonal space heating energy efficiency class LOW TEMPERATURE in AVERAGE climate conditions [REGULATION (EU) N. 813/2013]
5 Seasonal space heating energy efficiency class MEDIA TEMPERATURE in AVERAGE climate conditions [REGULATION (EU) N. 813/2013]
6 Average sound pressure level at 1m distance, unit in a free field on a reflective surface; non-binding value calculated from the sound power level.
7 Sound power on the basis of measurements made in compliance with ISO 9614.
8 Sound power level in cooling, indoors.
9 Sound power level in heating, indoors.
10 Unit in standard configuration/execution, without optional accessories.
11 Seasonal energy efficiency of the cooling environment [REGULATION (EU) N. 2016/2281]
12 Seasonal space heating energy index
13 Seasonal energy efficiency of the space cooling
14 Seasonal performance coefficient
15 Seasonal space heating energy efficiency
The units highlighted in this publication contain HFC R134a [GWP_{100} 1430] fluorinated greenhouse gases.

FOCS-W / B /H			0851	0951	1002	1102	1302
Power supply		V/ph/Hz	400/3/50	400/3/50	400/3/50	400/3/50	400/3/50
PERFORMANCE							
COOLING ONLY (GROSS VALUE)							
Cooling capacity	(1)	kW	198	221	217	251	298
Total power input	(1)	kW	42,7	49,6	49,2	55,8	65,6
EER	(1)	kW/kW	4,63	4,46	4,41	4,49	4,54
ESEER	(1)	kW/kW	5,54	5,42	5,52	5,24	5,49
COOLING ONLY (EN14511 VALUE)							
Cooling capacity	(1)(2)	kW	197	220	216	250	297
EER	(1)(2)	kW/kW	4,45	4,28	4,22	4,30	4,35
ESEER	(1)(2)	kW/kW	4,66	4,45	4,38	4,53	4,56
Cooling energy class			C	C	D	C	C
HEATING ONLY (GROSS VALUE)							
Total heating capacity	(3)	kW	223	252	249	287	339
Total power input	(3)	kW	51,2	59,1	58,7	67,9	78,6
COP		kW/kW	4,36	4,27	4,24	4,22	4,31
HEATING ONLY (EN14511 VALUE)							
Total heating capacity	(3)(2)	kW	224	253	250	288	340
COP	(3)(2)	kW/kW	4,21	4,07	4,03	4,00	4,10
Cooling energy class			C	C	C	C	C
ENERGY EFFICIENCY							
SEASONAL EFFICIENCY IN COOLING (Reg. EU 2016/2281)							
Ambient refrigeration							
Prated,c	(11)	kW	-	-	-	-	-
SEER	(11)(12)		-	-	-	-	-
Performance ηs	(11)(13)	%	-	-	-	-	-
SEASONAL EFFICIENCY IN HEATING (Reg. EU 813/2013)							
PDesign	(4)	kW	272	305	300	346	410
SCOP	(4)(14)		5,64	5,36	5,26	5,02	5,22
Performance ηs	(4)(15)	%	218	206	202	193	201
Seasonal efficiency class	(4)		-	-	-	-	-
PDesign	(5)	kW	239	272	269	311	363
SCOP	(5)(14)		4,24	4,25	4,27	3,83	4,11
Performance ηs	(5)(15)	%	161	162	163	145	156
Seasonal efficiency class	(5)		-	-	-	-	-
EXCHANGERS							
HEAT EXCHANGER USER SIDE IN REFRIGERATION							
Water flow	(1)	l/s	9,46	10,57	10,38	11,99	14,25
Pressure drop	(1)	kPa	21,8	41,3	39,8	53,1	46,0
HEAT EXCHANGER USER SIDE IN HEATING							
Water flow	(3)	l/s	13,96	15,68	15,42	17,77	21,11
Pressure drop	(3)	kPa	47,5	90,8	87,8	117	101
HEAT EXCHANGER SOURCE SIDE IN REFRIGERATION							
Water flow	(1)	l/s	11,45	12,88	12,67	14,59	17,30
Pressure drop	(1)	kPa	52,5	38,7	54,1	40,5	45,0
HEAT EXCHANGER SOURCE SIDE IN HEATING							
Water flow	(3)	l/s	10,78	12,18	12,00	13,84	16,35
Pressure drop	(3)	kPa	46,6	34,6	48,6	36,5	40,2
REFRIGERANT CIRCUIT							
Compressors nr.		N°	1	1	2	2	2
No. Circuits		N°	1	1	2	2	2
Refrigerant charge		kg	35,6	50,6	42,6	51,0	53,7
NOISE LEVEL							
Sound Pressure	(6)	dB(A)	76	76	77	79	79
Sound power level in cooling	(7)(8)	dB(A)	94	94	95	97	97
Sound power level in heating	(7)(9)	dB(A)	94	94	95	97	97
SIZE AND WEIGHT							
A	(10)	mm	3200	3200	3200	3200	3500
B	(10)	mm	1000	1000	1200	1200	1200
H	(10)	mm	1500	1500	1500	1500	1800
Operating weight	(10)	kg	1270	1350	1490	1930	2220

Notes:
1 Plant (side) cooling exchanger water (in/out) 12°C/7°C; Source (side) heat exchanger water (in/out) 30°C/35°C.
2 Values in compliance with EN14511-3:2013.
3 Plant (side) heating exchanger water (in/out) 40°C/45°C; Source (side) heat exchanger water (in/out) 10°C/7°C
4 Seasonal space heating energy efficiency class LOW TEMPERATURE in AVERAGE climate conditions [REGULATION (EU) N. 813/2013]
5 Seasonal space heating energy efficiency class MEDIA TEMPERATURE in AVERAGE climate conditions [REGULATION (EU) N. 813/2013]
6 Average sound pressure level at 1m distance, unit in a free field on a reflective surface; non-binding value calculated from the sound power level.
7 Sound power on the basis of measurements made in compliance with ISO 9614.
8 Sound power level in cooling, indoors.
9 Sound power level in heating, indoors.
10 Unit in standard configuration/execution, without optional accessories.
11 Seasonal energy efficiency of the cooling environment [REGULATION (EU) N. 2016/2281]
12 Seasonal space heating energy index
13 Seasonal energy efficiency of the space cooling
14 Seasonal performance coefficient
15 Seasonal space heating energy efficiency
The units highlighted in this publication contain HFC R134a [GWP_{100} 1430] fluorinated greenhouse gases.
Certified data in EUROVENT

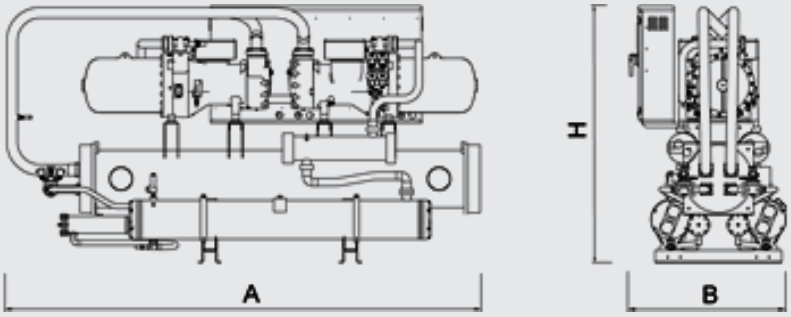
A
H
B

HEAT PUMPS

FOCS2-W /H 1301 - 9604

Water to water high efficiency heat pump, reversible on hydraulic side 306-2416 kW



Unit for indoor installation for chilled/hot water production. Semihermetic screw compressors optimized to operate with low compression ratio and R134a; shell and tubes condenser and direct expansion evaporator; electronic expansion valve. Frame in polyester-painted galvanized steel. High efficiency unit: the innovative optimized compressors and the high performing heat exchangers enhance EER values up to 5,1 (CA version) and even up to 5,6 (CA-E version) at Eurovent standars conditions.

Version

CA	High efficiency version
CA-E	Premium efficiency version: Class A enhanced

Configurations

H	Function with heat pump, reversible on hydraulic side

Features

HIGH EFFICIENCY

The version ´CA-E´ is characterized by efficiency beyond the ´Class A´ for Eurovent. The technological choices adopted assure the minimization of operating costs and therefore a quick payback time.

ADAPTABILITY

Adaptability at the building's heating request thanks to the continuous capacity regulation, assured by sophisticated control's logic.

SILENT OPERATION

Extremely silent operation thanks to the accurate unit's design. Optional integral acoustic enclosure, reduces more the sound level beyond the best on market

Accessory

- Kit HWT, High Water Temperature, to produce hot water up to 60°C
- Integral acoustical enclosure (type base or plus)
- VPF (Variable Primary Flow) system
- Set-up for remote connectivity with ModBus/Echelon protocol cards

Controls

W3000TE

The brand new W3000TE controller offers advanced functions and algorithms. The large format keyboard and the wide LCD display favour an easy and safe access to the machine setup and a complete view of unit's staus. The assessment and intervention on the unit is managed through a multi-level menu, with selectable user's language. The led icons immediately show the operating status of the circuits, as well as of the fans and of the water pumps (if present). An optional extra is the touch screen interface: 7.0" WVGA colour display with adjustable LED backlight and front USB port. The touch screen technology allows intuitive navigation between the various screens, safe access to the data with a three-level password protection as well as the graphic display of the performance of some monitored measurements.

The diagnostics comprises a complete alarm management system, with "black box" (via PC) and alarm log functions (via display or also PC) for a better analysis of the unit performance.

For the systems made of several units, the adjustment of the resources is performed by optional proprietary devices.

Consumption metering and performance measurement are possible as well. Supervision can be easily developed via proprietary devices or the integration in third party systems by means of the most common protocols as ModBus, Bacnet-over-IP, Echelon LonWorks, Bacnet MS/TP protocols.

Compatibility with the remote keyboard managing up to 8 units.

The presence of the programmable timer allows the creation of an operating profile containing up to 4 typical days and 10 time bands.

The control is characterized by the continuous modulation of the unit capacity, based on PID algorithms and referring to the water delivery temperature.

Optionally (VPF package), capacity modulation can be integrated with hydraulic flow modulation, thanks to inverter-driven pumps and to specific resources for the hydraulic circuit.



FOCS2-W /CA / H			1301	1401	3202	3602	4202	4502	4802
Power supply		V/ph/Hz	400/3/50	400/3/50	400/3/50	400/3/50	400/3/50	400/3/50	400/3/50
PERFORMANCE									
COOLING ONLY (GROSS VALUE)									
Cooling capacity	(1)	kW	306	348	844	957	1071	1145	1213
Total power input	(1)	kW	60,5	68,7	167	189	212	226	240
EER	(1)	kW/kW	5,06	5,07	5,06	5,07	5,06	5,06	5,06
ESEER	(1)	kW/kW	5,94	5,95	5,87	6,14	6,08	6,23	6,17
COOLING ONLY (EN14511 VALUE)									
Cooling capacity	(1)(2)	kW	305	347	841	954	1069	1142	1210
EER	(1)(2)	kW/kW	4,86	4,87	4,89	4,90	4,92	4,91	4,90
ESEER	(1)(2)	kW/kW	5,45	5,45	5,41	5,63	5,67	5,78	5,70
Cooling energy class			B	B	B	B	B	B	B
HEATING ONLY (GROSS VALUE)									
Total heating capacity	(3)	kW	344	392	928	1068	1210	1284	1354
Total power input	(3)	kW	76,7	87,2	208	236	265	282	299
COP		kW/kW	4,48	4,49	4,46	4,52	4,57	4,55	4,53
HEATING ONLY (EN14511 VALUE)									
Total heating capacity	(3)(2)	kW	344	393	930	1071	1213	1287	1357
COP	(3)(2)	kW/kW	4,32	4,32	4,34	4,35	4,42	4,42	4,40
Cooling energy class			B	B	B	B	B	B	B
ENERGY EFFICIENCY									
SEASONAL EFFICIENCY IN COOLING (Reg. EU 2016/2281)									
Ambient refrigeration									
Prated,c	(10)	kW	305	347	841	954	1069	1142	1210
SEER	(10)(11)		5,55	5,58	5,88	5,89	5,89	5,97	5,90
Performance ηs	(10)(12)	%	214	215	227	228	228	231	228
SEASONAL EFFICIENCY IN HEATING (Reg. EU 813/2013)									
PDesign	(4)	kW	-	-	-	-	-	-	-
SCOP	(4)(13)		-	-	-	-	-	-	-
Performance ηs	(4)(14)	%	-	-	-	-	-	-	-
Seasonal efficiency class	(4)		-	-	-	-	-	-	-
EXCHANGERS									
HEAT EXCHANGER USER SIDE IN REFRIGERATION									
Water flow	(1)	l/s	14,64	16,66	40,35	45,78	51,23	54,74	58,02
Pressure drop	(1)	kPa	41,9	45,0	45,4	46,4	30,6	34,2	38,4
HEAT EXCHANGER USER SIDE IN HEATING									
Water flow	(3)	l/s	18,89	21,94	47,22	63,05	73,89	73,89	73,89
Pressure drop	(3)	kPa	69,8	78,0	62,1	88,1	63,7	62,3	62,3
HEAT EXCHANGER SOURCE SIDE IN REFRIGERATION									
Water flow	(1)	l/s	17,46	19,87	48,14	54,60	61,11	65,30	69,22
Pressure drop	(1)	kPa	35,9	35,0	34,8	34,8	34,4	35,4	36,0
HEAT EXCHANGER SOURCE SIDE IN HEATING									
Water flow	(3)	l/s	16,58	18,90	44,78	51,57	58,39	61,96	65,35
Pressure drop	(3)	kPa	32,4	31,7	30,1	31,0	31,4	31,8	32,1
REFRIGERANT CIRCUIT									
Compressors nr.		N°	1	1	2	2	2	2	2
No. Circuits		N°	1	1	2	2	2	2	2
Refrigerant charge		kg	42,0	43,0	126	130	130	125	140
NOISE LEVEL									
Sound Pressure	(5)	dB(A)	79	79	80	80	80	80	80
Sound power level in cooling	(6)(7)	dB(A)	97	97	99	99	99	99	99
Sound power level in heating	(6)(8)	dB(A)	0	0	0	0	0	0	0
SIZE AND WEIGHT									
A	(9)	mm	3830	3830	4750	4750	4750	4750	4750
B	(9)	mm	900	900	1150	1150	1150	1150	1150
H	(9)	mm	1700	1700	2050	2050	2200	2200	2200
Operating weight	(9)	kg	2050	2110	5110	5400	6070	6120	6180

Notes:
1 Plant (side) cooling exchanger water (in/out) 12°C/7°C; Source (side) heat exchanger water (in/out) 30°C/35°C.
2 Values in compliance with EN14511-3:2013.
3 Plant (side) heating exchanger water (in/out) 40°C/45°C; Source (side) heat exchanger water (in/out) 10°C/6,6°C
4 Seasonal space heating energy efficiency class LOW TEMPERATURE in AVERAGE climate conditions [REGULATION (EU) N. 813/2013]
5 Average sound pressure level at 1m distance, unit in a free field on a reflective surface; non-binding value calculated from the sound power level.
6 Sound power on the basis of measurements made in compliance with ISO 9614.
7 Sound power level in cooling, indoors.
8 Sound power level in heating, indoors.
9 Unit in standard configuration/execution, without optional accessories.
10 Seasonal energy efficiency of the cooling environment [REGULATION (EU) N. 2016/2281]
11 Seasonal space heating energy index
12 Seasonal energy efficiency of the space cooling
13 Seasonal performance coefficient
14 Seasonal space heating energy efficiency
The units highlighted in this publication contain HFC R134a [GWP_{100} 1430] fluorinated greenhouse gases.

FOCS2-W /CA / H			5402	6002	8103	9003	9004	9604
Power supply		V/ph/Hz	400/3/50	400/3/50	400/3/50	400/3/50	400/3/50	400/3/50
PERFORMANCE								
COOLING ONLY (GROSS VALUE)								
Cooling capacity	(1)	kW	1348	1490	2024	2236	2278	2416
Total power input	(1)	kW	267	295	400	442	451	478
EER	(1)	kW/kW	5,05	5,05	5,05	5,06	5,05	5,05
ESEER	(1)	kW/kW	6,00	6,09	6,09	6,14	6,23	6,17
COOLING ONLY (EN14511 VALUE)								
Cooling capacity	(1)(2)	kW	1344	1485	2018	2228	2273	2410
EER	(1)(2)	kW/kW	4,88	4,87	4,90	4,89	4,92	4,91
ESEER	(1)(2)	kW/kW	5,54	5,57	5,61	5,60	5,80	5,71
Cooling energy class			B	B	B	B	B	B
HEATING ONLY (GROSS VALUE)								
Total heating capacity	(3)	kW	1481	1620	2226	2434	2582	2739
Total power input	(3)	kW	330	363	495	544	564	599
COP		kW/kW	4,49	4,46	4,50	4,47	4,58	4,58
HEATING ONLY (EN14511 VALUE)								
Total heating capacity	(3)(2)	kW	1484	1624	2231	2439	2588	2745
COP	(3)(2)	kW/kW	4,38	4,36	4,39	4,37	4,43	4,42
Cooling energy class			B	B	B	B	B	B
ENERGY EFFICIENCY								
SEASONAL EFFICIENCY IN COOLING (Reg. EU 2016/2281)								
Ambient refrigeration								
Prated,c	(10)	kW	1344	1485	-	-	-	-
SEER	(10)(11)		5,89	5,88	-	-	-	-
Performance ηs	(10)(12)	%	228	227	-	-	-	-
SEASONAL EFFICIENCY IN HEATING (Reg. EU 813/2013)								
PDesign	(4)	kW	-	-	-	-	-	-
SCOP	(4)(13)		-	-	-	-	-	-
Performance ηs	(4)(14)	%	-	-	-	-	-	-
Seasonal efficiency class	(4)		-	-	-	-	-	-
EXCHANGERS								
HEAT EXCHANGER USER SIDE IN REFRIGERATION								
Water flow	(1)	l/s	64,47	71,27	96,81	106,91	108,94	115,54
Pressure drop	(1)	kPa	47,4	54,6	43,7	53,3	32,3	36,3
HEAT EXCHANGER USER SIDE IN HEATING								
Water flow	(3)	l/s	73,89	73,89	112,50	112,50	163,49	173,44
Pressure drop	(3)	kPa	62,3	58,7	59,0	59,0	72,7	81,9
HEAT EXCHANGER SOURCE SIDE IN REFRIGERATION								
Water flow	(1)	l/s	76,93	85,04	115,51	127,55	129,98	137,87
Pressure drop	(1)	kPa	34,5	36,6	34,6	35,8	35,0	37,0
HEAT EXCHANGER SOURCE SIDE IN HEATING								
Water flow	(3)	l/s	71,47	78,19	107,43	117,51	124,62	132,22
Pressure drop	(3)	kPa	29,8	30,9	29,9	30,4	32,2	34,0
REFRIGERANT CIRCUIT								
Compressors nr.		N°	2	2	3	3	4	4
No. Circuits		N°	2	2	3	3	4	4
Refrigerant charge		kg	164	180	269	261	267	260
NOISE LEVEL								
Sound Pressure	(5)	dB(A)	82	82	82	82	82	82
Sound power level in cooling	(6)(7)	dB(A)	101	101	102	102	102	102
Sound power level in heating	(6)(8)	dB(A)	0	0	0	0	0	0
SIZE AND WEIGHT								
A	(9)	mm	4850	4850	4950	4950	4650	4650
B	(9)	mm	1150	1150	1700	1700	2250	2250
H	(9)	mm	2200	2200	2150	2150	2230	2230
Operating weight	(9)	kg	6950	7090	10170	10350	14330	14390

Notes:
1 Plant (side) cooling exchanger water (in/out) 12°C/7°C; Source (side) heat exchanger water (in/out) 30°C/35°C.
2 Values in compliance with EN14511-3:2013.
3 Plant (side) heating exchanger water (in/out) 40°C/45°C; Source (side) heat exchanger water (in/out) 10°C/6,6°C
4 Seasonal space heating energy efficiency class LOW TEMPERATURE in AVERAGE climate conditions [REGULATION (EU) N. 813/2013]
5 Average sound pressure level at 1m distance, unit in a free field on a reflective surface; non-binding value calculated from the sound power level.
6 Sound power on the basis of measurements made in compliance with ISO 9614.
7 Sound power level in cooling, indoors.
8 Sound power level in heating, indoors.
9 Unit in standard configuration/execution, without optional accessories.
10 Seasonal energy efficiency of the cooling environment [REGULATION (EU) N. 2016/2281]
11 Seasonal space heating energy index
12 Seasonal energy efficiency of the space cooling
13 Seasonal performance coefficient
14 Seasonal space heating energy efficiency
The units highlighted in this publication contain HFC R134a [GWP_{100} 1430] fluorinated greenhouse gases.
Certified data in EUROVENT

FOCS2-W / CA-E / H			1301	1401	1601	1801	2101	2401	2802	3202	3602
Power supply		V/ph/Hz	400/3/50	400/3/50	400/3/50	400/3/50	400/3/50	400/3/50	400/3/50	400/3/50	400/3/50
PERFORMANCE											
COOLING ONLY (GROSS VALUE)											
Cooling capacity	(1)	kW	321	365	442	506	574	649	729	884	1012
Total power input	(1)	kW	57,3	65,1	79,1	90,3	103	116	130	158	180
EER	(1)	kW/kW	5,60	5,60	5,59	5,61	5,59	5,59	5,60	5,59	5,61
ESEER	(1)	kW/kW	6,49	6,50	6,30	6,40	6,37	6,40	6,66	6,57	6,73
COOLING ONLY (EN14511 VALUE)											
Cooling capacity	(1)(2)	kW	320	363	440	504	571	646	727	880	1009
EER	(1)(2)	kW/kW	5,32	5,33	5,30	5,32	5,31	5,30	5,34	5,32	5,37
ESEER	(1)(2)	kW/kW	5,83	5,83	5,65	5,72	5,72	5,70	5,96	5,84	6,06
Cooling energy class			A	A	A	A	A	A	A	A	A
HEATING ONLY (GROSS VALUE)											
Total heating capacity	(3)	kW	357	407	487	558	638	720	813	977	1118
Total power input	(3)	kW	73,1	83,1	99,4	114	129	146	166	199	227
COP		kW/kW	4,89	4,89	4,90	4,92	4,94	4,93	4,89	4,91	4,92
HEATING ONLY (EN14511 VALUE)											
Total heating capacity	(3)(2)	kW	359	408	489	560	640	723	816	980	1122
COP	(3)(2)	kW/kW	4,60	4,60	4,61	4,62	4,63	4,62	4,61	4,61	4,69
Cooling energy class			A	A	A	A	A	A	A	A	A
ENERGY EFFICIENCY											
SEASONAL EFFICIENCY IN COOLING (Reg. EU 2016/2281)											
Ambient refrigeration											
Prated,c	(10)	kW	320	363	440	504	571	646	727	880	1009
SEER	(10)(11)		5,88	5,90	5,88	5,89	5,88	5,89	6,16	6,08	6,31
Performance ηs	(10)(12)	%	227	228	227	228	227	228	238	235	244
SEASONAL EFFICIENCY IN HEATING (Reg. EU 813/2013)											
PDesign	(4)	kW	-	-	-	-	-	-	-	-	-
SCOP	(4)(13)		-	-	-	-	-	-	-	-	-
Performance ηs	(4)(14)	%	-	-	-	-	-	-	-	-	-
Seasonal efficiency class	(4)		-	-	-	-	-	-	-	-	-
EXCHANGERS											
HEAT EXCHANGER USER SIDE IN REFRIGERATION											
Water flow	(1)	l/s	15,33	17,44	21,13	24,21	27,44	31,06	34,88	42,28	48,41
Pressure drop	(1)	kPa	45,7	47,7	53,5	53,4	52,8	60,2	51,9	58,6	41,3
HEAT EXCHANGER USER SIDE IN HEATING											
Water flow	(3)	l/s	23,01	26,17	30,56	35,56	41,13	45,28	52,34	62,92	72,05
Pressure drop	(3)	kPa	103	107	112	115	119	128	117	130	91,5
HEAT EXCHANGER SOURCE SIDE IN REFRIGERATION											
Water flow	(1)	l/s	18,02	20,49	24,84	28,44	32,24	36,50	40,99	49,69	56,86
Pressure drop	(1)	kPa	48,4	46,6	51,6	52,6	54,3	56,3	46,6	51,5	52,8
HEAT EXCHANGER SOURCE SIDE IN HEATING											
Water flow	(3)	l/s	17,26	19,62	23,50	26,95	30,77	34,75	39,25	47,14	53,95
Pressure drop	(3)	kPa	44,4	42,8	46,2	47,3	49,5	51,0	42,7	46,4	47,5
REFRIGERANT CIRCUIT											
Compressors nr.		N°	1	1	1	1	1	1	2	2	2
No. Circuits		N°	1	1	1	1	1	1	2	2	2
Refrigerant charge		kg	50,0	60,0	75,0	72,0	80,0	100	124	140	160
NOISE LEVEL											
Sound Pressure	(5)	dB(A)	79	78	78	78	78	78	80	80	80
Sound power level in cooling	(6)(7)	dB(A)	97	97	97	97	97	97	99	99	99
Sound power level in heating	(6)(8)	dB(A)	0	0	0	0	0	0	0	0	0
SIZE AND WEIGHT											
A	(9)	mm	4250	4250	4150	4150	4130	4350	4550	4950	5170
B	(9)	mm	900	900	900	900	900	900	1150	1150	1150
H	(9)	mm	1815	1910	1990	1990	1990	2090	2050	2200	2200
Operating weight	(9)	kg	2470	2770	3570	3750	3790	4230	5390	6460	6920

Notes:
1 Plant (side) cooling exchanger water (in/out) 12°C/7°C; Source (side) heat exchanger water (in/out) 30°C/35°C.
2 Values in compliance with EN14511-3:2013.
3 Plant (side) heating exchanger water (in/out) 40°C/45°C; Source (side) heat exchanger water (in/out) 10°C/7°C
4 Seasonal space heating energy efficiency class LOW TEMPERATURE in AVERAGE climate conditions [REGULATION (EU) N. 813/2013]
5 Average sound pressure level at 1m distance, unit in a free field on a reflective surface; non-binding value calculated from the sound power level.
6 Sound power on the basis of measurements made in compliance with ISO 9614.
7 Sound power level in cooling, indoors.
8 Sound power level in heating, indoors.
9 Unit in standard configuration/execution, without optional accessories.
10 Seasonal energy efficiency of the cooling environment [REGULATION (EU) N. 2016/2281]
11 Seasonal space heating energy index
12 Seasonal energy efficiency of the space cooling
13 Seasonal performance coefficient
14 Seasonal space heating energy efficiency
The units highlighted in this publication contain HFC R134a [GWP_{100} 1430] fluorinated greenhouse gases.

FOCS2-W / CA-E / H			4202	4802	2701	3001	5402	7204	7804	8404
Power supply		V/ph/Hz	400/3/50	400/3/50	400/3/50	400/3/50	400/3/50	400/3/50	400/3/50	400/3/50
PERFORMANCE										
COOLING ONLY (GROSS VALUE)										
Cooling capacity	(1)	kW	1147	1299	707	781	1411	2025	2157	2294
Total power input	(1)	kW	205	232	128	141	256	361	386	410
EER	(1)	kW/kW	5,59	5,59	5,53	5,55	5,52	5,61	5,60	5,59
ESEER	(1)	kW/kW	6,64	6,66	6,38	6,41	6,66	6,75	6,64	6,65
COOLING ONLY (EN14511 VALUE)										
Cooling capacity	(1)(2)	kW	1143	1293	704	779	1407	2019	2149	2286
EER	(1)(2)	kW/kW	5,33	5,31	5,27	5,30	5,29	5,40	5,35	5,35
ESEER	(1)(2)	kW/kW	5,91	5,87	5,76	5,81	6,00	6,13	5,94	5,97
Cooling energy class			A	A	A	A	A	A	A	A
HEATING ONLY (GROSS VALUE)										
Total heating capacity	(3)	kW	1271	1423	780	863	1558	2235	2352	2543
Total power input	(3)	kW	258	292	160	176	319	454	484	516
COP		kW/kW	4,93	4,88	4,89	4,90	4,88	4,92	4,86	4,93
HEATING ONLY (EN14511 VALUE)										
Total heating capacity	(3)(2)	kW	1275	1428	783	866	1563	2242	2359	2551
COP	(3)(2)	kW/kW	4,65	4,65	4,61	4,64	4,64	4,70	4,66	4,68
Cooling energy class			A	A	A	A	A	A	A	A
ENERGY EFFICIENCY										
SEASONAL EFFICIENCY IN COOLING (Reg. EU 2016/2281)										
Ambient refrigeration										
Prated,c	(10)	kW	1143	1293	704	779	1407	-	-	-
SEER	(10)(11)		6,18	6,16	5,89	5,90	6,23	-	-	-
Performance ηs	(10)(12)	%	239	238	228	228	241	-	-	-
SEASONAL EFFICIENCY IN HEATING (Reg. EU 813/2013)										
PDesign	(4)	kW	-	-	-	-	-	-	-	-
SCOP	(4)(13)		-	-	-	-	-	-	-	-
Performance ηs	(4)(14)	%	-	-	-	-	-	-	-	-
Seasonal efficiency class	(4)		-	-	-	-	-	-	-	-
EXCHANGERS										
HEAT EXCHANGER USER SIDE IN REFRIGERATION										
Water flow	(1)	l/s	54,85	62,10	33,80	37,36	67,48	96,82	103,15	109,69
Pressure drop	(1)	kPa	55,0	65,0	51,5	47,2	46,0	41,3	59,3	54,6
HEAT EXCHANGER USER SIDE IN HEATING										
Water flow	(3)	l/s	80,00	80,00	50,24	55,56	99,72	144,09	129,44	160,00
Pressure drop	(3)	kPa	117	108	114	104	101	91,5	93,4	116
HEAT EXCHANGER SOURCE SIDE IN REFRIGERATION										
Water flow	(1)	l/s	64,46	72,98	39,78	43,96	79,45	113,72	121,21	128,92
Pressure drop	(1)	kPa	54,4	56,6	51,7	49,3	51,5	52,0	53,3	53,8
HEAT EXCHANGER SOURCE SIDE IN HEATING										
Water flow	(3)	l/s	61,38	68,70	37,67	41,64	75,22	107,89	113,52	122,75
Pressure drop	(3)	kPa	49,3	50,2	46,4	44,3	46,2	46,8	46,8	48,8
REFRIGERANT CIRCUIT										
Compressors nr.		N°	2	2	1	1	2	4	4	4
No. Circuits		N°	2	2	1	1	2	4	4	4
Refrigerant charge		kg	174	210	115	105	220	320	348	348
NOISE LEVEL										
Sound Pressure	(5)	dB(A)	79	79	80	80	81	82	82	82
Sound power level in cooling	(6)(7)	dB(A)	99	99	99	99	101	102	102	102
Sound power level in heating	(6)(8)	dB(A)	0	0	0	0	0	0	0	0
SIZE AND WEIGHT										
A	(9)	mm	4920	4920	4350	4350	5200	5220	4900	4900
B	(9)	mm	1150	1285	900	900	1285	2250	2250	2250
H	(9)	mm	2350	2430	2180	2180	2440	2305	2455	2455
Operating weight	(9)	kg	7900	8560	4760	4870	8850	13720	15850	16100

Notes:
1 Plant (side) cooling exchanger water (in/out) 12°C/7°C; Source (side) heat exchanger water (in/out) 30°C/35°C.
2 Values in compliance with EN14511-3:2013.
3 Plant (side) heating exchanger water (in/out) 40°C/45°C; Source (side) heat exchanger water (in/out) 10°C/7°C
4 Seasonal space heating energy efficiency class LOW TEMPERATURE in AVERAGE climate conditions [REGULATION (EU) N. 813/2013]
5 Average sound pressure level at 1m distance, unit in a free field on a reflective surface; non-binding value calculated from the sound power level.
6 Sound power on the basis of measurements made in compliance with ISO 9614.
7 Sound power level in cooling, indoors.
8 Sound power level in heating, indoors.
9 Unit in standard configuration/execution, without optional accessories.
10 Seasonal energy efficiency of the cooling environment [REGULATION (EU) N. 2016/2281]
11 Seasonal space heating energy index
12 Seasonal energy efficiency of the space cooling
13 Seasonal performance coefficient
14 Seasonal space heating energy efficiency
The units highlighted in this publication contain HFC R134a [GWP_{100} 1430] fluorinated greenhouse gases.
Certified data in EUROVENT

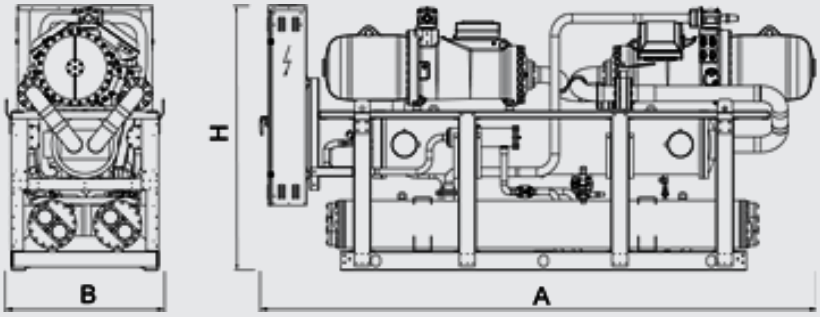
H
B
A

HEAT PUMPS

i-FX-W (1+i) /H 1402 - 4652

Water to water high efficiency heat pump, reversible on hydraulic side 532-1784 kW



Version

CA	High energy efficiency units

Configurations

H	Function with heat pump, reversible on hydraulic side

Features

HIGH EFFICIENCY

Unit with high efficiency and reduced energy consumption, thanks to the inverter technology, contributing to lower operating costs and therefore achieving a quick return on investment.

FLEXIBILITY

Unit featured by remarkable application flexibility thanks to the inverter tecnology which allows to obtain, taking in consideration the cooling capacity needed, the best result about costs/performances and maximum efficiency.

TOTAL VERSATILITY

Unit designed gathering in a single circuit a compressor with step regulation and one working with inverter, in order to guarantee the best answer to plant necessities both at full and at part loads.

MAXIMUM COMPACTNESS

Maximum compactness to achieve a very high flexibility in the design process and installation operations, offering a premium solution in case of reduced clearances or when retrofitting existing installations.

Accessory

- Touch Screen visual display
- VPF (Variable Primary Flow) system
- Set-up for remote connectivity with ModBus/Echelon protocol cards
- Several devices for condensation´s control

Single circuit indoor unit for the production of chilled/hot water, with fixed speed and variable speed (Inverter Driven) screw compressors optimized for R134a, electronic expansion valve, high performing shell and tube condenser and shell and tube flooded evaporator, both designed and produced by Climaveneta. These technological solutions enhance the EER values over 5,7 at Eurovent standard conditions.
The resulting unit is extremely compact, thanks to the strategic layout, designed without base, frame and panels.

Controls

W3000TE

The brand new W3000TE controller offers advanced functions and algorithms. The large format keyboard and the wide LCD display favour an easy and safe access to the machine setup and a complete view of unit's staus. The assessment and intervention on the unit is managed through a multi-level menu, with selectable user's language. The led icons immediately show the operating status of the circuits, as well as of the fans and of the water pumps (if present). An optional extra is the touch screen interface: 7.0" WVGA colour display with adjustable LED backlight and front USB port. The touch screen technology allows intuitive navigation between the various screens, safe access to the data with a three-level password protection as well as the graphic display of the performance of some monitored measurements.
The diagnostics comprises a complete alarm management system, with "black box" (via PC) and alarm log functions (via display or also PC) for a better analysis of the unit performance.
For the systems made of several units, the adjustment of the resources is performed by optional proprietary devices.
Consumption metering and performance measurement are possible as well. Supervision can be easily developed via proprietary devices or the integration in third party systems by means of the most common protocols as ModBus, Bacnet-over-IP, Echelon LonWorks, Bacnet MS/TP protocols.
Compatibility with the remote keyboard managing up to 8 units.
The presence of the programmable timer allows the creation of an operating profile containing up to 4 typical days and 10 time bands.
The control is characterized by the continuous modulation of the unit capacity, based on PID algorithms and referring to the water delivery temperature.
Optionally (VPF package), capacity modulation can be integrated with hydraulic flow modulation, thanks to inverter-driven pumps and to specific resources for the hydraulic circuit.



i-FX-W (1+i) /H			1402	1752	1902	2152	2602
Power supply		V/ph/Hz	400/3/50	400/3/50	400/3/50	400/3/50	400/3/50
PERFORMANCE							
COOLING ONLY (GROSS VALUE)							
Cooling capacity	(1)	kW	532	665	721	819	999
Total power input	(1)	kW	97,9	120	130	148	182
EER	(1)	kW/kW	5,44	5,56	5,55	5,52	5,50
ESEER	(1)	kW/kW	8,52	8,57	8,47	8,62	8,63
COOLING ONLY (EN14511 VALUE)							
Cooling capacity	(1)(2)	kW	531	663	719	817	996
EER	(1)(2)	kW/kW	5,22	5,34	5,32	5,30	5,28
ESEER	(1)(2)	kW/kW	7,46	7,51	7,40	7,53	7,53
Cooling energy class			-	-	-	-	-
HEATING ONLY (GROSS VALUE)							
Total heating capacity	(3)	kW	588	725	795	903	1089
Total power input	(3)	kW	124	151	165	188	227
COP		kW/kW	4,75	4,81	4,83	4,81	4,80
HEATING ONLY (EN14511 VALUE)							
Total heating capacity	(3)(2)	kW	590	727	798	906	1092
COP	(3)(2)	kW/kW	4,57	4,65	4,65	4,64	4,63
Cooling energy class							
ENERGY EFFICIENCY							
SEASONAL EFFICIENCY IN COOLING (Reg. EU 2016/2281)							
Ambient refrigeration							
Prated,c	(10)	kW	487	608	659	750	914
SEER	(10)(11)		7,30	7,25	7,17	7,31	7,44
Performance ηs	(10)(12)	%	284	282	279	284	289
SEASONAL EFFICIENCY IN HEATING (Reg. EU 813/2013)							
PDesign	(4)	kW	-	-	-	-	-
SCOP	(4)(13)		-	-	-	-	-
Performance ηs	(4)(14)	%	-	-	-	-	-
Seasonal efficiency class	(4)		-	-	-	-	-
EXCHANGERS							
HEAT EXCHANGER USER SIDE IN REFRIGERATION							
Water flow	(1)	l/s	25,45	31,80	34,48	39,18	47,76
Pressure drop	(1)	kPa	36,3	41,3	40,2	39,4	44,0
HEAT EXCHANGER USER SIDE IN HEATING							
Water flow	(3)	l/s	34,17	38,89	44,44	50,00	59,72
Pressure drop	(3)	kPa	65,4	61,7	66,8	64,2	68,9
HEAT EXCHANGER SOURCE SIDE IN REFRIGERATION							
Water flow	(1)	l/s	30,03	37,40	40,56	46,13	56,27
Pressure drop	(1)	kPa	44,8	42,4	49,9	49,6	46,4
HEAT EXCHANGER SOURCE SIDE IN HEATING							
Water flow	(3)	l/s	28,37	35,00	38,37	43,61	52,56
Pressure drop	(3)	kPa	40,0	37,2	44,7	44,4	40,5
REFRIGERANT CIRCUIT							
Compressors nr.		N°	2	2	2	2	2
No. Circuits		N°	1	1	1	1	1
Refrigerant charge		kg	118	160	164	177	258
NOISE LEVEL							
Sound Pressure	(5)	dB(A)	82	82	81	83	83
Sound power level in cooling	(6)(7)	dB(A)	100	100	100	102	102
Sound power level in heating	(6)(8)	dB(A)	100	100	100	102	102
SIZE AND WEIGHT							
A	(9)	mm	2950	3310	3310	3310	4475
B	(9)	mm	1320	1425	1445	1480	1410
H	(9)	mm	1805	1935	2000	2150	2250
Operating weight	(9)	kg	3350	4280	4410	4830	6630

Notes:
1 Plant (side) cooling exchanger water (in/out) 12°C/7°C; Source (side) heat exchanger water (in/out) 30°C/35°C.
2 Values in compliance with EN14511-3:2013.
3 Plant (side) heating exchanger water (in/out) 40°C/45°C; Source (side) heat exchanger water (in/out) 10°C/6,7°C
4 Seasonal space heating energy efficiency class LOW TEMPERATURE in AVERAGE climate conditions [REGULATION (EU) N. 813/2013]
5 Average sound pressure level at 1m distance, unit in a free field on a reflective surface; non-binding value calculated from the sound power level.
6 Sound power on the basis of measurements made in compliance with ISO 9614.
7 Sound power level in cooling, indoors.
8 Sound power level in heating, indoors.
9 Unit in standard configuration/execution, without optional accessories.
10 Seasonal energy efficiency of the cooling environment [REGULATION (EU) N. 2016/2281]
11 Seasonal space heating energy index
12 Seasonal energy efficiency of the space cooling
13 Seasonal performance coefficient
14 Seasonal space heating energy efficiency
The units highlighted in this publication contain HFC R134a [GWP_{100} 1430] fluorinated greenhouse gases.

i-FX-W (1+i) /H			3002	3402	3852	4252	4652
Power supply		V/ph/Hz	400/3/50	400/3/50	400/3/50	400/3/50	400/3/50
PERFORMANCE							
COOLING ONLY (GROSS VALUE)							
Cooling capacity	(1)	kW	1143	1296	1472	1607	1784
Total power input	(1)	kW	207	233	265	292	330
EER	(1)	kW/kW	5,51	5,56	5,57	5,51	5,41
ESEER	(1)	kW/kW	8,55	8,56	8,60	8,44	8,39
COOLING ONLY (EN14511 VALUE)							
Cooling capacity	(1)(2)	kW	1139	1293	1468	1602	1778
EER	(1)(2)	kW/kW	5,32	5,36	5,39	5,31	5,22
ESEER	(1)(2)	kW/kW	7,59	7,65	7,74	7,49	7,44
Cooling energy class			-	-	-	-	-
HEATING ONLY (GROSS VALUE)							
Total heating capacity	(3)	kW	1245	1433	1627	1758	1932
Total power input	(3)	kW	259	292	330	362	407
COP		kW/kW	4,81	4,91	4,92	4,85	4,75
HEATING ONLY (EN14511 VALUE)							
Total heating capacity	(3)(2)	kW	1248	1437	1631	1763	1936
COP	(3)(2)	kW/kW	4,65	4,73	4,76	4,69	4,61
Cooling energy class							
ENERGY EFFICIENCY							
SEASONAL EFFICIENCY IN COOLING (Reg. EU 2016/2281)							
Ambient refrigeration							
Prated,c	(10)	kW	1046	1186	1348	1482	1632
SEER	(10)(11)		7,58	7,55	7,67	7,36	7,43
Performance ηs	(10)(12)	%	295	294	299	287	289
SEASONAL EFFICIENCY IN HEATING (Reg. EU 813/2013)							
PDesign	(4)	kW	-	-	-	-	-
SCOP	(4)(13)		-	-	-	-	-
Performance ηs	(4)(14)	%	-	-	-	-	-
Seasonal efficiency class	(4)		-	-	-	-	-
EXCHANGERS							
HEAT EXCHANGER USER SIDE IN REFRIGERATION							
Water flow	(1)	l/s	54,66	61,97	70,41	76,87	85,33
Pressure drop	(1)	kPa	44,5	37,8	36,6	43,7	53,8
HEAT EXCHANGER USER SIDE IN HEATING							
Water flow	(3)	l/s	68,05	86,11	97,22	97,22	97,22
Pressure drop	(3)	kPa	69,0	73,0	69,8	69,8	69,8
HEAT EXCHANGER SOURCE SIDE IN REFRIGERATION							
Water flow	(1)	l/s	64,37	72,90	82,80	90,53	100,75
Pressure drop	(1)	kPa	36,0	39,9	35,5	42,5	35,5
HEAT EXCHANGER SOURCE SIDE IN HEATING							
Water flow	(3)	l/s	60,09	69,18	78,54	84,86	93,26
Pressure drop	(3)	kPa	31,4	36,0	32,0	37,3	30,4
REFRIGERANT CIRCUIT							
Compressors nr.		N°	2	2	2	2	2
No. Circuits		N°	1	1	1	1	1
Refrigerant charge		kg	295	315	323	338	338
NOISE LEVEL							
Sound Pressure	(5)	dB(A)	83	82	82	84	84
Sound power level in cooling	(6)(7)	dB(A)	102	102	102	104	104
Sound power level in heating	(6)(8)	dB(A)	102	102	102	104	104
SIZE AND WEIGHT							
A	(9)	mm	4475	4570	4650	4650	4850
B	(9)	mm	1405	1435	1495	1495	1495
H	(9)	mm	2250	2380	2500	2500	2500
Operating weight	(9)	kg	7470	8220	8800	8930	9340

Notes:
1 Plant (side) cooling exchanger water (in/out) 12°C/7°C; Source (side) heat exchanger water (in/out) 30°C/35°C.
2 Values in compliance with EN14511-3:2013.
3 Plant (side) heating exchanger water (in/out) 40°C/45°C; Source (side) heat exchanger water (in/out) 10°C/6,7°C
4 Seasonal space heating energy efficiency class LOW TEMPERATURE in AVERAGE climate conditions [REGULATION (EU) N. 813/2013]
5 Average sound pressure level at 1m distance, unit in a free field on a reflective surface; non-binding value calculated from the sound power level.
6 Sound power on the basis of measurements made in compliance with ISO 9614.
7 Sound power level in cooling, indoors.
8 Sound power level in heating, indoors.
9 Unit in standard configuration/execution, without optional accessories.
10 Seasonal energy efficiency of the cooling environment [REGULATION (EU) N. 2016/2281]
11 Seasonal space heating energy index
12 Seasonal energy efficiency of the space cooling
13 Seasonal performance coefficient
14 Seasonal space heating energy efficiency
The units highlighted in this publication contain HFC R134a [GWP_{100} 1430] fluorinated greenhouse gases.
Certified data in EUROVENT

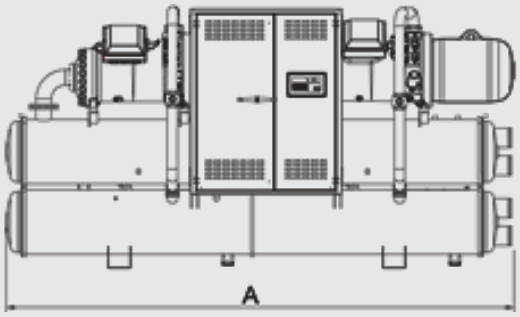
A

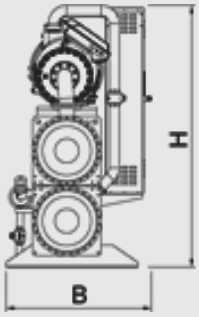
H
B

HEAT PUMPS

BWR MTD2 0011ms - 0121ts

Reversible heat pump, geothermal source
5,08-43,6 kW



The MTD2 heat pumps optimized for geothermal systems are reversible units for heating, cooling and domestic hot water by external three-way valve (accessory). Both the MTD2 heat pumps are suitable for traditional heating systems and radiant panels. The geothermal systems, working with water at lower temperatures, ensure a higher yield and are a particularly suitable in new buildings with low energy consumption that point on using renewable energy resources. The installation is greatly simplified through the integration of the group simply by connecting the unit the water plant and the electricity so that it can be put into operation.

Version

- Basic

Features

Structure and base in hot-dip galvanised steel with epoxy powder paint finish.
High efficiency, low pressure drop AISI 316 stainless steel plate heat exchangers, fitted with heating element to provide frost protection.
Hermetic scroll type compressors, equipped with the crankcase heater and thermal protection
Case panels are insulated within low noise material for further improvement of silence
Rubber vibration damper.
Soft starter for 230V/1/50Hz units (ms)
Phase sequence control relay for three phase models
The water circuit comes complete with:

- Variable flow circulator for 0011÷0061 models and centrifugal variable flow pump for 0071 ÷ 0121 models, plant side
- Variable flow circulator for 0011÷0031 models, centrifugal variable flow pump for 0041÷0121 models on source side (for geothermal systems, closed vertical or horizontal loops)
- Safety valve
- Expansion tank
- Manual filling assembly
- Pressure gauge
- Air vent valve
- Drain valve on both the plant and the source circuits.
- Differential pressure switch on source side and system side

Accessory

- Wired room terminal with backlit display, and with temperature and umidity probe
- Extension module for system configuration
- Three-way valve for domestic hot water
- Electric heater of integration for the heating system
- Electric heater for hot water cylinder, of integration and for anti-legionellosis
- Cascade management kit
- Serial card RS485 for ModBus
- Buffer tank 35,100,200 liters
- Hot water cylinder 300,500 liters
- 300 liters thermal store for domestic hot water, for DOMH2O kit
- 300,500,1000 liters thermal store for domestic hot water with solar heat exchanger, for DOMH2O kit
- DOMH2O15 e DOMH2O24 kit for domestic hot water with external plate heat exchanger and pump

Controls

NADISYSTEM
Electronic control Nadisystem provides great application flexibility. The remote keyboard kit wired indoor and outdoor temperature sensors allow dynamic control of delivery temperature water, optimizing comfort in the room and increasing the energy efficiency. The electronic board allows you to manage:
-wired remote control, backlit display complete with remote temperature and humidity probe
-outdoor temperature sensor for water plant side modular set point compensation
-a zone of direct heating for radiator, floor heating or fan coil
-domestic hot water production by external three-way valve (accessory)
-Electrical heating element for possible integration and anti-legionella cycle for cylinder
-boiler or electric heater in substitution or in addition
-the room controller can customise up to six time bands. The presence of the programmable timer allows the creation of an operating profile containing up to 6 time bands.
-up to 4 heat pump in cascade (with N-CM component)
-several solutions through appropriate configurations of the controller and use of dedicated extension modules (accessorie), up to 5 zone.



APPLICATION HYDRONIC TERMINAL - GEOTHERMAL SOURCE

BWR MTD2			0011ms	0025ms	0031ms	0041ms	0025t	0031t
Power supply		V/ph/Hz	230/1/50	230/1/50	230/1/50	230/1/50	400/3/50	400/3/50
COOLING ONLY (GROSS VALUE)								
Cooling capacity	(1)	kW	5,08	6,97	8,57	11,0	7,17	8,67
Total power input	(1)	kW	1,61	2,01	2,61	3,21	1,91	2,51
EER	(1)	kW/kW	3,16	3,47	3,28	3,43	3,75	3,45
ESEER	(1)	kW/kW						
COOLING ONLY (EN14511 VALUE)								
Cooling capacity	(1)(2)	kW	5,09	6,98	8,60	11,0	7,18	8,70
EER	(1)(2)	kW/kW	2,78	2,96	2,77	2,76	3,18	2,90
ESEER	(1)(2)	kW/kW	-	-	-	-	-	-
Cooling energy class			G	F	G	G	F	G
HEATING ONLY (GROSS VALUE)								
Total heating capacity	(3)	kW	5,19	7,08	8,98	11,3	6,98	8,68
Total power input	(3)	kW	1,70	2,30	3,00	3,60	2,20	2,70
COP	(3)	kW/kW	3,05	3,08	2,99	3,14	3,17	3,21
HEATING ONLY (EN14511 VALUE)								
Total heating capacity	(3)	kW	5,18	7,07	8,95	11,3	6,97	8,65
COP	(3)	kW/kW	2,69	2,66	2,56	2,56	2,72	2,71
Cooling energy class	(3)		G	G	G	G	G	G
ENERGY EFFICIENCY								
SEASONAL EFFICIENCY IN COOLING (Reg. EU 2016/2281)								
Ambient refrigeration								
Prated,c	(10)	kW	-	-	-	-	-	-
SEER	(10)(11)		-	-	-	-	-	-
Performance ηs	(10)(12)	%	-	-	-	-	-	-
SEASONAL EFFICIENCY IN HEATING (Reg. EU 813/2013)								
PDesign	(4)	kW	6,08	8,24	10,3	13,2	8,49	10,3
SCOP	(4)(13)		3,59	3,35	3,32	3,34	3,62	3,60
Performance ηs	(4)(14)	%	135	126	125	126	137	136
Seasonal efficiency class	(4)		A+	A+	A+	A+	A+	A+
EXCHANGERS								
HEAT EXCHANGER USER SIDE IN REFRIGERATION								
Water flow	(1)	l/s	0,24	0,33	0,41	0,52	0,34	0,41
Available unit's head	(1)	kPa	61,9	68,0	97,2	93,3	67,2	96,8
HEAT EXCHANGER USER SIDE IN HEATING								
Water flow	(3)	l/s	0,25	0,34	0,43	0,54	0,34	0,42
Available unit's head	(3)	kPa	61,3	67,3	95,0	91,5	67,7	96,4
HEAT EXCHANGER SOURCE SIDE IN REFRIGERATION								
Water flow	(1)	l/s	0,34	0,46	0,58	0,73	0,47	0,58
Pressure drop	(1)	kPa	17,1	24,5	37,1	41,2	25,1	37,1
HEAT EXCHANGER SOURCE SIDE IN HEATING								
Water flow	(3)	l/s	0,32	0,44	0,55	0,70	0,44	0,55
Pressure drop	(3)	kPa	14,8	22,0	33,7	38,2	21,9	33,5
REFRIGERANT CIRCUIT								
Compressors nr.		N°	1	1	1	1	1	1
No. Circuits		N°	1	1	1	1	1	1
Refrigerant charge		kg	1,10	1,15	1,24	1,55	1,15	1,24
NOISE LEVEL								
Sound power level in cooling	(5)(6)	dB(A)	52	53	53	58	53	53
Sound power level in heating	(5)(7)	dB(A)	52	53	53	58	53	53
Sound Pressure	(8)	dB(A)	37	38	38	43	38	38
SIZE AND WEIGHT								
A	(9)	mm	845	845	845	845	845	845
B	(9)	mm	680	680	680	680	680	680
H	(9)	mm	1105	1105	1105	1105	1105	1105
Operating weight	(9)	kg	188	190	195	210	190	195

Notes:
1 Plant (side) cooling exchanger water (in/out) 12°C/7°C; Source (side) heat exchanger water (in/out) 30°C/35°C.
2 Values in compliance with EN14511-3:2013.
3 Plant (side) heating exchanger water (in/out) 40°C/45°C; Source (side) heat exchanger water (in/out) 0°C/-3°C (Gly 30%).
4 Seasonal space heating energy efficiency class LOW TEMPERATURE in AVERAGE climate conditions [REGULATION (EU) N. 813/2013]
5 Sound power on the basis of measurements made in compliance with ISO 9614.
6 Sound power level in cooling, indoors.
7 Sound power level in heating, indoors.
8 Average sound pressure level at 1m distance, unit in a free field on a reflective surface; non-binding value calculated from the sound power level.
9 Unit in standard configuration/execution, without optional accessories.
10 Seasonal energy efficiency of the cooling environment [REGULATION (EU) N. 2016/2281]
11 Seasonal space heating energy index
12 Seasonal energy efficiency of the space cooling
13 Seasonal performance coefficient
14 Seasonal space heating energy efficiency
The units highlighted in this publication contain HFC R410A [GWP_{100} 2088] fluorinated greenhouse gases.

APPLICATION HYDRONIC TERMINAL - GEOTHERMAL SOURCE

BWR MTD2			0041t	0061t	0071t	0091t	0101t	0121t
Power supply		V/ph/Hz	400/3/50	400/3/50	400/3/50	400/3/50	400/3/50	400/3/50
COOLING ONLY (GROSS VALUE)								
Cooling capacity	(1)	kW	11,5	15,3	19,3	22,3	25,3	32,5
Total power input	(1)	kW	3,31	4,12	5,12	5,92	6,93	8,64
EER	(1)	kW/kW	3,47	3,71	3,77	3,77	3,65	3,76
ESEER	(1)	kW/kW						
COOLING ONLY (EN14511 VALUE)								
Cooling capacity	(1)(2)	kW	11,5	15,3	19,4	22,4	25,5	32,7
EER	(1)(2)	kW/kW	2,82	3,20	3,15	3,26	3,11	3,35
ESEER	(1)(2)	kW/kW	-	-	-	-	-	-
Cooling energy class			G	F	F	F	F	E
HEATING ONLY (GROSS VALUE)								
Total heating capacity	(3)	kW	11,8	15,2	18,7	21,7	25,0	31,8
Total power input	(3)	kW	3,70	4,40	5,60	6,20	7,40	9,00
COP	(3)	kW/kW	3,19	3,45	3,34	3,50	3,38	3,53
HEATING ONLY (EN14511 VALUE)								
Total heating capacity	(3)	kW	11,8	15,2	18,6	21,6	24,8	31,6
COP	(3)	kW/kW	2,62	2,98	2,78	3,00	2,84	3,10
Cooling energy class	(3)		G	F	G	F	G	F
ENERGY EFFICIENCY								
SEASONAL EFFICIENCY IN COOLING (Reg. EU 2016/2281)								
Ambient refrigeration								
Prated,c	(10)	kW	-	-	-	-	-	-
SEER	(10)(11)		-	-	-	-	-	-
Performance ηs	(10)(12)	%	-	-	-	-	-	-
SEASONAL EFFICIENCY IN HEATING (Reg. EU 813/2013)								
PDesign	(4)	kW	13,8	17,9	22,1	25,7	29,6	37,2
SCOP	(4)(13)		3,38	3,76	3,55	3,85	3,70	3,84
Performance ηs	(4)(14)	%	127	143	134	146	140	145
Seasonal efficiency class	(4)		A+	A+	A+	A+	A+	A+
EXCHANGERS								
HEAT EXCHANGER USER SIDE IN REFRIGERATION								
Water flow	(1)	l/s	0,55	0,73	0,92	1,07	1,21	1,55
Available unit's head	(1)	kPa	91,2	86,4	162	154	187	175
HEAT EXCHANGER USER SIDE IN HEATING								
Water flow	(3)	l/s	0,57	0,73	0,90	1,05	1,21	1,54
Available unit's head	(3)	kPa	89,3	86,5	164	156	187	176
HEAT EXCHANGER SOURCE SIDE IN REFRIGERATION								
Water flow	(1)	l/s	0,76	1,00	1,26	1,46	1,66	2,12
Pressure drop	(1)	kPa	44,8	45,8	50,0	43,1	58,5	59,7
HEAT EXCHANGER SOURCE SIDE IN HEATING								
Water flow	(3)	l/s	0,74	0,98	1,20	1,42	1,61	2,08
Pressure drop	(3)	kPa	42,2	43,9	45,4	40,9	55,0	57,5
REFRIGERANT CIRCUIT								
Compressors nr.		N°	1	1	1	1	1	1
No. Circuits		N°	1	1	1	1	1	1
Refrigerant charge		kg	1,55	1,70	2,65	3,10	3,50	3,70
NOISE LEVEL								
Sound power level in cooling	(5)(6)	dB(A)	58	59	66	66	70	70
Sound power level in heating	(5)(7)	dB(A)	58	59	66	66	70	70
Sound Pressure	(8)	dB(A)	43	44	51	51	55	55
SIZE AND WEIGHT								
A	(9)	mm	845	845	845	845	845	845
B	(9)	mm	680	680	680	680	680	680
H	(9)	mm	1105	1105	1105	1105	1105	1105
Operating weight	(9)	kg	210	225	230	245	250	270

Notes:
1 Plant (side) cooling exchanger water (in/out) 12°C/7°C; Source (side) heat exchanger water (in/out) 30°C/35°C.
2 Values in compliance with EN14511-3:2013.
3 Plant (side) heating exchanger water (in/out) 40°C/45°C; Source (side) heat exchanger water (in/out) 0°C/-3°C (Gly 30%).
4 Seasonal space heating energy efficiency class LOW TEMPERATURE in AVERAGE climate conditions [REGULATION (EU) N. 813/2013]
5 Sound power on the basis of measurements made in compliance with ISO 9614.
6 Sound power level in cooling, indoors.
7 Sound power level in heating, indoors.
8 Average sound pressure level at 1m distance, unit in a free field on a reflective surface; non-binding value calculated from the sound power level.
9 Unit in standard configuration/execution, without optional accessories.
10 Seasonal energy efficiency of the cooling environment [REGULATION (EU) N. 2016/2281]
11 Seasonal space heating energy index
12 Seasonal energy efficiency of the space cooling
13 Seasonal performance coefficient
14 Seasonal space heating energy efficiency
The units highlighted in this publication contain HFC R410A [GWP_{100} 2088] fluorinated greenhouse gases.
Certified data in EUROVENT

APPLICATION FLOOR HEATING - GEOTHERMAL SOURCE

BWR MTD2			0011ms	0025ms	0031ms	0041ms	0025t	0031t
Power supply		V/ph/Hz	230/1/50	230/1/50	230/1/50	230/1/50	400/3/50	400/3/50
COOLING ONLY (GROSS VALUE)								
Cooling capacity	(1)	kW	6,97	9,56	11,7	14,6	9,26	11,8
Total power input	(1)	kW	1,61	2,01	2,61	3,31	1,91	2,51
EER	(1)	kW/kW	4,33	4,76	4,48	4,41	4,85	4,70
ESEER	(1)	kW/kW						
COOLING ONLY (EN14511 VALUE)								
Cooling capacity	(1)(2)	kW	6,98	9,57	11,7	14,6	9,27	11,8
EER	(1)(2)	kW/kW	3,84	4,08	3,77	3,54	4,13	3,93
ESEER	(1)(2)	kW/kW	-	-	-	-	-	-
Cooling energy class			G	F	G	G	F	G
HEATING ONLY (GROSS VALUE)								
Total heating capacity	(3)	kW	5,38	7,28	9,17	11,7	7,48	9,07
Total power input	(3)	kW	1,30	1,80	2,30	2,80	1,70	2,10
COP	(3)	kW/kW	4,14	4,04	3,99	4,18	4,40	4,32
HEATING ONLY (EN14511 VALUE)								
Total heating capacity	(3)	kW	5,37	7,27	9,14	11,7	7,47	9,04
COP	(3)	kW/kW	3,53	3,38	3,27	3,23	3,64	3,48
Cooling energy class	(3)		G	G	G	G	G	G
ENERGY EFFICIENCY								
SEASONAL EFFICIENCY IN COOLING (Reg. EU 2016/2281)								
Ambient refrigeration								
Prated,c	(10)	kW	-	-	-	-	-	-
SEER	(10)(11)		-	-	-	-	-	-
Performance ηs	(10)(12)	%	-	-	-	-	-	-
SEASONAL EFFICIENCY IN HEATING (Reg. EU 813/2013)								
PDesign	(4)	kW	6,08	8,24	10,3	13,2	8,49	10,3
SCOP	(4)(13)		3,59	3,35	3,32	3,34	3,62	3,60
Performance ηs	(4)(14)	%	135	126	125	126	137	136
Seasonal efficiency class	(4)		A+	A+	A+	A+	A+	A+
EXCHANGERS								
HEAT EXCHANGER USER SIDE IN REFRIGERATION								
Water flow	(1)	l/s	0,33	0,46	0,56	0,70	0,44	0,56
Available unit's head	(1)	kPa	53,6	56,2	81,1	75,6	57,7	80,5
HEAT EXCHANGER USER SIDE IN HEATING								
Water flow	(3)	l/s	0,26	0,35	0,44	0,56	0,36	0,44
Available unit's head	(3)	kPa	60,6	66,6	94,2	90,0	65,8	94,7
HEAT EXCHANGER SOURCE SIDE IN REFRIGERATION								
Water flow	(1)	l/s	0,44	0,60	0,74	0,93	0,58	0,74
Pressure drop	(1)	kPa	28,4	40,9	60,8	66,5	38,1	60,8
HEAT EXCHANGER SOURCE SIDE IN HEATING								
Water flow	(3)	l/s	0,37	0,50	0,62	0,80	0,52	0,63
Pressure drop	(3)	kPa	19,9	28,3	43,7	50,1	31,4	44,8
REFRIGERANT CIRCUIT								
Compressors nr.		N°	1	1	1	1	1	1
No. Circuits		N°	1	1	1	1	1	1
Refrigerant charge		kg	1,10	1,15	1,24	1,55	1,15	1,24
NOISE LEVEL								
Sound power level in cooling	(5)(6)	dB(A)	52	53	53	58	53	53
Sound power level in heating	(5)(7)	dB(A)	52	53	53	58	53	53
Sound Pressure	(8)	dB(A)	37	38	38	43	38	38
SIZE AND WEIGHT								
A	(9)	mm	845	845	845	845	845	845
B	(9)	mm	680	680	680	680	680	680
H	(9)	mm	1105	1105	1105	1105	1105	1105
Operating weight	(9)	kg	188	190	195	210	190	195

Notes:
1 Plant (side) cooling exchanger water (in/out) 23°C/18°C; Source (side) heat exchanger water (in/out) 30°C/35°C.
2 Values in compliance with EN14511-3:2013.
3 Plant (side) heating exchanger water (in/out) 30°C/35°C; Source (side) heat exchanger water (in/out) 0°C/-3°C (Gly 30%).
4 Seasonal space heating energy efficiency class LOW TEMPERATURE in AVERAGE climate conditions [REGULATION (EU) N. 813/2013]
5 Sound power on the basis of measurements made in compliance with ISO 9614.
6 Sound power level in cooling, indoors.
7 Sound power level in heating, indoors.
8 Average sound pressure level at 1m distance, unit in a free field on a reflective surface; non-binding value calculated from the sound power level.
9 Unit in standard configuration/execution, without optional accessories.
10 Seasonal energy efficiency of the cooling environment [REGULATION (EU) N. 2016/2281]
11 Seasonal space heating energy index
12 Seasonal energy efficiency of the space cooling
13 Seasonal performance coefficient
14 Seasonal space heating energy efficiency
The units highlighted in this publication contain HFC R410A [GWP_{100} 2088] fluorinated greenhouse gases.

APPLICATION FLOOR HEATING - GEOTHERMAL SOURCE

BWR MTD2			0041t	0061t	0071t	0091t	0101t	0121t
Power supply		V/ph/Hz	400/3/50	400/3/50	400/3/50	400/3/50	400/3/50	400/3/50
COOLING ONLY (GROSS VALUE)								
Cooling capacity	(1)	kW	15,3	20,7	26,2	29,9	33,9	43,6
Total power input	(1)	kW	3,41	4,22	5,32	6,13	7,13	8,94
EER	(1)	kW/kW	4,49	4,91	4,92	4,88	4,75	4,88
ESEER	(1)	kW/kW						
COOLING ONLY (EN14511 VALUE)								
Cooling capacity	(1)(2)	kW	15,3	20,7	26,3	30,0	34,1	43,8
EER	(1)(2)	kW/kW	3,60	4,18	4,11	4,21	4,06	4,30
ESEER	(1)(2)	kW/kW	-	-	-	-	-	-
Cooling energy class			G	F	F	F	F	E
HEATING ONLY (GROSS VALUE)								
Total heating capacity	(3)	kW	12,2	15,8	19,6	22,8	26,3	33,1
Total power input	(3)	kW	2,80	3,50	4,40	4,90	5,80	7,30
COP	(3)	kW/kW	4,36	4,51	4,45	4,65	4,53	4,53
HEATING ONLY (EN14511 VALUE)								
Total heating capacity	(3)	kW	12,2	15,8	19,5	22,7	26,1	32,9
COP	(3)	kW/kW	3,36	3,75	3,56	3,85	3,67	3,87
Cooling energy class	(3)		G	F	G	F	G	F
ENERGY EFFICIENCY								
SEASONAL EFFICIENCY IN COOLING (Reg. EU 2016/2281)								
Ambient refrigeration								
Prated,c	(10)	kW	-	-	-	-	-	-
SEER	(10)(11)		-	-	-	-	-	-
Performance ηs	(10)(12)	%	-	-	-	-	-	-
SEASONAL EFFICIENCY IN HEATING (Reg. EU 813/2013)								
PDesign	(4)	kW	13,8	17,9	22,1	25,7	29,6	37,2
SCOP	(4)(13)		3,38	3,76	3,55	3,85	3,70	3,84
Performance ηs	(4)(14)	%	127	143	134	146	140	145
Seasonal efficiency class	(4)		A+	A+	A+	A+	A+	A+
EXCHANGERS								
HEAT EXCHANGER USER SIDE IN REFRIGERATION								
Water flow	(1)	l/s	0,74	0,99	1,26	1,43	1,62	2,09
Available unit's head	(1)	kPa	71,8	62,8	118	110	152	132
HEAT EXCHANGER USER SIDE IN HEATING								
Water flow	(3)	l/s	0,59	0,76	0,94	1,10	1,27	1,59
Available unit's head	(3)	kPa	87,7	84,1	159	151	183	172
HEAT EXCHANGER SOURCE SIDE IN REFRIGERATION								
Water flow	(1)	l/s	0,97	1,29	1,63	1,86	2,12	2,72
Pressure drop	(1)	kPa	72,6	75,7	83,5	70,4	95,2	98,0
HEAT EXCHANGER SOURCE SIDE IN HEATING								
Water flow	(3)	l/s	0,85	1,12	1,38	1,62	1,86	2,34
Pressure drop	(3)	kPa	55,8	57,1	60,0	53,6	73,3	72,6
REFRIGERANT CIRCUIT								
Compressors nr.		N°	1	1	1	1	1	1
No. Circuits		N°	1	1	1	1	1	1
Refrigerant charge		kg	1,55	1,70	2,65	3,10	3,50	3,70
NOISE LEVEL								
Sound power level in cooling	(5)(6)	dB(A)	58	59	66	66	70	70
Sound power level in heating	(5)(7)	dB(A)	58	59	66	66	70	70
Sound Pressure	(8)	dB(A)	43	44	51	51	55	55
SIZE AND WEIGHT								
A	(9)	mm	845	845	845	845	845	845
B	(9)	mm	680	680	680	680	680	680
H	(9)	mm	1105	1105	1105	1105	1105	1105
Operating weight	(9)	kg	210	225	230	245	250	270

Notes:
1 Plant (side) cooling exchanger water (in/out) 23°C/18°C; Source (side) heat exchanger water (in/out) 30°C/35°C.
2 Values in compliance with EN14511-3:2013.
3 Plant (side) heating exchanger water (in/out) 30°C/35°C; Source (side) heat exchanger water (in/out) 0°C/-3°C (Gly 30%).
4 Seasonal space heating energy efficiency class LOW TEMPERATURE in AVERAGE climate conditions [REGULATION (EU) N. 813/2013]
5 Sound power on the basis of measurements made in compliance with ISO 9614.
6 Sound power level in cooling, indoors.
7 Sound power level in heating, indoors.
8 Average sound pressure level at 1m distance, unit in a free field on a reflective surface; non-binding value calculated from the sound power level.
9 Unit in standard configuration/execution, without optional accessories.
10 Seasonal energy efficiency of the cooling environment [REGULATION (EU) N. 2016/2281]
11 Seasonal space heating energy index
12 Seasonal energy efficiency of the space cooling
13 Seasonal performance coefficient
14 Seasonal space heating energy efficiency
The units highlighted in this publication contain HFC R410A [GWP_{100} 2088] fluorinated greenhouse gases.
Certified data in EUROVENT

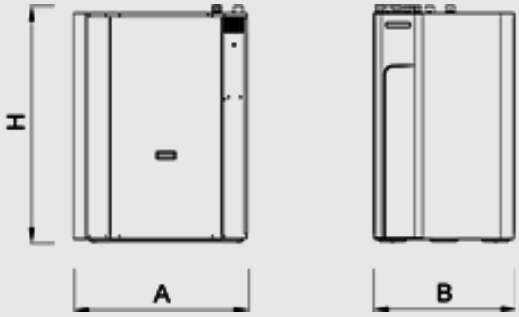
H
A
B

HEAT PUMPS

BW-HT 0071 - 0302

Heat pump only heating for geothermal system, high water temperature 20,3-79,1 kW



BW-HT represent the best solution for systems in which there is the need to produce high water temperature for both space heating and hot water purposes. The units are optimized for geothermal application. The special compressor used guarantees hot water production up to 65°C thanks to a liquid injection system.
The unit BW-HT, heating only, can completely meet any system and application requirements, with a vast range of models, hydronic configurations and accessories. The new BW-HT range is ideal for commercial (offices, hotels), residential (homes, apartments) or industrial installations (domestic hot water production only).

Version

B	Basic

Configurations

-	Basic function

Features

REFRIGERANT GAS R410A

The use of R410A allowed to achive better energy efficiencies with environment full respect (ODP = 0)

ELECTRONIC EXPANSION VALVE SUPPLIED STANDARD

The use of the electronic expansion valve generates considerable benefits, especially in cases of variable demand and different external conditions. It was introduced into these units as a result of accurate design choices concerning the cooling circuit and the optimisation of operation in various different working conditions

EXTENSIVE RANGE OF OPERATION

Production of high temperature hot water up to 65°C for space heating and hot water purposes.

OPTIMIZED FOR GEOTHERMAL SYSTEM

The special compressor used with liquid injection system guarantees hot water production up to 65°C and operating limit down to -5°C source side temperature.

INTEGRATED HYDRONIC MODULE

The units can be supplied with a hydronic kit on the user side and a hydronic kit on the source side. These kits include all the water circuit components so as to optimize installation space, times and costs.
In addition, a vast selection of pumps available, up to 13 different models, for both the user side and the source side, means the best solution can always be configured in terms of flow-rate, available pressure head and power consumption.

RENEWABLE ENERGY FOR COMMERCIAL INSTALLATIONS

Best solution in centralised residential systems such as apartment buildings, where the cost of renovation needs to be limited by keeping the same distribution system with radiators, while offering a source of renewable energy.

MODULAR CONFIGURATION

Modular configuration with capacity extension up to 400kW for medium- and high-capacity installations. Ability of managing different thermal loads according to the requirements of both heating and the domestic hot water systems.

Accessory

- Soft start
- User side and source side hydronic kit (n°13 single pumps and n°13 twin head-pumps available)
- Stackable units
- Water connections can be placed on the right-hand side, top or rear.
- Extra soundproof lining to reduce the noise emissions.
- Outside air temperature probe for plant water set point compensation.
- Three-way valve for domestic hot water
- Set-up for remote connectivity with ModBus/Echelon protocol cards

Controls

Electronic control W3000TE

The W3000TE controller is the new device designed especially for heat pump applications with incorporated logic for high and very high temperature hot water production. The keypad features function controls and a complete LCD display for viewing data and activating the unit, via a multilevel menu, with settable display language. The controller provides temperature control for the heating and cooling systems in the air-conditioned rooms, as well as for domestic hot water. These different temperatures are managed automatically based on the different conditions in which the system operates, with the possibility to assign specific levels of priority to domestic hot water production, depending on the needs of the application. Diagnostics include complete alarm management, with “blackbox” functions (via PC) and alarm log (display or PC) for best analysis of unit be haviour. For systems made up of multiple units, differentiated device management means just a certain portion of the capacity installed can be dedicated to domestic water production, in this way ensuring more efficient energy distribution and, at the same time, guaranteeing simultaneous water delivery to the different distribution systems. The built-in clock can be used to create an operating profile containing up to 4 typical days and 10 time bands, essential for efficient programming of energy production, and fundamental for managing the Legionella prevention cycles.
Supervision is available with different options, using proprietarydevices or by integration into third party systems using ModBus, BACnet, BACnet-over-IP and Echelon LonWorks protocols.
A dedicated wall-mounted keypad can be used for remote control of all the functions.



BW-HT			0071	0091	0101	0121	0131	0151
Power supply		V/ph/Hz	400/3/50	400/3/50	400/3/50	400/3/50	400/3/50	400/3/50
PERFORMANCE								
HEATING ONLY (GROSS VALUE)								
Total heating capacity	(1)	kW	20,3	23,9	27,5	31,1	35,1	39,5
Total power input	(1)	kW	6,34	7,37	8,18	9,12	10,3	11,5
COP		kW/kW	3,20	3,24	3,36	3,41	3,41	3,43
HEATING ONLY (EN14511 VALUE)								
Total heating capacity	(1)(2)	kW	20,3	24,0	27,6	31,2	35,2	39,6
COP	(1)(2)	kW/kW	3,11	3,15	3,26	3,31	3,31	3,34
ENERGY EFFICIENCY								
SEASONAL EFFICIENCY IN HEATING (Reg. EU 813/2013)								
PDesign	(3)	kW	24,2	28,6	33,0	37,3	42,0	47,3
SCOP	(3)(9)		3,89	3,78	4,06	4,15	4,09	4,14
Performance ηs	(3)(10)	%	147	143	155	158	155	158
Seasonal efficiency class	(3)		A+	A+	A++	A++	A++	A++
PDesign	(4)	kW	22,4	26,2	30,2	34,3	38,6	43,4
SCOP	(4)(9)		2,99	3,00	3,13	3,19	3,19	3,21
Performance ηs	(4)(10)	%	112	112	117	120	119	120
Seasonal efficiency class	(4)		A+	A+	A+	A+	A+	A+
EXCHANGERS								
HEAT EXCHANGER USER SIDE IN HEATING								
Water flow	(1)	l/s	0,98	1,15	1,33	1,50	1,69	1,91
Pressure drop	(1)	kPa	6,10	6,22	7,23	7,49	8,20	8,63
HEAT EXCHANGER SOURCE SIDE IN HEATING								
Water flow	(1)	l/s	1,28	1,51	1,77	2,01	2,27	2,55
Pressure drop	(1)	kPa	27,6	28,1	29,5	30,5	30,4	28,5
REFRIGERANT CIRCUIT								
Compressors nr.		N°	1	1	1	1	1	1
No. Circuits		N°	1	1	1	1	1	1
Refrigerant charge		kg	2,70	3,30	3,70	4,20	4,80	5,70
NOISE LEVEL								
Sound Pressure	(5)	dB(A)	51	52	53	54	55	55
Sound power level in heating	(6)(7)	dB(A)	66	67	68	69	70	70
SIZE AND WEIGHT								
A	(8)	mm	1200	1200	1200	1200	1200	1200
B	(8)	mm	600	600	600	600	600	600
H	(8)	mm	855	855	855	855	855	855
Operating weight	(8)	kg	235	245	250	255	265	275

Notes:
1 Plant (side) heating exchanger water (in/out) 40°C/45°C; Source (side) heat exchanger water (in/out) 0°C/-3°C (Gly 30%).
2 Values in compliance with EN14511-3:2013.
3 Seasonal space heating energy efficiency class LOW TEMPERATURE in AVERAGE climate conditions [REGULATION (EU) N. 813/2013]
4 Seasonal space heating energy efficiency class MEDIA TEMPERATURE in AVERAGE climate conditions [REGULATION (EU) N. 813/2013]
5 Average sound pressure level at 1m distance, unit in a free field on a reflective surface; non-binding value calculated from the sound power level.
6 Sound power on the basis of measurements made in compliance with ISO 9614.
7 Sound power level in heating, indoors.
8 Unit in standard configuration/execution, without optional accessories.
9 Seasonal performance coefficient
10 Seasonal space heating energy efficiency
The units highlighted in this publication contain HFC R410A [GWP_{100} 2088] fluorinated greenhouse gases.

BW-HT			0152	0182	0202	0252	0262	0302
Power supply		V/ph/Hz	400/3/50	400/3/50	400/3/50	400/3/50	400/3/50	400/3/50
PERFORMANCE								
HEATING ONLY (GROSS VALUE)								
Total heating capacity	(1)	kW	40,7	47,9	55,2	62,5	70,2	79,1
Total power input	(1)	kW	12,7	14,7	16,3	18,3	20,5	23,0
COP		kW/kW	3,20	3,26	3,39	3,42	3,42	3,44
HEATING ONLY (EN14511 VALUE)								
Total heating capacity	(1)(2)	kW	40,8	48,0	55,4	62,7	70,4	79,3
COP	(1)(2)	kW/kW	3,12	3,18	3,30	3,33	3,34	3,35
ENERGY EFFICIENCY								
SEASONAL EFFICIENCY IN HEATING (Reg. EU 813/2013)								
PDesign	(3)	kW	48,4	57,2	66,0	74,7	84,3	94,6
SCOP	(3)(9)		4,28	4,22	4,49	4,58	4,53	4,57
Performance ηs	(3)(10)	%	163	161	172	175	173	175
Seasonal efficiency class	(3)		A++	A++	A++	A++	-	-
PDesign	(4)	kW	44,9	52,7	60,7	68,7	77,3	86,9
SCOP	(4)(9)		3,35	3,37	3,54	3,59	3,58	3,62
Performance ηs	(4)(10)	%	126	127	133	136	135	137
Seasonal efficiency class	(4)		A++	A++	A++	A++	-	-
EXCHANGERS								
HEAT EXCHANGER USER SIDE IN HEATING								
Water flow	(1)	l/s	1,97	2,31	2,66	3,01	3,39	3,82
Pressure drop	(1)	kPa	9,19	10,7	15,5	15,4	16,1	16,0
HEAT EXCHANGER SOURCE SIDE IN HEATING								
Water flow	(1)	l/s	2,57	3,04	3,55	4,04	4,54	5,12
Pressure drop	(1)	kPa	28,9	24,5	28,1	28,3	29,6	29,7
REFRIGERANT CIRCUIT								
Compressors nr.		N°	2	2	2	2	2	2
No. Circuits		N°	1	1	1	1	1	1
Refrigerant charge		kg	5,70	5,60	6,60	7,60	8,50	9,80
NOISE LEVEL								
Sound Pressure	(5)	dB(A)	56	56	57	57	58	58
Sound power level in heating	(6)(7)	dB(A)	71	71	72	72	73	73
SIZE AND WEIGHT								
A	(8)	mm	1470	1470	1470	1470	1470	1470
B	(8)	mm	885	885	885	885	885	885
H	(8)	mm	900	900	900	900	900	900
Operating weight	(8)	kg	405	435	445	465	475	495

Notes:
1 Plant (side) heating exchanger water (in/out) 40°C/45°C; Source (side) heat exchanger water (in/out) 0°C/-3°C (Gly 30%).
2 Values in compliance with EN14511-3:2013.
3 Seasonal space heating energy efficiency class LOW TEMPERATURE in AVERAGE climate conditions [REGULATION (EU) N. 813/2013]
4 Seasonal space heating energy efficiency class MEDIA TEMPERATURE in AVERAGE climate conditions [REGULATION (EU) N. 813/2013]
5 Average sound pressure level at 1m distance, unit in a free field on a reflective surface; non-binding value calculated from the sound power level.
6 Sound power on the basis of measurements made in compliance with ISO 9614.
7 Sound power level in heating, indoors.
8 Unit in standard configuration/execution, without optional accessories.
9 Seasonal performance coefficient
10 Seasonal space heating energy efficiency
The units highlighted in this publication contain HFC R410A [GWP_{100} 2088] fluorinated greenhouse gases.

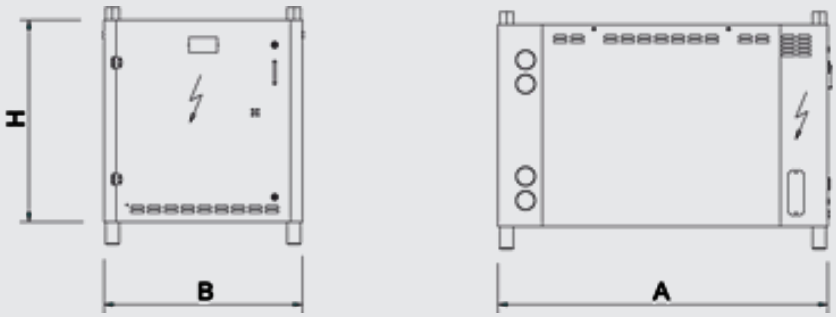

<<< BACK INDEX

NX-Q 0152P - 0602P
NECS-Q 0604 - 1204
NECS-Q 1314 - 3218
ERACS2-Q 1062 - 3222
i-FX-Q2 0502 - 1102
NECS-WQ 0152 - 1204
ERACS2-WQ 0802 - 1502

UNITS FOR SIMULTANEOUS AND INDEPENDENT PRODUCTION OF HOT AND COLD WATER

UNITS FOR SIMULTANEOUS
AND INDEPENDENT PRODUCTION
OF HOT AND COLD WATER

UNITS FOR SIMULTANEOUS AND INDEPENDENT PRODUCTION OF HOT AND COLD WATER

NX-Q 0152P - 0602P

INTEGRA unit for 4-pipe systems, air source for outdoor installation 43,9-169 kW



Multi-purpose outdoor unit for use in 4-pipe systems for the simultaneous production of chilled and hot water by means of two independent hydronic circuits. These units are able to satisfy the demand for hot and cold water simultaneously through a system that does not require seasonal switching and is therefore a valid alternative to traditional plants with chiller and boiler.
Unit with two independent refrigerant circuits, each circuit works with an inverter driven hermetic rotary Scroll compressors using R410A, axial fans, braze-welded plate-type exchanger and thermal expansion valve.

Version

-	Basic
SL	Super-low noise version

Configurations

-	Basic function

Features

UNIQUE PROPOSAL
Unit designed to satisfy the cold and the hot side requirements simultaneously, for 4-pipe systems without any particular operation mode setting
ENERGY SAVING
Energy saving guaranteed by the advanced operation's logic. The best operation mode is set completely automatically and independently by the unit's controller, in order to minimize the absorbed energy whatever the cooling and/or heating demand might be
ErP READY
The highest level of efficiency at part load can meet and exceed the minimum seasonal efficiency for heating, SCOP and for cooling, SEER, according with the eco-sustainable design requirements for all products using energy.
INTEGRATED HYDRONIC GROUP
The built-in hydronic module already contains the main water circuit components; it is available with single or twin in-line pump, for achieving both low or high head, fixed or variable speed, available for both plant and recovery circuits (up to 4 pumps).
WIDE OPERATING RANGE
The accurate condensation control (variable fan speed regulation as per standard on every model) and devoted kits allow unit's operation from -10°C to 46°C of outdoor air temperature, from -8°C to 18°C of evaporator leaving water temperature and hot water up to 55°C.

Accessory

- Touch Screen visual display
- Set-up for remote connectivity with ModBus/Echelon protocol cards
- Hydronic kit available in different configurations with 1 or 2 pumps fixed speed or variable speed, for achieving both low or high head, available for both plant and recovery circuits.
- EC fans with electronic DC brushless motor
- LOW NOISE KIT (only on no silenced versions)
- Soft starters
- Electronic expansion valve

Controls

Electronic control W3000TE
The W3000TE controller offers advanced functions and algorithms.
The LARGE keyboard with a large format and the wide LCD display favour an easy and safe access to the machine setup and a complete view of unit's staus. The assessment and intervention on the unit is managed through a multi-level menu, with selectable user's language. The led icons immediately show the operating status of the circuits, as well as of the fans and of the water pumps (if present). In addition to or as an alternative at Large Keyboard, the KIPlink - Keyboard In Your Pocket - is the innovative user interface based on WiFi technology that allows one to operate on the unit directly from the smartphone or tablet.
The regulation operates on both water circuits featuring the step-wise regulation referred to the return water temperature with proportional logic. This allows to satisfy simultaneously the different requests of both cooling and heating, with no need of mode setting.
The diagnostics comprises a complete alarm management system, with the "black-box" (via PC) and the alarm history display (via display or also PC) for enhanced analysis of the unit operation
Optional proprietary devices can perform the adjustment of the resources in systems made of several units. Consumption metering and performance measurement are possible as well.
Supervision can be easily developed via proprietary devices or the integration in third party systems by means of the most common protocols as ModBus, Bacnet, Bacnet-over-IP, LonWorks.
Compatibility with the remote keyboard (up to 8 units).
The programmable timer manages a weekly schedule organised into time bands to optimise unit performance by minimising power consumption during periods of inactivity. Up to 10 daily time bands can be associated with different operating set points.
The defrosting (air source reversible unit only) follows a proprietary self-adaptive logic, which features the monitoring of several operational parameters. This allows to reduce the number and duration of the defrost cycles, with a benefit for the overall energy efficiency.



NX-Q			0152P	0182P	0202P	0252P	0262P	0302P	0402P	0502P	0602P
Power supply		V/ph/Hz	400/3+N/50	400/3+N/50	400/3+N/50	400/3+N/50	400/3+N/50	400/3+N/50	400/3+N/50	400/3+N/50	400/3+N/50
PERFORMANCE											
COOLING ONLY (GROSS VALUE)											
Cooling capacity	(1)	kW	43,9	50,8	58,1	64,0	71,6	85,5	111	138	169
Total power input	(1)	kW	12,7	14,8	17,6	19,2	22,2	25,6	33,4	42,3	56,5
EER	(1)	kW/kW	3,46	3,43	3,30	3,33	3,23	3,34	3,31	3,26	2,98
COOLING ONLY (EN14511 VALUE)											
Cooling capacity	(1)(2)	kW	43,8	50,6	57,9	63,8	71,4	85,2	110	137	168
EER	(1)(2)	kW/kW	3,41	3,38	3,26	3,28	3,18	3,29	3,27	3,21	2,94
ESEER	(1)(2)	kW/kW	4,17	4,11	4,02	4,15	3,97	4,05	4,03	3,97	3,68
HEATING ONLY (GROSS VALUE)											
Total heating capacity	(3)	kW	46,4	53,2	60,6	67,3	75,2	90,1	115	145	177
Total power input	(3)	kW	13,5	15,3	17,5	19,3	21,4	25,6	32,7	41,3	52,1
COP	(3)	kW/kW	3,44	3,48	3,46	3,49	3,51	3,52	3,52	3,51	3,40
HEATING ONLY (EN14511 VALUE)											
Total heating capacity	(2)(3)	kW	46,6	53,4	60,8	67,6	75,5	90,4	116	145	178
COP	(2)(3)	kW/kW	3,41	3,44	3,43	3,46	3,48	3,49	3,49	3,47	3,37
COOLING WITH TOTAL HEAT RECOVERY											
Cooling capacity	(4)	kW	44,0	51,1	58,9	64,3	73,1	86,9	112	140	176
Total power input	(4)	kW	11,6	13,4	15,7	17,3	19,8	23,4	30,5	39,5	50,7
Recovery heat exchanger capacity	(4)	kW	54,9	63,7	73,7	80,5	91,7	109	141	177	224
TER		kW/kW	8,53	8,57	8,45	8,37	8,32	8,37	8,28	8,01	7,90
ENERGY EFFICIENCY											
SEASONAL EFFICIENCY IN COOLING (Reg. EU 2016/2281)											
Ambient refrigeration											
Prated,c	(11)	kW	-	-	-	-	-	-	-	-	-
SEER	(11)(12)		-	-	-	-	-	-	-	-	-
Performance ηs	(11)(13)	%	-	-	-	-	-	-	-	-	-
SEASONAL EFFICIENCY IN HEATING (Reg. EU 813/2013)											
PDesign	(5)	kW	33,2	38,2	43,6	49,4	55,6	65,8	83,0	106	135
SCOP	(5)(14)		3,59	3,60	3,63	3,75	3,77	3,71	3,69	3,66	3,64
Performance ηs	(5)(15)	%	141	141	142	147	148	145	144	143	143
Seasonal efficiency class	(5)		A+	A+	A+	A+	A+	A+	-	-	-
EXCHANGERS											
HEAT EXCHANGER USER SIDE IN REFRIGERATION											
Water flow	(1)	l/s	2,10	2,43	2,78	3,06	3,42	4,09	5,29	6,59	8,06
Pressure drop	(1)	kPa	14,7	19,7	15,8	19,2	17,1	19,4	22,3	26,2	31,8
HEAT EXCHANGER USER SIDE IN HEATING											
Water flow	(3)	l/s	2,24	2,57	2,93	3,25	3,63	4,35	5,56	6,99	8,56
Pressure drop	(3)	kPa	16,7	21,9	17,5	21,6	19,3	21,9	24,6	29,5	35,9
REFRIGERANT CIRCUIT											
Compressors nr.		N°	2	2	2	2	2	2	2	2	2
No. Circuits		N°	2	2	2	2	2	2	2	2	2
Refrigerant charge		kg	20,8	22,4	22,9	30,2	30,9	37,2	53,2	64,8	66,6
NOISE LEVEL											
Sound Pressure	(6)	dB(A)	53	53	53	53	53	54	55	56	56
Sound power level in cooling	(7)(8)	dB(A)	85	85	85	85	85	86	87	88	88
Sound power level in heating	(7)(9)	dB(A)	85	85	85	85	85	86	87	88	88
SIZE AND WEIGHT											
A	(10)	mm	2625	2625	2625	2625	2625	3250	3875	4500	4500
B	(10)	mm	1350	1350	1350	1350	1350	1350	1350	1350	1350
H	(10)	mm	2070	2070	2070	2070	2070	2070	2070	2070	2070
Operating weight	(10)	kg	850	870	890	960	970	1130	1430	1670	1730

Notes:
1 Plant (side) cooling exchanger water (in/out) 12°C/7°C; Source (side) heat exchanger air (in) 35°C.
2 Values in compliance with EN14511-3:2013.
3 Plant (side) heat exchanger water (in/out) 40°C/45°C; Source (side) heat exchanger air (in) 7°C - 87% R.H.
4 Plant (side) cooling exchanger water (in/out) 12°C/7°C; Plant (side) heat exchanger water (in/out) 40°C/45°C.
5 Seasonal space heating energy efficiency class LOW TEMPERATURE in AVERAGE climate conditions [REGULATION (EU) N. 813/2013]
6 Average sound pressure level at 10m distance, unit in a free field on a reflective surface; non-binding value calculated from the sound power level.
7 Sound power on the basis of measurements made in compliance with ISO 9614.
8 Sound power level in cooling, outdoors.
9 Sound power level in heating, outdoors.
10 Unit in standard configuration/execution, without optional accessories.
11 Seasonal energy efficiency of the cooling environment [REGULATION (EU) N. 2016/2281]
12 Seasonal space heating energy index
13 Seasonal energy efficiency of the space cooling
14 Seasonal performance coefficient
15 Seasonal space heating energy efficiency
The units highlighted in this publication contain HFC R410A [GWP_{100} 2088] fluorinated greenhouse gases.

NX-Q /SL			0152P	0182P	0202P	0252P	0262P	0302P	0402P	0502P
Power supply		V/ph/Hz	400/3+N/50	400/3+N/50	400/3+N/50	400/3+N/50	400/3+N/50	400/3+N/50	400/3+N/50	400/3+N/50
PERFORMANCE										
COOLING ONLY (GROSS VALUE)										
Cooling capacity	(1)	kW	43,2	49,8	58,5	63,2	71,6	84,8	108	131
Total power input	(1)	kW	12,5	14,7	17,3	19,4	22,0	25,5	33,4	44,3
EER	(1)	kW/kW	3,46	3,39	3,38	3,26	3,25	3,33	3,25	2,95
COOLING ONLY (EN14511 VALUE)										
Cooling capacity	(1)(2)	kW	43,1	49,6	58,3	63,0	71,4	84,5	108	130
EER	(1)(2)	kW/kW	3,41	3,33	3,34	3,21	3,21	3,28	3,21	2,91
ESEER	(1)(2)	kW/kW	4,24	4,13	4,14	4,07	4,03	4,06	4,00	3,68
HEATING ONLY (GROSS VALUE)										
Total heating capacity	(3)	kW	46,5	53,3	62,2	67,1	76,8	91,1	116	141
Total power input	(3)	kW	12,9	14,7	17,3	19,1	21,3	25,2	32,3	40,0
COP	(3)	kW/kW	3,60	3,63	3,60	3,51	3,61	3,62	3,60	3,53
HEATING ONLY (EN14511 VALUE)										
Total heating capacity	(2)(3)	kW	46,7	53,5	62,4	67,4	77,1	91,4	117	142
COP	(2)(3)	kW/kW	3,57	3,59	3,56	3,48	3,57	3,58	3,57	3,50
COOLING WITH TOTAL HEAT RECOVERY										
Cooling capacity	(4)	kW	44,0	51,1	58,9	64,3	73,1	86,9	112	140
Total power input	(4)	kW	11,6	13,4	15,7	17,3	19,8	23,4	30,5	39,5
Recovery heat exchanger capacity	(4)	kW	54,9	63,7	73,7	80,5	91,7	109	141	177
TER		kW/kW	8,53	8,57	8,45	8,37	8,32	8,37	8,28	8,01
ENERGY EFFICIENCY										
SEASONAL EFFICIENCY IN COOLING (Reg. EU 2016/2281)										
Ambient refrigeration										
Prated,c	(11)	kW	-	-	-	-	-	-	-	-
SEER	(11)(12)		-	-	-	-	-	-	-	-
Performance ηs	(11)(13)	%	-	-	-	-	-	-	-	-
SEASONAL EFFICIENCY IN HEATING (Reg. EU 813/2013)										
PDesign	(5)	kW	33,2	38,6	45,5	48,9	56,4	66,7	84,3	105
SCOP	(5)(14)		3,81	3,81	3,80	3,78	3,88	3,83	3,82	3,75
Performance ηs	(5)(15)	%	150	150	149	148	152	150	150	147
Seasonal efficiency class	(5)		A++	A++	A+	A+	A++	A++	-	-
EXCHANGERS										
HEAT EXCHANGER USER SIDE IN REFRIGERATION										
Water flow	(1)	l/s	2,07	2,38	2,80	3,02	3,42	4,05	5,19	6,25
Pressure drop	(1)	kPa	14,2	18,9	16,0	18,7	17,1	19,0	21,4	23,6
HEAT EXCHANGER USER SIDE IN HEATING										
Water flow	(3)	l/s	2,25	2,57	3,00	3,24	3,71	4,40	5,62	6,82
Pressure drop	(3)	kPa	16,8	22,1	18,4	21,5	20,1	22,4	25,1	28,0
REFRIGERANT CIRCUIT										
Compressors nr.		N°	2	2	2	2	2	2	2	2
No. Circuits		N°	2	2	2	2	2	2	2	2
Refrigerant charge		kg	27,9	29,5	29,7	29,9	42,0	50,4	63,1	64,8
NOISE LEVEL										
Sound Pressure	(6)	dB(A)	47	47	48	48	48	49	50	52
Sound power level in cooling	(7)(8)	dB(A)	79	79	80	80	80	81	82	84
Sound power level in heating	(7)(9)	dB(A)	79	79	80	80	80	81	82	84
SIZE AND WEIGHT										
A	(10)	mm	2625	2625	3250	3250	3250	3875	4500	4500
B	(10)	mm	1350	1350	1350	1350	1350	1350	1350	1350
H	(10)	mm	2070	2070	2070	2070	2070	2070	2070	2070
Operating weight	(10)	kg	890	910	1000	1030	1090	1270	1610	1680

Notes:
1 Plant (side) cooling exchanger water (in/out) 12°C/7°C; Source (side) heat exchanger air (in) 35°C.
2 Values in compliance with EN14511-3:2013.
3 Plant (side) heat exchanger water (in/out) 40°C/45°C; Source (side) heat exchanger air (in) 7°C - 87% R.H.
4 Plant (side) cooling exchanger water (in/out) 12°C/7°C; Plant (side) heat exchanger water (in/out) 40°C/45°C.
5 Seasonal space heating energy efficiency class LOW TEMPERATURE in AVERAGE climate conditions [REGULATION (EU) N. 813/2013]
6 Average sound pressure level at 10m distance, unit in a free field on a reflective surface; non-binding value calculated from the sound power level.
7 Sound power on the basis of measurements made in compliance with ISO 9614.
8 Sound power level in cooling, outdoors.
9 Sound power level in heating, outdoors.
10 Unit in standard configuration/execution, without optional accessories.
11 Seasonal energy efficiency of the cooling environment [REGULATION (EU) N. 2016/2281]
12 Seasonal space heating energy index
13 Seasonal energy efficiency of the space cooling
14 Seasonal performance coefficient
15 Seasonal space heating energy efficiency
The units highlighted in this publication contain HFC R410A [GWP_{100} 2088] fluorinated greenhouse gases.

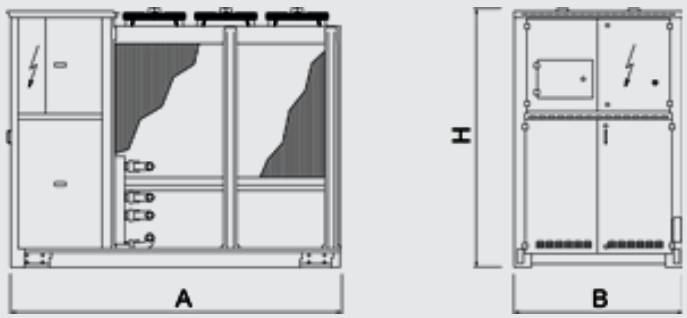

UNITS FOR SIMULTANEOUS AND INDEPENDENT PRODUCTION OF HOT AND COLD WATER

NECS-Q 0604 - 1204

INTEGRA unit for 4-pipe systems, air source for outdoor installation 142-311 kW



Version

B	Basic
LN	Low noise
SL	Super-low noise version

Features

UNIQUE PROPOSAL

Unit designed to satisfy the cold and the hot side requirements simultaneously, for 4-pipe systems without any particular operation mode setting

TOTAL VERSATILITY

Climaveneta is the only company to offer all-in-one units with Scroll compressors in 3 versions designed to satisfy all service system and application requirements

CUTTING-EDGE ELECTRONICS

The Energy Raiser units are fitted with an evolved electronic unit that allows fully automatic management of the best type of operation to meet the load requirements

VENTILATION CONTROL FOR LOW-TEMPERATURE OPERATION

The standard units come fitted with pressure-operated control of ventilation, which allows the unit to produce cold water with an external air temperature down to -10°C

INTEGRATED HYDRONIC GROUP

The built-in hydronic module already contains the main water circuit components; it is available with single or twin in-line pump, for achieving both low or high head, available for both plant and recovery circuits (up to 4 pumps).

Accessory

- Set-up for remote connectivity with ModBus/Echelon protocol cards
- Remote control keyboard (distance to 200m and to 500m)
- Soft starters
- Rubber anti-vibration mounting kit

Multi-purpose outdoor unit for use in 4-pipe systems for the simultaneous production of chilled and hot water by means of two independent hydronic circuits. These units are able to satisfy the demand for hot and cold water simultaneously through a system that does not require seasonal switching and is therefore a valid alternative to traditional plants with chiller and boiler. This unit is equipped with hermetic rotary Scroll compressors, with R410A, axial fans, braze-welded plate-type exchanger and thermal expansion valve. External panels in Peraluman and base in galvanised sheet steel with paint finish. The range includes two-compressor and four-compressor versions, both with two independent refrigerant circuits.

Controls

W3000SE Large

The W3000SE Large controller offers advanced functions and algorithms.
The keypad features an easy-to-use interface and a complete LCD display, allowing to consult and intervene on the unit by means of a multi-level menu, with selectable language setting.
The regulation operates on both water circuits featuring the step-wise regulation referred to the return water temperature with proportional logic. This allows to satisfy simultaneously the different requests of both cooling and heating, with no need of mode setting.
The diagnostics includes a complete alarm management, with the "black-box" and alarm logging functions for enhanced analysis of the unit operation.
For multiple units' systems, the regulation of the resources, via optional proprietary devices, can be implemented. Energy metering, for both consumption and capacity, can also be developed. Supervision can be easily developed via proprietary devices or the integration in third party systems by means of the most common protocols as ModBus, Bacnet, Bacnet-over-IP, Echelon LonWorks.
Compatibility with the remote keyboard managing up to 10 units.
Availability of an internal real time clock for operation scheduling (4-day profiles with 10 hour belts).
The defrost adopts a proprietary self-adaptive logic, which features the monitoring of numerous operational parameters. This allows to reduce the number and duration of the defrost cycles, with a benefit for the overall energy efficiency.



NECS-Q / B			0604	0704	0804	0904	1004	1104	1204
Power supply		V/ph/Hz	400/3/50	400/3/50	400/3/50	400/3/50	400/3/50	400/3/50	400/3/50
PERFORMANCE									
COOLING ONLY (GROSS VALUE)									
Cooling capacity	(1)	kW	150	166	189	211	240	277	311
Total power input	(1)	kW	58,9	69,0	75,8	85,2	95,6	107	120
EER	(1)	kW/kW	2,54	2,41	2,49	2,48	2,51	2,58	2,58
COOLING ONLY (EN14511 VALUE)									
Cooling capacity	(1)(2)	kW	149	166	188	210	239	276	310
EER	(1)(2)	kW/kW	2,50	2,37	2,45	2,44	2,48	2,54	2,54
ESEER	(1)(2)	kW/kW	-	-	-	-	-	-	-
HEATING ONLY (GROSS VALUE)									
Total heating capacity	(3)	kW	167	185	209	234	266	306	344
Total power input	(3)	kW	58,0	64,9	72,1	79,8	92,0	104	116
COP	(3)	kW/kW	2,88	2,86	2,90	2,93	2,90	2,94	2,96
HEATING ONLY (EN14511 VALUE)									
Total heating capacity	(2)(3)	kW	168	186	210	235	268	308	346
COP	(2)(3)	kW/kW	2,86	2,83	2,87	2,91	2,87	2,91	2,93
COOLING WITH TOTAL HEAT RECOVERY									
Cooling capacity	(4)	kW	151	173	194	220	246	280	317
Total power input	(4)	kW	49,8	57,1	64,5	72,1	79,8	92,8	105
Recovery heat exchanger capacity	(4)	kW	198	226	255	288	321	368	415
TER		kW/kW	7,00	6,99	6,96	7,04	7,10	6,98	6,99
ENERGY EFFICIENCY									
SEASONAL EFFICIENCY IN COOLING (Reg. EU 2016/2281)									
Ambient refrigeration									
Prated,c	(11)	kW	-	-	-	-	-	-	-
SEER	(11)(12)		-	-	-	-	-	-	-
Performance ηs	(11)(13)	%	-	-	-	-	-	-	-
SEASONAL EFFICIENCY IN HEATING (Reg. EU 813/2013)									
PDesign	(5)	kW	127	143	157	172	205	231	255
SCOP	(5)(14)		3,25	3,24	3,34	3,20	3,21	3,27	3,25
Performance ηs	(5)(15)	%	127	127	131	125	125	128	127
Seasonal efficiency class	(5)		-	-	-	-	-	-	-
EXCHANGERS									
HEAT EXCHANGER USER SIDE IN REFRIGERATION									
Water flow	(1)	l/s	7,17	7,95	9,03	10,09	11,48	13,25	14,86
Pressure drop	(1)	kPa	41,9	43,0	43,7	42,8	44,4	47,3	47,2
HEAT EXCHANGER USER SIDE IN HEATING									
Water flow	(3)	l/s	8,07	8,95	10,10	11,30	12,86	14,79	16,60
Pressure drop	(3)	kPa	56,9	59,2	61,4	61,9	66,5	65,7	67,5
REFRIGERANT CIRCUIT									
Compressors nr.		N°	4	4	4	4	4	4	4
No. Circuits		N°	2	2	2	2	2	2	2
Refrigerant charge		kg	41,0	42,0	56,0	61,0	63,0	80,0	108
NOISE LEVEL									
Sound Pressure	(6)	dB(A)	60	60	60	61	62	63	63
Sound power level in cooling	(7)(8)	dB(A)	92	92	92	93	94	95	95
Sound power level in heating	(7)(9)	dB(A)	92	92	92	93	94	95	95
SIZE AND WEIGHT									
A	(10)	mm	3110	3110	3110	4110	4110	4110	4110
B	(10)	mm	2220	2220	2220	2220	2220	2220	2220
H	(10)	mm	2150	2150	2150	2150	2150	2150	2150
Operating weight	(10)	kg	1600	1840	2120	2320	2480	2680	2860

Notes:
1 Plant (side) cooling exchanger water (in/out) 12°C/7°C; Source (side) heat exchanger air (in) 35°C.
2 Values in compliance with EN14511-3:2013.
3 Plant (side) heat exchanger water (in/out) 40°C/45°C; Source (side) heat exchanger air (in) 7°C - 87% R.H.
4 Plant (side) cooling exchanger water (in/out) 12°C/7°C; Plant (side) heat exchanger water (in/out) 40°C/45°C.
5 Seasonal space heating energy efficiency class LOW TEMPERATURE in AVERAGE climate conditions [REGULATION (EU) N. 813/2013]
6 Average sound pressure level at 10m distance, unit in a free field on a reflective surface; non-binding value calculated from the sound power level.
7 Sound power on the basis of measurements made in compliance with ISO 9614.
8 Sound power level in cooling, outdoors.
9 Sound power level in heating, outdoors.
10 Unit in standard configuration/execution, without optional accessories.
11 Seasonal energy efficiency of the cooling environment [REGULATION (EU) N. 2016/2281]
12 Seasonal space heating energy index
13 Seasonal energy efficiency of the space cooling
14 Seasonal performance coefficient
15 Seasonal space heating energy efficiency
The units highlighted in this publication contain HFC R410A [GWP_{100} 2088] fluorinated greenhouse gases.

NECS-Q / LN			0604	0704	0804	0904	1004	1104	1204
Power supply		V/ph/Hz	400/3/50	400/3/50	400/3/50	400/3/50	400/3/50	400/3/50	400/3/50
PERFORMANCE									
COOLING ONLY (GROSS VALUE)									
Cooling capacity	(1)	kW	143	157	177	199	227	261	291
Total power input	(1)	kW	58,8	70,2	78,4	87,8	96,5	110	125
EER	(1)	kW/kW	2,43	2,24	2,26	2,27	2,36	2,37	2,32
COOLING ONLY (EN14511 VALUE)									
Cooling capacity	(1)(2)	kW	142	156	176	198	226	260	290
EER	(1)(2)	kW/kW	2,40	2,21	2,23	2,24	2,33	2,34	2,29
ESEER	(1)(2)	kW/kW	-	-	-	-	-	-	-
HEATING ONLY (GROSS VALUE)									
Total heating capacity	(3)	kW	160	176	198	225	254	290	324
Total power input	(3)	kW	54,0	60,8	67,9	75,7	85,8	97,9	110
COP	(3)	kW/kW	2,95	2,89	2,92	2,98	2,95	2,96	2,94
HEATING ONLY (EN14511 VALUE)									
Total heating capacity	(2)(3)	kW	160	177	199	226	255	292	326
COP	(2)(3)	kW/kW	2,92	2,87	2,89	2,95	2,93	2,94	2,91
COOLING WITH TOTAL HEAT RECOVERY									
Cooling capacity	(4)	kW	151	173	194	220	246	280	317
Total power input	(4)	kW	49,8	57,1	64,5	72,1	79,8	92,8	105
Recovery heat exchanger capacity	(4)	kW	198	226	255	288	321	368	415
TER		kW/kW	7,00	6,99	6,96	7,04	7,10	6,98	6,99
ENERGY EFFICIENCY									
SEASONAL EFFICIENCY IN COOLING (Reg. EU 2016/2281)									
Ambient refrigeration									
Prated,c	(11)	kW	-	-	-	-	-	-	-
SEER	(11)(12)		-	-	-	-	-	-	-
Performance ηs	(11)(13)	%	-	-	-	-	-	-	-
SEASONAL EFFICIENCY IN HEATING (Reg. EU 813/2013)									
PDesign	(5)	kW	117	128	154	144	186	229	255
SCOP	(5)(14)		3,33	3,34	3,41	3,37	3,34	3,48	3,49
Performance ηs	(5)(15)	%	130	131	134	132	130	136	136
Seasonal efficiency class	(5)		-	-	-	-	-	-	-
EXCHANGERS									
HEAT EXCHANGER USER SIDE IN REFRIGERATION									
Water flow	(1)	l/s	6,84	7,51	8,47	9,52	10,87	12,47	13,90
Pressure drop	(1)	kPa	38,2	38,4	38,5	38,1	39,8	41,9	41,3
HEAT EXCHANGER USER SIDE IN HEATING									
Water flow	(3)	l/s	7,70	8,50	9,56	10,88	12,24	14,01	15,63
Pressure drop	(3)	kPa	51,8	53,3	54,9	57,4	60,2	59,0	59,9
REFRIGERANT CIRCUIT									
Compressors nr.		N°	4	4	4	4	4	4	4
No. Circuits		N°	2	2	2	2	2	2	2
Refrigerant charge		kg	41,0	42,0	56,0	61,0	63,0	80,0	108
NOISE LEVEL									
Sound Pressure	(6)	dB(A)	54	54	54	55	56	57	57
Sound power level in cooling	(7)(8)	dB(A)	86	86	86	87	88	89	89
Sound power level in heating	(7)(9)	dB(A)	87	87	87	88	89	90	90
SIZE AND WEIGHT									
A	(10)	mm	3110	3110	3110	4110	4110	4110	4110
B	(10)	mm	2220	2220	2220	2220	2220	2220	2220
H	(10)	mm	2150	2150	2150	2150	2150	2150	2150
Operating weight	(10)	kg	1600	1840	2120	2320	2480	2680	2860

Notes:
1 Plant (side) cooling exchanger water (in/out) 12°C/7°C; Source (side) heat exchanger air (in) 35°C.
2 Values in compliance with EN14511-3:2013.
3 Plant (side) heat exchanger water (in/out) 40°C/45°C; Source (side) heat exchanger air (in) 7°C - 87% R.H.
4 Plant (side) cooling exchanger water (in/out) 12°C/7°C; Plant (side) heat exchanger water (in/out) 40°C/45°C.
5 Seasonal space heating energy efficiency class LOW TEMPERATURE in AVERAGE climate conditions [REGULATION (EU) N. 813/2013]
6 Average sound pressure level at 10m distance, unit in a free field on a reflective surface; non-binding value calculated from the sound power level.
7 Sound power on the basis of measurements made in compliance with ISO 9614.
8 Sound power level in cooling, outdoors.
9 Sound power level in heating, outdoors.
10 Unit in standard configuration/execution, without optional accessories.
11 Seasonal energy efficiency of the cooling environment [REGULATION (EU) N. 2016/2281]
12 Seasonal space heating energy index
13 Seasonal energy efficiency of the space cooling
14 Seasonal performance coefficient
15 Seasonal space heating energy efficiency
The units highlighted in this publication contain HFC R410A [GWP_{100} 2088] fluorinated greenhouse gases.

NECS-Q / SL			0604	0704	0804	0904	1004	1104	1204
Power supply		V/ph/Hz	400/3/50	400/3/50	400/3/50	400/3/50	400/3/50	400/3/50	400/3/50
PERFORMANCE									
COOLING ONLY (GROSS VALUE)									
Cooling capacity	(1)	kW	142	160	183	201	225	261	294
Total power input	(1)	kW	58,0	67,4	75,4	87,3	95,5	108	123
EER	(1)	kW/kW	2,45	2,37	2,43	2,30	2,36	2,41	2,38
COOLING ONLY (EN14511 VALUE)									
Cooling capacity	(1)(2)	kW	141	159	183	200	224	260	293
EER	(1)(2)	kW/kW	2,41	2,34	2,40	2,27	2,33	2,38	2,35
ESEER	(1)(2)	kW/kW	-	-	-	-	-	-	-
HEATING ONLY (GROSS VALUE)									
Total heating capacity	(3)	kW	159	178	205	226	253	295	330
Total power input	(3)	kW	52,6	59,5	68,7	76,1	83,8	96,1	110
COP	(3)	kW/kW	3,02	2,99	2,99	2,97	3,02	3,06	3,00
HEATING ONLY (EN14511 VALUE)									
Total heating capacity	(2)(3)	kW	160	179	206	227	254	296	332
COP	(2)(3)	kW/kW	2,99	2,96	2,96	2,94	2,99	3,03	2,97
COOLING WITH TOTAL HEAT RECOVERY									
Cooling capacity	(4)	kW	151	173	194	220	246	280	317
Total power input	(4)	kW	49,8	57,1	64,5	72,1	79,8	92,8	105
Recovery heat exchanger capacity	(4)	kW	198	226	255	288	321	368	415
TER		kW/kW	7,00	6,99	6,96	7,04	7,10	6,98	6,99
ENERGY EFFICIENCY									
SEASONAL EFFICIENCY IN COOLING (Reg. EU 2016/2281)									
Ambient refrigeration									
Prated,c	(11)	kW	-	-	-	-	-	-	-
SEER	(11)(12)		-	-	-	-	-	-	-
Performance ηs	(11)(13)	%	-	-	-	-	-	-	-
SEASONAL EFFICIENCY IN HEATING (Reg. EU 813/2013)									
PDesign	(5)	kW	125	141	137	149	200	229	257
SCOP	(5)(14)		3,72	3,76	3,48	3,50	3,72	3,84	3,71
Performance ηs	(5)(15)	%	146	148	136	137	146	151	145
Seasonal efficiency class	(5)		-	-	-	-	-	-	-
EXCHANGERS									
HEAT EXCHANGER USER SIDE IN REFRIGERATION									
Water flow	(1)	l/s	6,79	7,64	8,77	9,60	10,77	12,47	14,05
Pressure drop	(1)	kPa	37,6	39,7	41,3	38,7	39,1	41,9	42,2
HEAT EXCHANGER USER SIDE IN HEATING									
Water flow	(3)	l/s	7,67	8,59	9,91	10,93	12,21	14,22	15,93
Pressure drop	(3)	kPa	51,5	54,5	59,0	57,9	59,9	60,8	62,1
REFRIGERANT CIRCUIT									
Compressors nr.		N°	4	4	4	4	4	4	4
No. Circuits		N°	2	2	2	2	2	2	2
Refrigerant charge		kg	55,0	67,0	60,0	61,0	78,0	110	112
NOISE LEVEL									
Sound Pressure	(6)	dB(A)	50	50	51	51	51	53	54
Sound power level in cooling	(7)(8)	dB(A)	82	82	83	83	83	85	86
Sound power level in heating	(7)(9)	dB(A)	83	83	84	84	84	86	87
SIZE AND WEIGHT									
A	(10)	mm	3110	3110	4110	4110	4110	5110	5110
B	(10)	mm	2220	2220	2220	2220	2220	2220	2220
H	(10)	mm	2150	2150	2150	2150	2150	2150	2150
Operating weight	(10)	kg	1700	1960	2350	2420	2590	2950	3100

Notes:
1 Plant (side) cooling exchanger water (in/out) 12°C/7°C; Source (side) heat exchanger air (in) 35°C.
2 Values in compliance with EN14511-3:2013.
3 Plant (side) heat exchanger water (in/out) 40°C/45°C; Source (side) heat exchanger air (in) 7°C - 87% R.H.
4 Plant (side) cooling exchanger water (in/out) 12°C/7°C; Plant (side) heat exchanger water (in/out) 40°C/45°C.
5 Seasonal space heating energy efficiency class LOW TEMPERATURE in AVERAGE climate conditions [REGULATION (EU) N. 813/2013]
6 Average sound pressure level at 10m distance, unit in a free field on a reflective surface; non-binding value calculated from the sound power level.
7 Sound power on the basis of measurements made in compliance with ISO 9614.
8 Sound power level in cooling, outdoors.
9 Sound power level in heating, outdoors.
10 Unit in standard configuration/execution, without optional accessories.
11 Seasonal energy efficiency of the cooling environment [REGULATION (EU) N. 2016/2281]
12 Seasonal space heating energy index
13 Seasonal energy efficiency of the space cooling
14 Seasonal performance coefficient
15 Seasonal space heating energy efficiency
The units highlighted in this publication contain HFC R410A [GWP_{100} 2088] fluorinated greenhouse gases.



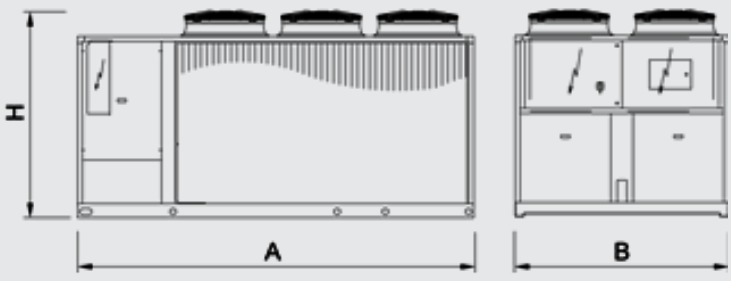

UNITS FOR SIMULTANEOUS AND INDEPENDENT PRODUCTION OF HOT AND COLD WATER

NECS-Q 1314 - 3218

INTEGRA unit for 4-pipe systems, air source for outdoor installation 332-850 kW



Multi-purpose outdoor unit for use in 4-pipe systems for the simultaneous production of chilled and hot water by means of two independent hydronic circuits. These units are able to satisfy the demand for hot and cold water simultaneously through a system that does not require seasonal switching and is therefore a valid alternative to traditional plants with chiller and boiler. This unit is equipped with hermetic rotary Scroll compressors, with R410A, axial fans, shell and tube heat exchangers and electronic expansion valve. The range is composed by units equipped with four, six and eight compressors in multi-circuit configuration.

Version

B	Basic
CA	Class A of efficiency
SL-CA	Super Low noise version, Class A of efficiency

Features

REFRIGERANT GAS R410A

The use of R410A allowed to achive better energy efficiencies with environment full respect (ODP = 0)

UNIQUE PROPOSAL

Unit designed to satisfy the cold and the hot side requirements simultaneously, for 4-pipe systems without any particular operation mode setting

ENERGY SAVING

Energy saving guaranteed by the advanced operation's logic. The best operation mode is set completely automatically and independently by the unit's controller, in order to minimize the absorbed energy whatever the cooling and/or heating demand might be

CLASS A EFFICIENCY

The full range is also available with the Class A efficiency rating (in heating). NECS-Q/CA and NECS-Q/SL-CA guaranty premium levels of efficiency thanks to the generous sizing of the refrigerant-exchange surface areas and to an accurate control of the fans, available on both standard and low-noise versions.

INTEGRATED HYDRONIC GROUP

The built-in hydronic module already contains the main water circuit components; it is available with single or twin in-line pump, for achieving low or high head, available for both hot and cold water distribution systems (up to 4 pumps).

Accessory

- Remote control keyboard (distance to 200m and to 500m)
- Soft starters
- Set-up for remote connectivity with ModBus, Echelon LonTalk, Bacnet protocol board
- LT kit for extending the operating limits in heat pump mode down to -10 °C (/SL-CA versions) and -12 °C (/CA versions)

Controls

W3000SE Large

The W3000SE Large controller offers advanced functions and algorithms.

The keypad features an easy-to-use interface and a complete LCD display, allowing to consult and intervene on the unit by means of a multi-level menu, with selectable language setting.

The regulation operates on both water circuits featuring the step-wise regulation referred to the return water temperature with proportional logic. This allows to satisfy simultaneously the different requests of both cooling and heating, with no need of mode setting.

The diagnostics includes a complete alarm management, with the "black-box" and alarm logging functions for enhanced analysis of the unit operation.

For multiple units' systems, the regulation of the resources, via optional proprietary devices, can be implemented. Energy metering, for both consumption and capacity, can also be developed. Supervision can be easily developed via proprietary devices or the integration in third party systems by means of the most common protocols as ModBus, Bacnet, Bacnet-over-IP, Echelon LonWorks.

Compatibility with the remote keyboard managing up to 10 units.

Availability of an internal real time clock for operation scheduling (4-day profiles with 10 hour belts).

The defrost adopts a proprietary self-adaptive logic, which features the monitoring of numerous operational parameters. This allows to reduce the number and duration of the defrost cycles, with a benefit for the overall energy efficiency.



NECS-Q / B			1314	1414	1614	1716	1816	2016	2116
Power supply		V/ph/Hz	400/3/50	400/3/50	400/3/50	400/3/50	400/3/50	400/3/50	400/3/50
PERFORMANCE									
COOLING ONLY (GROSS VALUE)									
Cooling capacity	(1)	kW	353	377	412	452	496	546	567
Total power input	(1)	kW	125	131	150	163	176	189	196
EER	(1)	kW/kW	2,81	2,89	2,75	2,77	2,82	2,89	2,89
COOLING ONLY (EN14511 VALUE)									
Cooling capacity	(1)(2)	kW	351	376	410	450	494	544	565
EER	(1)(2)	kW/kW	2,77	2,84	2,70	2,74	2,78	2,86	2,85
ESEER	(1)(2)	kW/kW	-	-	-	-	-	-	-
HEATING ONLY (GROSS VALUE)									
Total heating capacity	(3)	kW	380	408	447	485	528	587	612
Total power input	(3)	kW	121	129	141	156	169	186	192
COP	(3)	kW/kW	3,13	3,18	3,16	3,11	3,12	3,16	3,18
HEATING ONLY (EN14511 VALUE)									
Total heating capacity	(2)(3)	kW	382	410	449	486	530	589	615
COP	(2)(3)	kW/kW	3,10	3,15	3,12	3,09	3,09	3,14	3,16
COOLING WITH TOTAL HEAT RECOVERY									
Cooling capacity	(4)	kW	355	379	423	460	500	547	568
Total power input	(4)	kW	107	113	126	139	150	163	170
Recovery heat exchanger capacity	(4)	kW	455	485	542	590	640	700	728
TER		kW/kW	7,55	7,66	7,64	7,55	7,63	7,67	7,64
ENERGY EFFICIENCY									
SEASONAL EFFICIENCY IN COOLING (Reg. EU 2016/2281)									
Ambient refrigeration									
Prated,c	(11)	kW	-	-	-	-	-	544	565
SEER	(11)(12)		-	-	-	-	-	4,13	4,15
Performance ηs	(11)(13)	%	-	-	-	-	-	162	163
SEASONAL EFFICIENCY IN HEATING (Reg. EU 813/2013)									
PDesign	(5)	kW	280	318	367	383	396	-	-
SCOP	(5)(14)		3,57	3,66	3,54	3,70	3,60	-	-
Performance ηs	(5)(15)	%	140	143	139	145	141	-	-
Seasonal efficiency class	(5)		-	-	-	-	-	-	-
EXCHANGERS									
HEAT EXCHANGER USER SIDE IN REFRIGERATION									
Water flow	(1)	l/s	16,86	18,05	19,69	21,61	23,73	26,11	27,13
Pressure drop	(1)	kPa	53,4	46,9	55,8	38,1	46,0	42,4	45,8
HEAT EXCHANGER USER SIDE IN HEATING									
Water flow	(3)	l/s	18,36	19,70	21,56	23,40	25,46	28,32	29,56
Pressure drop	(3)	kPa	63,4	55,8	66,9	44,7	52,9	49,9	54,3
REFRIGERANT CIRCUIT									
Compressors nr.		N°	4	4	4	6	6	6	6
No. Circuits		N°	2	2	2	3	3	3	3
Refrigerant charge		kg	86,0	92,0	92,0	106	119	132	139
NOISE LEVEL									
Sound Pressure	(6)	dB(A)	64	64	64	64	65	65	65
Sound power level in cooling	(7)(8)	dB(A)	96	96	96	96	97	97	97
Sound power level in heating	(7)(9)	dB(A)	96	96	96	96	97	0	0
SIZE AND WEIGHT									
A	(10)	mm	3905	3905	3905	4515	5690	5690	5690
B	(10)	mm	2260	2260	2260	2260	2260	2260	2260
H	(10)	mm	2450	2450	2450	2450	2450	2450	2450
Operating weight	(10)	kg	3530	3620	3650	4850	5240	5370	5430

Notes:
1 Plant (side) cooling exchanger water (in/out) 12°C/7°C; Source (side) heat exchanger air (in) 35°C.
2 Values in compliance with EN14511-3:2013.
3 Plant (side) heat exchanger water (in/out) 40°C/45°C; Source (side) heat exchanger air (in) 7°C - 87% R.H.
4 Plant (side) cooling exchanger water (in/out) 12°C/7°C; Plant (side) heat exchanger water (in/out) 40°C/45°C.
5 Seasonal space heating energy efficiency class LOW TEMPERATURE in AVERAGE climate conditions [REGULATION (EU) N. 813/2013]
6 Average sound pressure level at 10m distance, unit in a free field on a reflective surface; non-binding value calculated from the sound power level.
7 Sound power on the basis of measurements made in compliance with ISO 9614.
8 Sound power level in cooling, outdoors.
9 Sound power level in heating, outdoors.
10 Unit in standard configuration/execution, without optional accessories.
11 Seasonal energy efficiency of the cooling environment [REGULATION (EU) N. 2016/2281]
12 Seasonal space heating energy index
13 Seasonal energy efficiency of the space cooling
14 Seasonal performance coefficient
15 Seasonal space heating energy efficiency
The units highlighted in this publication contain HFC R410A [GWP_{100} 2088] fluorinated greenhouse gases.

NECS-Q / CA			1314	1414	1614	1716	1816	2016	2116
Power supply		V/ph/Hz	400/3/50	400/3/50	400/3/50	400/3/50	400/3/50	400/3/50	400/3/50
PERFORMANCE									
COOLING ONLY (GROSS VALUE)									
Cooling capacity	(1)	kW	362	387	425	471	524	559	581
Total power input	(1)	kW	122	128	145	157	173	185	192
EER	(1)	kW/kW	2,96	3,03	2,94	3,01	3,04	3,03	3,03
COOLING ONLY (EN14511 VALUE)									
Cooling capacity	(1)(2)	kW	361	385	423	470	522	557	579
EER	(1)(2)	kW/kW	2,91	2,98	2,89	2,97	2,99	2,99	2,99
ESEER	(1)(2)	kW/kW	-	-	-	-	-	-	-
HEATING ONLY (GROSS VALUE)									
Total heating capacity	(3)	kW	394	420	462	507	546	603	630
Total power input	(3)	kW	120	127	140	155	166	183	189
COP	(3)	kW/kW	3,30	3,31	3,30	3,28	3,29	3,30	3,32
HEATING ONLY (EN14511 VALUE)									
Total heating capacity	(2)(3)	kW	396	422	464	509	549	606	633
COP	(2)(3)	kW/kW	3,26	3,28	3,26	3,25	3,26	3,27	3,29
COOLING WITH TOTAL HEAT RECOVERY									
Cooling capacity	(4)	kW	355	379	423	460	500	547	568
Total power input	(4)	kW	107	113	126	139	150	163	170
Recovery heat exchanger capacity	(4)	kW	455	485	542	590	640	700	728
TER		kW/kW	7,55	7,66	7,64	7,55	7,63	7,67	7,64
ENERGY EFFICIENCY									
SEASONAL EFFICIENCY IN COOLING (Reg. EU 2016/2281)									
Ambient refrigeration									
Prated,c	(11)	kW	-	-	-	-	-	557	579
SEER	(11)(12)		-	-	-	-	-	4,26	4,22
Performance ηs	(11)(13)	%	-	-	-	-	-	167	166
SEASONAL EFFICIENCY IN HEATING (Reg. EU 813/2013)									
PDesign	(5)	kW	283	317	363	376	390	-	-
SCOP	(5)(14)		3,75	3,86	3,73	3,86	3,77	-	-
Performance ηs	(5)(15)	%	147	151	146	152	148	-	-
Seasonal efficiency class	(5)		-	-	-	-	-	-	-
EXCHANGERS									
HEAT EXCHANGER USER SIDE IN REFRIGERATION									
Water flow	(1)	l/s	17,32	18,49	20,32	22,54	25,06	26,74	27,80
Pressure drop	(1)	kPa	56,4	49,2	59,4	41,5	51,3	44,5	48,1
HEAT EXCHANGER USER SIDE IN HEATING									
Water flow	(3)	l/s	19,02	20,27	22,30	24,48	26,38	29,12	30,41
Pressure drop	(3)	kPa	68,0	59,1	71,5	48,9	56,8	52,7	57,5
REFRIGERANT CIRCUIT									
Compressors nr.		N°	4	4	4	6	6	6	6
No. Circuits		N°	2	2	2	3	3	3	3
Refrigerant charge		kg	99,0	106	106	139	139	152	158
NOISE LEVEL									
Sound Pressure	(6)	dB(A)	65	65	65	64	65	65	65
Sound power level in cooling	(7)(8)	dB(A)	97	97	97	97	98	98	98
Sound power level in heating	(7)(9)	dB(A)	97	97	97	97	98	0	0
SIZE AND WEIGHT									
A	(10)	mm	5080	5080	5080	6255	7430	7430	7430
B	(10)	mm	2260	2260	2260	2260	2260	2260	2260
H	(10)	mm	2450	2450	2450	2450	2450	2450	2450
Operating weight	(10)	kg	3850	3950	3980	5460	5740	5890	5970

Notes:
1 Plant (side) cooling exchanger water (in/out) 12°C/7°C; Source (side) heat exchanger air (in) 35°C.
2 Values in compliance with EN14511-3:2013.
3 Plant (side) heat exchanger water (in/out) 40°C/45°C; Source (side) heat exchanger air (in) 7°C - 87% R.H.
4 Plant (side) cooling exchanger water (in/out) 12°C/7°C; Plant (side) heat exchanger water (in/out) 40°C/45°C.
5 Seasonal space heating energy efficiency class LOW TEMPERATURE in AVERAGE climate conditions [REGULATION (EU) N. 813/2013]
6 Average sound pressure level at 10m distance, unit in a free field on a reflective surface; non-binding value calculated from the sound power level.
7 Sound power on the basis of measurements made in compliance with ISO 9614.
8 Sound power level in cooling, outdoors.
9 Sound power level in heating, outdoors.
10 Unit in standard configuration/execution, without optional accessories.
11 Seasonal energy efficiency of the cooling environment [REGULATION (EU) N. 2016/2281]
12 Seasonal space heating energy index
13 Seasonal energy efficiency of the space cooling
14 Seasonal performance coefficient
15 Seasonal space heating energy efficiency
The units highlighted in this publication contain HFC R410A [GWP_{100} 2088] fluorinated greenhouse gases.

NECS-Q / CA			2416	2418	2618	2818	3018	3218
Power supply		V/ph/Hz	400/3/50	400/3/50	400/3/50	400/3/50	400/3/50	400/3/50
PERFORMANCE								
COOLING ONLY (GROSS VALUE)								
Cooling capacity	(1)	kW	637	680	724	775	813	850
Total power input	(1)	kW	217	230	244	256	272	289
EER	(1)	kW/kW	2,94	2,95	2,96	3,03	2,99	2,94
COOLING ONLY (EN14511 VALUE)								
Cooling capacity	(1)(2)	kW	635	677	720	773	810	846
EER	(1)(2)	kW/kW	2,89	2,91	2,91	2,99	2,94	2,89
ESEER	(1)(2)	kW/kW	-	-	-	-	-	-
HEATING ONLY (GROSS VALUE)								
Total heating capacity	(3)	kW	693	729	788	840	882	924
Total power input	(3)	kW	210	221	239	253	266	280
COP	(3)	kW/kW	3,30	3,29	3,29	3,33	3,31	3,30
HEATING ONLY (EN14511 VALUE)								
Total heating capacity	(2)(3)	kW	696	732	792	843	886	928
COP	(2)(3)	kW/kW	3,27	3,26	3,26	3,30	3,28	3,27
COOLING WITH TOTAL HEAT RECOVERY								
Cooling capacity	(4)	kW	636	667	711	758	802	848
Total power input	(4)	kW	189	200	213	226	240	252
Recovery heat exchanger capacity	(4)	kW	814	854	911	971	1027	1085
TER		kW/kW	7,68	7,62	7,61	7,63	7,63	7,67
ENERGY EFFICIENCY								
SEASONAL EFFICIENCY IN COOLING (Reg. EU 2016/2281)								
Ambient refrigeration								
Prated,c	(11)	kW	635	677	720	773	810	846
SEER	(11)(12)		4,16	4,10	4,13	4,24	4,23	4,14
Performance ηs	(11)(13)	%	164	161	162	167	166	163
SEASONAL EFFICIENCY IN HEATING (Reg. EU 813/2013)								
PDesign	(5)	kW	-	-	-	-	-	-
SCOP	(5)(14)		-	-	-	-	-	-
Performance ηs	(5)(15)	%	-	-	-	-	-	-
Seasonal efficiency class	(5)		-	-	-	-	-	-
EXCHANGERS								
HEAT EXCHANGER USER SIDE IN REFRIGERATION								
Water flow	(1)	l/s	30,46	32,51	34,60	37,07	38,87	40,63
Pressure drop	(1)	kPa	49,3	50,7	57,4	44,5	48,9	53,5
HEAT EXCHANGER USER SIDE IN HEATING								
Water flow	(3)	l/s	33,44	35,18	38,05	40,54	42,57	44,60
Pressure drop	(3)	kPa	59,4	59,3	69,4	53,3	58,7	64,4
REFRIGERANT CIRCUIT								
Compressors nr.		N°	6	8	8	8	8	8
No. Circuits		N°	3	4	4	4	4	4
Refrigerant charge		kg	158	185	198	211	211	211
NOISE LEVEL								
Sound Pressure	(6)	dB(A)	66	66	66	67	67	67
Sound power level in cooling	(7)(8)	dB(A)	99	99	99	100	100	100
Sound power level in heating	(7)(9)	dB(A)	0	0	0	0	0	0
SIZE AND WEIGHT								
A	(10)	mm	7430	9780	9780	9780	9780	9780
B	(10)	mm	2260	2260	2260	2260	2260	2260
H	(10)	mm	2450	2450	2450	2450	2450	2450
Operating weight	(10)	kg	6020	7350	7500	7700	7740	7770

Notes:
1 Plant (side) cooling exchanger water (in/out) 12°C/7°C; Source (side) heat exchanger air (in) 35°C.
2 Values in compliance with EN14511-3:2013.
3 Plant (side) heat exchanger water (in/out) 40°C/45°C; Source (side) heat exchanger air (in) 7°C - 87% R.H.
4 Plant (side) cooling exchanger water (in/out) 12°C/7°C; Plant (side) heat exchanger water (in/out) 40°C/45°C.
5 Seasonal space heating energy efficiency class LOW TEMPERATURE in AVERAGE climate conditions [REGULATION (EU) N. 813/2013]
6 Average sound pressure level at 10m distance, unit in a free field on a reflective surface; non-binding value calculated from the sound power level.
7 Sound power on the basis of measurements made in compliance with ISO 9614.
8 Sound power level in cooling, outdoors.
9 Sound power level in heating, outdoors.
10 Unit in standard configuration/execution, without optional accessories.
11 Seasonal energy efficiency of the cooling environment [REGULATION (EU) N. 2016/2281]
12 Seasonal space heating energy index
13 Seasonal energy efficiency of the space cooling
14 Seasonal performance coefficient
15 Seasonal space heating energy efficiency
The units highlighted in this publication contain HFC R410A [GWP_{100} 2088] fluorinated greenhouse gases.

NECS-Q / SL-CA			1314	1414	1614	1716	1816	2016	2116
Power supply		V/ph/Hz	400/3/50	400/3/50	400/3/50	400/3/50	400/3/50	400/3/50	400/3/50
PERFORMANCE									
COOLING ONLY (GROSS VALUE)									
Cooling capacity	(1)	kW	332	357	398	429	462	512	536
Total power input	(1)	kW	130	137	153	169	183	198	205
EER	(1)	kW/kW	2,56	2,61	2,60	2,54	2,52	2,59	2,61
COOLING ONLY (EN14511 VALUE)									
Cooling capacity	(1)(2)	kW	331	355	396	428	460	511	534
EER	(1)(2)	kW/kW	2,52	2,57	2,56	2,51	2,49	2,56	2,58
ESEER	(1)(2)	kW/kW	-	-	-	-	-	-	-
HEATING ONLY (GROSS VALUE)									
Total heating capacity	(3)	kW	378	400	453	486	526	578	601
Total power input	(3)	kW	116	124	138	151	163	178	186
COP	(3)	kW/kW	3,25	3,23	3,29	3,22	3,23	3,25	3,23
HEATING ONLY (EN14511 VALUE)									
Total heating capacity	(2)(3)	kW	380	402	455	488	528	580	603
COP	(2)(3)	kW/kW	3,21	3,19	3,25	3,20	3,20	3,22	3,20
COOLING WITH TOTAL HEAT RECOVERY									
Cooling capacity	(4)	kW	355	379	423	460	500	547	568
Total power input	(4)	kW	107	113	126	139	150	163	170
Recovery heat exchanger capacity	(4)	kW	455	485	542	590	640	700	728
TER		kW/kW	7,55	7,66	7,64	7,55	7,63	7,67	7,64
ENERGY EFFICIENCY									
SEASONAL EFFICIENCY IN COOLING (Reg. EU 2016/2281)									
Ambient refrigeration									
Prated,c	(11)	kW	-	-	-	-	-	-	-
SEER	(11)(12)		-	-	-	-	-	-	-
Performance ηs	(11)(13)	%	-	-	-	-	-	-	-
SEASONAL EFFICIENCY IN HEATING (Reg. EU 813/2013)									
PDesign	(5)	kW	225	260	359	288	399	360	388
SCOP	(5)(14)		3,65	3,69	3,77	3,67	3,90	3,73	3,70
Performance ηs	(5)(15)	%	143	145	148	144	153	146	145
Seasonal efficiency class	(5)		-	-	-	-	-	-	-
EXCHANGERS									
HEAT EXCHANGER USER SIDE IN REFRIGERATION									
Water flow	(1)	l/s	15,88	17,05	19,02	20,50	22,08	24,49	25,62
Pressure drop	(1)	kPa	47,4	41,8	52,0	34,3	39,8	37,3	40,8
HEAT EXCHANGER USER SIDE IN HEATING									
Water flow	(3)	l/s	18,23	19,32	21,87	23,47	25,37	27,91	28,99
Pressure drop	(3)	kPa	62,4	53,7	68,8	45,0	52,6	48,5	52,3
REFRIGERANT CIRCUIT									
Compressors nr.		N°	4	4	4	6	6	6	6
No. Circuits		N°	2	2	2	3	3	3	3
Refrigerant charge		kg	92,0	92,0	106	125	139	139	139
NOISE LEVEL									
Sound Pressure	(6)	dB(A)	56	56	56	57	57	57	57
Sound power level in cooling	(7)(8)	dB(A)	88	88	88	89	89	90	90
Sound power level in heating	(7)(9)	dB(A)	89	89	89	90	90	91	91
SIZE AND WEIGHT									
A	(10)	mm	4515	5080	5080	5690	5690	6865	7430
B	(10)	mm	2260	2260	2260	2260	2260	2260	2260
H	(10)	mm	2450	2450	2450	2450	2450	2450	2450
Operating weight	(10)	kg	3760	3900	4050	5350	5490	5780	5890

Notes:
1 Plant (side) cooling exchanger water (in/out) 12°C/7°C; Source (side) heat exchanger air (in) 35°C.
2 Values in compliance with EN14511-3:2013.
3 Plant (side) heat exchanger water (in/out) 40°C/45°C; Source (side) heat exchanger air (in) 7°C - 87% R.H.
4 Plant (side) cooling exchanger water (in/out) 12°C/7°C; Plant (side) heat exchanger water (in/out) 40°C/45°C.
5 Seasonal space heating energy efficiency class LOW TEMPERATURE in AVERAGE climate conditions [REGULATION (EU) N. 813/2013]
6 Average sound pressure level at 10m distance, unit in a free field on a reflective surface; non-binding value calculated from the sound power level.
7 Sound power on the basis of measurements made in compliance with ISO 9614.
8 Sound power level in cooling, outdoors.
9 Sound power level in heating, outdoors.
10 Unit in standard configuration/execution, without optional accessories.
11 Seasonal energy efficiency of the cooling environment [REGULATION (EU) N. 2016/2281]
12 Seasonal space heating energy index
13 Seasonal energy efficiency of the space cooling
14 Seasonal performance coefficient
15 Seasonal space heating energy efficiency
The units highlighted in this publication contain HFC R410A [GWP_{100} 2088] fluorinated greenhouse gases.

NECS-Q / SL-CA			2416	2418	2618	2818	3018	3218
Power supply		V/ph/Hz	400/3/50	400/3/50	400/3/50	400/3/50	400/3/50	400/3/50
PERFORMANCE								
COOLING ONLY (GROSS VALUE)								
Cooling capacity	(1)	kW	596	616	663	714	754	795
Total power input	(1)	kW	229	244	260	274	290	306
EER	(1)	kW/kW	2,60	2,52	2,55	2,61	2,60	2,60
COOLING ONLY (EN14511 VALUE)								
Cooling capacity	(1)(2)	kW	594	614	661	712	752	792
EER	(1)(2)	kW/kW	2,57	2,49	2,52	2,58	2,57	2,57
ESEER	(1)(2)	kW/kW	-	-	-	-	-	-
HEATING ONLY (GROSS VALUE)								
Total heating capacity	(3)	kW	679	701	755	801	859	906
Total power input	(3)	kW	207	217	233	248	262	276
COP	(3)	kW/kW	3,28	3,23	3,24	3,23	3,28	3,28
HEATING ONLY (EN14511 VALUE)								
Total heating capacity	(2)(3)	kW	682	704	758	804	863	910
COP	(2)(3)	kW/kW	3,25	3,20	3,21	3,21	3,25	3,25
COOLING WITH TOTAL HEAT RECOVERY								
Cooling capacity	(4)	kW	636	667	711	758	802	848
Total power input	(4)	kW	189	200	213	226	240	252
Recovery heat exchanger capacity	(4)	kW	814	854	911	971	1027	1085
TER		kW/kW	7,68	7,62	7,61	7,63	7,63	7,67
ENERGY EFFICIENCY								
SEASONAL EFFICIENCY IN COOLING (Reg. EU 2016/2281)								
Ambient refrigeration								
Prated,c	(11)	kW	594	614	661	712	752	792
SEER	(11)(12)		4,12	4,13	4,20	4,25	4,24	4,14
Performance ηs	(11)(13)	%	162	162	165	167	167	163
SEASONAL EFFICIENCY IN HEATING (Reg. EU 813/2013)								
PDesign	(5)	kW	-	-	-	-	-	-
SCOP	(5)(14)		-	-	-	-	-	-
Performance ηs	(5)(15)	%	-	-	-	-	-	-
Seasonal efficiency class	(5)		-	-	-	-	-	-
EXCHANGERS								
HEAT EXCHANGER USER SIDE IN REFRIGERATION								
Water flow	(1)	l/s	28,51	29,47	31,72	34,17	36,08	38,02
Pressure drop	(1)	kPa	43,2	41,7	48,3	37,8	42,2	46,8
HEAT EXCHANGER USER SIDE IN HEATING								
Water flow	(3)	l/s	32,80	33,84	36,44	38,65	41,48	43,73
Pressure drop	(3)	kPa	57,2	54,9	63,7	48,4	55,7	62,0
REFRIGERANT CIRCUIT								
Compressors nr.		N°	6	8	8	8	8	8
No. Circuits		N°	3	4	4	4	4	4
Refrigerant charge		kg	158	185	185	185	198	211
NOISE LEVEL								
Sound Pressure	(6)	dB(A)	58	58	58	59	59	59
Sound power level in cooling	(7)(8)	dB(A)	91	91	91	92	92	92
Sound power level in heating	(7)(9)	dB(A)	0	0	0	0	0	0
SIZE AND WEIGHT								
A	(10)	mm	7430	7430	8605	9780	9780	9780
B	(10)	mm	2260	2260	2260	2260	2260	2260
H	(10)	mm	2450	2450	2450	2450	2450	2450
Operating weight	(10)	kg	6130	7020	7330	7600	7750	7910

Notes:
1 Plant (side) cooling exchanger water (in/out) 12°C/7°C; Source (side) heat exchanger air (in) 35°C.
2 Values in compliance with EN14511-3:2013.
3 Plant (side) heat exchanger water (in/out) 40°C/45°C; Source (side) heat exchanger air (in) 7°C - 87% R.H.
4 Plant (side) cooling exchanger water (in/out) 12°C/7°C; Plant (side) heat exchanger water (in/out) 40°C/45°C.
5 Seasonal space heating energy efficiency class LOW TEMPERATURE in AVERAGE climate conditions [REGULATION (EU) N. 813/2013]
6 Average sound pressure level at 10m distance, unit in a free field on a reflective surface; non-binding value calculated from the sound power level.
7 Sound power on the basis of measurements made in compliance with ISO 9614.
8 Sound power level in cooling, outdoors.
9 Sound power level in heating, outdoors.
10 Unit in standard configuration/execution, without optional accessories.
11 Seasonal energy efficiency of the cooling environment [REGULATION (EU) N. 2016/2281]
12 Seasonal space heating energy index
13 Seasonal energy efficiency of the space cooling
14 Seasonal performance coefficient
15 Seasonal space heating energy efficiency
The units highlighted in this publication contain HFC R410A [GWP_{100} 2088] fluorinated greenhouse gases.

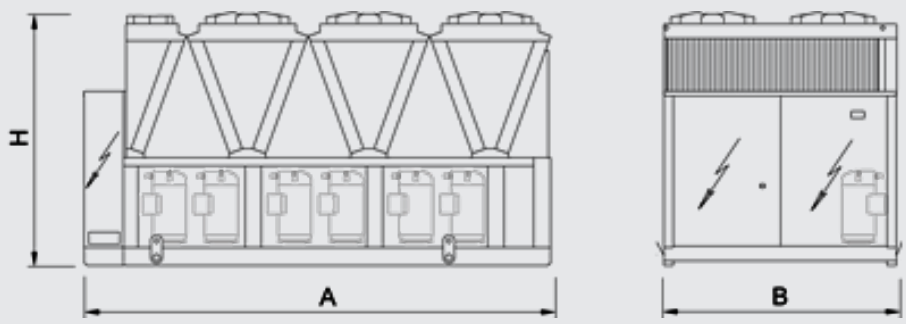

UNITS FOR SIMULTANEOUS AND INDEPENDENT PRODUCTION OF HOT AND COLD WATER

ERACS2-Q 1062 - 3222

INTEGRA unit for 4-pipe systems, air source for outdoor installation 199-826 kW



Version

CA	Class A of efficiency
LN-CA	Low Noise, Class A of efficiency
SL-CA	Super Low noise version, Class A of efficiency
XL-CA	eXtra Low noise version, Class A of efficiency
XL-CA-E	eXtra Low noise, Class A enhanced

Features

UNIQUE PROPOSAL

Unit designed to satisfy the cold and the hot side requirements simultaneously, for 4-pipe systems without any particular operation mode setting

ENERGY SAVING

Energy saving guaranteed by the advanced operation's logic. The best operation mode is set completely automatically and independently by the unit's controller, in order to minimize the absorbed energy whatever the cooling and/or heating demand might be

WIDE OPERATING RANGE

Unit´s operation guaranteed with external air temperature down to -10 °C during winter and up to 46 °C during summer.

VERSION ´XL-CA-E´ AVAILABLE

Exclusive Premium version. Together for the first time, the lowest noise level on the market and the maximum efficiency in each operating mode.

HOT WATER SUPPLY

Supply of hot water in use up to 55°C, offering maximum versatility with respect to different plant engineering solutions

Accessory

- Hydronic group
- VPF (Variable Primary Flow) kit: variable flow pumps with on board regulation
- Electronic expansion valve
- Set-up for remote connectivity with ModBus/Echelon protocol cards

Multi-purpose outdoor unit for use in 4-pipe systems for the simultaneous production of chilled and hot water by means of two independent hydronic circuits.
These units are able to satisfy the demand for hot and cold water simultaneously through a system that does not require seasonal switching and is therefore a valid alternative to traditional plants with chiller and boiler. Each circuit works with a semi-hermetic screw compressor using R134a, two shell and tubes heat exchangers shared by both circuits, a cold heat exchanger on plant's side that acts as an evaporator in the production of cold water, a heat exchanger on plant's side that works as a condenser in the production of hot water, and a source side coil heat exchanger that works as either condenser or evaporator as required by the loads.

Controls

W3000SE Large

The controller W3000 large offers the latest control and functions specially developed for these units.
The keypad is generously sized with full operating status display. The controls and detailed LCD make access to machine settings easy and safe. These resources permit to diirectly act on the unit settings through a multilevel menu, available in several languages.
The diagnostics includes full management of alarms with black-box functions and alarm record for better analysis of unit performance.
For multi-units plants a special device to coordinate and manage all the resources is available as an option; energy metering device is even possible as an option. Supervision is easy through Climaveneta devices or with various options for interfacing to ModBus, Bacnet, Echelon LonTalk protocols.
Compatibility with remote keyboard (management up to 10 units). Clock available with programming of operation (standard 4 days and 10 time bands).
Temperature regulation managed on the two water circuits, with a proportional logic referred to the return water temperatures. This allows to satisfy simultaneously the different heating- and cooling requests, with no need of mode changeover.
Exclusive self-adaptive defrost logic, monitoring multiple operational- and ambient parameters, which allows to reduce the number and duration of the defrost cycles, with a benefit for the overall energy efficiency.



ERACS2-Q / CA			1062	1162	1362	1562	1762	1962
Power supply		V/ph/Hz	400/3/50	400/3/50	400/3/50	400/3/50	400/3/50	400/3/50
PERFORMANCE								
COOLING ONLY (GROSS VALUE)								
Cooling capacity	(1)	kW	210	248	302	329	380	425
Total power input	(1)	kW	72,1	84,8	101	109	129	144
EER	(1)	kW/kW	2,91	2,93	2,98	3,01	2,95	2,95
COOLING ONLY (EN14511 VALUE)								
Cooling capacity	(1)(2)	kW	209	247	301	328	379	424
EER	(1)(2)	kW/kW	2,88	2,89	2,94	2,97	2,91	2,92
ESEER	(1)(2)	kW/kW	-	-	-	-	-	-
HEATING ONLY (GROSS VALUE)								
Total heating capacity	(3)	kW	218	258	308	339	396	434
Total power input	(3)	kW	67,0	80,7	92,2	101	122	131
COP	(3)	kW/kW	3,25	3,20	3,35	3,35	3,25	3,32
HEATING ONLY (EN14511 VALUE)								
Total heating capacity	(2)(3)	kW	218	259	310	340	397	435
COP	(2)(3)	kW/kW	3,23	3,17	3,32	3,32	3,23	3,31
COOLING WITH TOTAL HEAT RECOVERY								
Cooling capacity	(4)	kW	209	248	305	329	381	428
Total power input	(4)	kW	60,6	72,2	87,1	92,5	111	122
Recovery heat exchanger capacity	(4)	kW	266	316	386	416	486	542
TER		kW/kW	7,83	7,81	7,93	8,06	7,80	7,97
ENERGY EFFICIENCY								
SEASONAL EFFICIENCY IN COOLING (Reg. EU 2016/2281)								
Ambient refrigeration								
Prated,c	(11)	kW	-	-	-	-	-	-
SEER	(11)(12)		-	-	-	-	-	-
Performance ηs	(11)(13)	%	-	-	-	-	-	-
SEASONAL EFFICIENCY IN HEATING (Reg. EU 813/2013)								
PDesign	(5)	kW	155	210	219	241	282	311
SCOP	(5)(14)		3,41	3,21	3,45	3,53	3,40	3,54
Performance ηs	(5)(15)	%	133	125	135	138	133	139
Seasonal efficiency class	(5)		-	-	-	-	-	-
EXCHANGERS								
HEAT EXCHANGER USER SIDE IN REFRIGERATION								
Water flow	(1)	l/s	10,04	11,88	14,46	15,75	18,19	20,33
Pressure drop	(1)	kPa	28,8	40,2	36,6	43,4	40,3	27,9
HEAT EXCHANGER USER SIDE IN HEATING								
Water flow	(3)	l/s	10,51	12,47	14,89	16,37	19,10	20,95
Pressure drop	(3)	kPa	31,5	44,3	38,8	46,9	44,4	29,6
REFRIGERANT CIRCUIT								
Compressors nr.		N°	2	2	2	2	2	2
No. Circuits		N°	2	2	2	2	2	2
Refrigerant charge		kg	83,0	97,0	132	132	160	167
NOISE LEVEL								
Sound Pressure	(6)	dB(A)	65	65	65	66	66	66
Sound power level in cooling	(7)(8)	dB(A)	97	97	97	98	99	99
Sound power level in heating	(7)(9)	dB(A)	97	97	97	98	99	99
SIZE AND WEIGHT								
A	(10)	mm	4610	4610	5610	5610	6610	6610
B	(10)	mm	2220	2220	2220	2220	2220	2220
H	(10)	mm	2150	2420	2430	2430	2430	2430
Operating weight	(10)	kg	3600	3870	4620	5040	5520	5670

Notes:
1 Plant (side) cooling exchanger water (in/out) 12°C/7°C; Source (side) heat exchanger air (in) 35°C.
2 Values in compliance with EN14511-3:2013.
3 Plant (side) heat exchanger water (in/out) 40°C/45°C; Source (side) heat exchanger air (in) 7°C - 87% R.H.
4 Plant (side) cooling exchanger water (in/out) 12°C/7°C; Plant (side) heat exchanger water (in/out) 40°C/45°C.
5 Seasonal space heating energy efficiency class LOW TEMPERATURE in AVERAGE climate conditions [REGULATION (EU) N. 813/2013]
6 Average sound pressure level at 10m distance, unit in a free field on a reflective surface; non-binding value calculated from the sound power level.
7 Sound power on the basis of measurements made in compliance with ISO 9614.
8 Sound power level in cooling, outdoors.
9 Sound power level in heating, outdoors.
10 Unit in standard configuration/execution, without optional accessories.
11 Seasonal energy efficiency of the cooling environment [REGULATION (EU) N. 2016/2281]
12 Seasonal space heating energy index
13 Seasonal energy efficiency of the space cooling
14 Seasonal performance coefficient
15 Seasonal space heating energy efficiency
The units highlighted in this publication contain HFC R134a [GWP_{100} 1430] fluorinated greenhouse gases.

ERACS2-Q / CA			2022	2222	2422	2622	2722	3222
Power supply		V/ph/Hz	400/3/50	400/3/50	400/3/50	400/3/50	400/3/50	400/3/50
PERFORMANCE								
COOLING ONLY (GROSS VALUE)								
Cooling capacity	(1)	kW	483	525	554	624	701	826
Total power input	(1)	kW	156	167	176	201	222	264
EER	(1)	kW/kW	3,10	3,14	3,16	3,10	3,15	3,13
COOLING ONLY (EN14511 VALUE)								
Cooling capacity	(1)(2)	kW	482	524	552	623	700	824
EER	(1)(2)	kW/kW	3,07	3,11	3,12	3,08	3,12	3,10
ESEER	(1)(2)	kW/kW	-	-	-	-	-	-
HEATING ONLY (GROSS VALUE)								
Total heating capacity	(3)	kW	492	541	571	615	711	826
Total power input	(3)	kW	149	159	169	178	207	240
COP	(3)	kW/kW	3,31	3,41	3,38	3,46	3,43	3,44
HEATING ONLY (EN14511 VALUE)								
Total heating capacity	(2)(3)	kW	493	543	572	616	713	828
COP	(2)(3)	kW/kW	3,29	3,38	3,36	3,44	3,41	3,42
COOLING WITH TOTAL HEAT RECOVERY								
Cooling capacity	(4)	kW	484	522	550	631	701	826
Total power input	(4)	kW	134	145	153	170	193	228
Recovery heat exchanger capacity	(4)	kW	609	658	694	791	883	1041
TER		kW/kW	8,18	8,14	8,12	8,35	8,19	8,17
ENERGY EFFICIENCY								
SEASONAL EFFICIENCY IN COOLING (Reg. EU 2016/2281)								
Ambient refrigeration								
Prated,c	(11)	kW	-	-	-	-	700	824
SEER	(11)(12)		-	-	-	-	4,17	4,20
Performance ηs	(11)(13)	%	-	-	-	-	164	165
SEASONAL EFFICIENCY IN HEATING (Reg. EU 813/2013)								
PDesign	(5)	kW	359	387	353	398	-	-
SCOP	(5)(14)		3,48	3,60	3,60	3,61	-	-
Performance ηs	(5)(15)	%	136	141	141	141	-	-
Seasonal efficiency class	(5)		-	-	-	-	-	-
EXCHANGERS								
HEAT EXCHANGER USER SIDE IN REFRIGERATION								
Water flow	(1)	l/s	23,09	25,11	26,49	29,84	33,54	39,48
Pressure drop	(1)	kPa	26,7	29,0	32,3	23,1	30,5	30,9
HEAT EXCHANGER USER SIDE IN HEATING								
Water flow	(3)	l/s	23,75	26,13	27,55	29,67	34,34	39,85
Pressure drop	(3)	kPa	28,2	31,4	34,9	22,8	31,9	31,5
REFRIGERANT CIRCUIT								
Compressors nr.		N°	2	2	2	2	2	2
No. Circuits		N°	2	2	2	2	2	2
Refrigerant charge		kg	210	240	250	254	312	360
NOISE LEVEL								
Sound Pressure	(6)	dB(A)	66	68	68	68	68	69
Sound power level in cooling	(7)(8)	dB(A)	99	101	101	101	101	102
Sound power level in heating	(7)(9)	dB(A)	99	101	0	0	0	0
SIZE AND WEIGHT								
A	(10)	mm	6300	7200	7200	7200	8400	9700
B	(10)	mm	2260	2260	2260	2260	2260	2260
H	(10)	mm	2350	2350	2350	2350	2350	2350
Operating weight	(10)	kg	7580	8060	8160	8600	9160	11380

Notes:
1 Plant (side) cooling exchanger water (in/out) 12°C/7°C; Source (side) heat exchanger air (in) 35°C.
2 Values in compliance with EN14511-3:2013.
3 Plant (side) heat exchanger water (in/out) 40°C/45°C; Source (side) heat exchanger air (in) 7°C - 87% R.H.
4 Plant (side) cooling exchanger water (in/out) 12°C/7°C; Plant (side) heat exchanger water (in/out) 40°C/45°C.
5 Seasonal space heating energy efficiency class LOW TEMPERATURE in AVERAGE climate conditions [REGULATION (EU) N. 813/2013]
6 Average sound pressure level at 10m distance, unit in a free field on a reflective surface; non-binding value calculated from the sound power level.
7 Sound power on the basis of measurements made in compliance with ISO 9614.
8 Sound power level in cooling, outdoors.
9 Sound power level in heating, outdoors.
10 Unit in standard configuration/execution, without optional accessories.
11 Seasonal energy efficiency of the cooling environment [REGULATION (EU) N. 2016/2281]
12 Seasonal space heating energy index
13 Seasonal energy efficiency of the space cooling
14 Seasonal performance coefficient
15 Seasonal space heating energy efficiency
The units highlighted in this publication contain HFC R134a [GWP_{100} 1430] fluorinated greenhouse gases.

ERACS2-Q / LN-CA			1062	1162	1362	1562	1762	1962
Power supply		V/ph/Hz	400/3/50	400/3/50	400/3/50	400/3/50	400/3/50	400/3/50
PERFORMANCE								
COOLING ONLY (GROSS VALUE)								
Cooling capacity	(1)	kW	205	241	294	322	369	414
Total power input	(1)	kW	70,8	84,6	103	109	130	144
EER	(1)	kW/kW	2,89	2,85	2,86	2,96	2,83	2,87
COOLING ONLY (EN14511 VALUE)								
Cooling capacity	(1)(2)	kW	204	240	293	321	368	413
EER	(1)(2)	kW/kW	2,86	2,81	2,82	2,92	2,80	2,85
ESEER	(1)(2)	kW/kW	-	-	-	-	-	-
HEATING ONLY (GROSS VALUE)								
Total heating capacity	(3)	kW	218	258	308	339	396	434
Total power input	(3)	kW	67,0	80,7	92,2	101	122	131
COP	(3)	kW/kW	3,25	3,20	3,35	3,35	3,25	3,32
HEATING ONLY (EN14511 VALUE)								
Total heating capacity	(2)(3)	kW	218	259	310	340	397	435
COP	(2)(3)	kW/kW	3,23	3,17	3,32	3,32	3,23	3,31
COOLING WITH TOTAL HEAT RECOVERY								
Cooling capacity	(4)	kW	209	248	305	329	381	428
Total power input	(4)	kW	60,6	72,2	87,1	92,5	111	122
Recovery heat exchanger capacity	(4)	kW	266	316	386	416	486	542
TER		kW/kW	7,83	7,81	7,93	8,06	7,80	7,97
ENERGY EFFICIENCY								
SEASONAL EFFICIENCY IN COOLING (Reg. EU 2016/2281)								
Ambient refrigeration								
Prated,c	(11)	kW	-	-	-	-	-	-
SEER	(11)(12)		-	-	-	-	-	-
Performance ηs	(11)(13)	%	-	-	-	-	-	-
SEASONAL EFFICIENCY IN HEATING (Reg. EU 813/2013)								
PDesign	(5)	kW	155	210	219	241	282	311
SCOP	(5)(14)		3,41	3,21	3,45	3,53	3,40	3,54
Performance ηs	(5)(15)	%	133	125	135	138	133	139
Seasonal efficiency class	(5)		-	-	-	-	-	-
EXCHANGERS								
HEAT EXCHANGER USER SIDE IN REFRIGERATION								
Water flow	(1)	l/s	9,80	11,52	14,05	15,39	17,66	19,78
Pressure drop	(1)	kPa	27,4	37,9	34,5	41,4	38,0	26,4
HEAT EXCHANGER USER SIDE IN HEATING								
Water flow	(3)	l/s	10,51	12,47	14,89	16,37	19,10	20,95
Pressure drop	(3)	kPa	31,5	44,3	38,8	46,9	44,4	29,6
REFRIGERANT CIRCUIT								
Compressors nr.		N°	2	2	2	2	2	2
No. Circuits		N°	2	2	2	2	2	2
Refrigerant charge		kg	83,0	97,0	132	132	160	167
NOISE LEVEL								
Sound Pressure	(6)	dB(A)	58	59	59	60	59	59
Sound power level in cooling	(7)(8)	dB(A)	90	91	91	92	92	92
Sound power level in heating	(7)(9)	dB(A)	91	92	92	93	93	93
SIZE AND WEIGHT								
A	(10)	mm	4610	4610	5610	5610	6610	6610
B	(10)	mm	2220	2220	2220	2220	2220	2220
H	(10)	mm	2150	2420	2430	2430	2430	2430
Operating weight	(10)	kg	3600	3870	4620	5040	5520	5670

Notes:
1 Plant (side) cooling exchanger water (in/out) 12°C/7°C; Source (side) heat exchanger air (in) 35°C.
2 Values in compliance with EN14511-3:2013.
3 Plant (side) heat exchanger water (in/out) 40°C/45°C; Source (side) heat exchanger air (in) 7°C - 87% R.H.
4 Plant (side) cooling exchanger water (in/out) 12°C/7°C; Plant (side) heat exchanger water (in/out) 40°C/45°C.
5 Seasonal space heating energy efficiency class LOW TEMPERATURE in AVERAGE climate conditions [REGULATION (EU) N. 813/2013]
6 Average sound pressure level at 10m distance, unit in a free field on a reflective surface; non-binding value calculated from the sound power level.
7 Sound power on the basis of measurements made in compliance with ISO 9614.
8 Sound power level in cooling, outdoors.
9 Sound power level in heating, outdoors.
10 Unit in standard configuration/execution, without optional accessories.
11 Seasonal energy efficiency of the cooling environment [REGULATION (EU) N. 2016/2281]
12 Seasonal space heating energy index
13 Seasonal energy efficiency of the space cooling
14 Seasonal performance coefficient
15 Seasonal space heating energy efficiency
The units highlighted in this publication contain HFC R134a [GWP_{100} 1430] fluorinated greenhouse gases.

ERACS2-Q / LN-CA			2022	2222	2422	2622	2722	3222
Power supply		V/ph/Hz	400/3/50	400/3/50	400/3/50	400/3/50	400/3/50	400/3/50
PERFORMANCE								
COOLING ONLY (GROSS VALUE)								
Cooling capacity	(1)	kW	469	513	541	604	684	799
Total power input	(1)	kW	163	168	177	206	225	274
EER	(1)	kW/kW	2,88	3,06	3,05	2,93	3,03	2,91
COOLING ONLY (EN14511 VALUE)								
Cooling capacity	(1)(2)	kW	468	512	540	603	682	798
EER	(1)(2)	kW/kW	2,86	3,03	3,02	2,91	3,01	2,89
ESEER	(1)(2)	kW/kW	-	-	-	-	-	-
HEATING ONLY (GROSS VALUE)								
Total heating capacity	(3)	kW	492	541	571	615	711	826
Total power input	(3)	kW	149	159	169	178	207	240
COP	(3)	kW/kW	3,31	3,41	3,38	3,46	3,43	3,44
HEATING ONLY (EN14511 VALUE)								
Total heating capacity	(2)(3)	kW	493	543	572	616	713	828
COP	(2)(3)	kW/kW	3,29	3,38	3,36	3,44	3,41	3,42
COOLING WITH TOTAL HEAT RECOVERY								
Cooling capacity	(4)	kW	484	522	550	631	701	826
Total power input	(4)	kW	134	145	153	170	193	228
Recovery heat exchanger capacity	(4)	kW	609	658	694	791	883	1041
TER		kW/kW	8,18	8,14	8,12	8,35	8,19	8,17
ENERGY EFFICIENCY								
SEASONAL EFFICIENCY IN COOLING (Reg. EU 2016/2281)								
Ambient refrigeration								
Prated,c	(11)	kW	-	-	-	-	682	798
SEER	(11)(12)		-	-	-	-	4,13	4,13
Performance ηs	(11)(13)	%	-	-	-	-	162	162
SEASONAL EFFICIENCY IN HEATING (Reg. EU 813/2013)								
PDesign	(5)	kW	359	387	353	398	-	-
SCOP	(5)(14)		3,48	3,60	3,60	3,61	-	-
Performance ηs	(5)(15)	%	136	141	141	141	-	-
Seasonal efficiency class	(5)		-	-	-	-	-	-
EXCHANGERS								
HEAT EXCHANGER USER SIDE IN REFRIGERATION								
Water flow	(1)	l/s	22,42	24,55	25,89	28,88	32,70	38,23
Pressure drop	(1)	kPa	25,1	27,7	30,8	21,6	29,0	29,0
HEAT EXCHANGER USER SIDE IN HEATING								
Water flow	(3)	l/s	23,75	26,13	27,55	29,67	34,34	39,85
Pressure drop	(3)	kPa	28,2	31,4	34,9	22,8	31,9	31,5
REFRIGERANT CIRCUIT								
Compressors nr.		N°	2	2	2	2	2	2
No. Circuits		N°	2	2	2	2	2	2
Refrigerant charge		kg	210	240	250	254	312	360
NOISE LEVEL								
Sound Pressure	(6)	dB(A)	60	62	62	62	62	63
Sound power level in cooling	(7)(8)	dB(A)	93	95	95	95	95	96
Sound power level in heating	(7)(9)	dB(A)	94	96	0	0	0	0
SIZE AND WEIGHT								
A	(10)	mm	6300	7200	7200	7200	8400	9700
B	(10)	mm	2260	2260	2260	2260	2260	2260
H	(10)	mm	2350	2350	2350	2350	2350	2350
Operating weight	(10)	kg	7580	8060	8160	8600	9160	11380

Notes:
1 Plant (side) cooling exchanger water (in/out) 12°C/7°C; Source (side) heat exchanger air (in) 35°C.
2 Values in compliance with EN14511-3:2013.
3 Plant (side) heat exchanger water (in/out) 40°C/45°C; Source (side) heat exchanger air (in) 7°C - 87% R.H.
4 Plant (side) cooling exchanger water (in/out) 12°C/7°C; Plant (side) heat exchanger water (in/out) 40°C/45°C.
5 Seasonal space heating energy efficiency class LOW TEMPERATURE in AVERAGE climate conditions [REGULATION (EU) N. 813/2013]
6 Average sound pressure level at 10m distance, unit in a free field on a reflective surface; non-binding value calculated from the sound power level.
7 Sound power on the basis of measurements made in compliance with ISO 9614.
8 Sound power level in cooling, outdoors.
9 Sound power level in heating, outdoors.
10 Unit in standard configuration/execution, without optional accessories.
11 Seasonal energy efficiency of the cooling environment [REGULATION (EU) N. 2016/2281]
12 Seasonal space heating energy index
13 Seasonal energy efficiency of the space cooling
14 Seasonal performance coefficient
15 Seasonal space heating energy efficiency
The units highlighted in this publication contain HFC R134a [GWP_{100} 1430] fluorinated greenhouse gases.

ERACS2-Q / SL-CA			1062	1162	1362	1562	1762	1962
Power supply		V/ph/Hz	400/3/50	400/3/50	400/3/50	400/3/50	400/3/50	400/3/50
PERFORMANCE								
COOLING ONLY (GROSS VALUE)								
Cooling capacity	(1)	kW	199	233	283	314	356	401
Total power input	(1)	kW	72,7	87,6	109	113	137	149
EER	(1)	kW/kW	2,74	2,66	2,61	2,78	2,59	2,69
COOLING ONLY (EN14511 VALUE)								
Cooling capacity	(1)(2)	kW	199	232	282	313	355	400
EER	(1)(2)	kW/kW	2,71	2,63	2,58	2,75	2,57	2,67
ESEER	(1)(2)	kW/kW	-	-	-	-	-	-
HEATING ONLY (GROSS VALUE)								
Total heating capacity	(3)	kW	211	251	301	330	385	422
Total power input	(3)	kW	64,8	78,4	89,9	98,4	119	127
COP	(3)	kW/kW	3,26	3,20	3,35	3,35	3,25	3,33
HEATING ONLY (EN14511 VALUE)								
Total heating capacity	(2)(3)	kW	212	252	302	331	387	423
COP	(2)(3)	kW/kW	3,24	3,18	3,32	3,32	3,22	3,31
COOLING WITH TOTAL HEAT RECOVERY								
Cooling capacity	(4)	kW	209	248	305	329	381	428
Total power input	(4)	kW	60,6	72,2	87,1	92,5	111	122
Recovery heat exchanger capacity	(4)	kW	266	316	386	416	486	542
TER		kW/kW	7,83	7,81	7,93	8,06	7,80	7,97
ENERGY EFFICIENCY								
SEASONAL EFFICIENCY IN COOLING (Reg. EU 2016/2281)								
Ambient refrigeration								
Prated,c	(11)	kW	-	-	-	-	-	-
SEER	(11)(12)		-	-	-	-	-	-
Performance ηs	(11)(13)	%	-	-	-	-	-	-
SEASONAL EFFICIENCY IN HEATING (Reg. EU 813/2013)								
PDesign	(5)	kW	152	205	215	236	276	304
SCOP	(5)(14)		3,42	3,21	3,45	3,54	3,40	3,55
Performance ηs	(5)(15)	%	134	126	135	138	133	139
Seasonal efficiency class	(5)		-	-	-	-	-	-
EXCHANGERS								
HEAT EXCHANGER USER SIDE IN REFRIGERATION								
Water flow	(1)	l/s	9,54	11,15	13,55	15,00	17,02	19,20
Pressure drop	(1)	kPa	26,0	35,4	32,1	39,4	35,3	24,8
HEAT EXCHANGER USER SIDE IN HEATING								
Water flow	(3)	l/s	10,19	12,12	14,52	15,93	18,59	20,36
Pressure drop	(3)	kPa	29,6	41,9	36,9	44,4	42,1	27,9
REFRIGERANT CIRCUIT								
Compressors nr.		N°	2	2	2	2	2	2
No. Circuits		N°	2	2	2	2	2	2
Refrigerant charge		kg	83,0	97,0	132	132	160	167
NOISE LEVEL								
Sound Pressure	(6)	dB(A)	54	55	55	56	55	55
Sound power level in cooling	(7)(8)	dB(A)	86	87	87	88	88	88
Sound power level in heating	(7)(9)	dB(A)	87	88	88	89	89	89
SIZE AND WEIGHT								
A	(10)	mm	4610	4610	5610	5610	6610	6610
B	(10)	mm	2220	2220	2220	2220	2220	2220
H	(10)	mm	2150	2420	2430	2430	2430	2430
Operating weight	(10)	kg	3600	3870	4620	5040	5520	5670

Notes:
1 Plant (side) cooling exchanger water (in/out) 12°C/7°C; Source (side) heat exchanger air (in) 35°C.
2 Values in compliance with EN14511-3:2013.
3 Plant (side) heat exchanger water (in/out) 40°C/45°C; Source (side) heat exchanger air (in) 7°C - 87% R.H.
4 Plant (side) cooling exchanger water (in/out) 12°C/7°C; Plant (side) heat exchanger water (in/out) 40°C/45°C.
5 Seasonal space heating energy efficiency class LOW TEMPERATURE in AVERAGE climate conditions [REGULATION (EU) N. 813/2013]
6 Average sound pressure level at 10m distance, unit in a free field on a reflective surface; non-binding value calculated from the sound power level.
7 Sound power on the basis of measurements made in compliance with ISO 9614.
8 Sound power level in cooling, outdoors.
9 Sound power level in heating, outdoors.
10 Unit in standard configuration/execution, without optional accessories.
11 Seasonal energy efficiency of the cooling environment [REGULATION (EU) N. 2016/2281]
12 Seasonal space heating energy index
13 Seasonal energy efficiency of the space cooling
14 Seasonal performance coefficient
15 Seasonal space heating energy efficiency
The units highlighted in this publication contain HFC R134a [GWP_{100} 1430] fluorinated greenhouse gases.

ERACS2-Q / SL-CA			2022	2222	2422	2622	2722	3222
Power supply		V/ph/Hz	400/3/50	400/3/50	400/3/50	400/3/50	400/3/50	400/3/50
PERFORMANCE								
COOLING ONLY (GROSS VALUE)								
Cooling capacity	(1)	kW	464	509	537	597	678	790
Total power input	(1)	kW	166	170	180	210	229	281
EER	(1)	kW/kW	2,80	2,99	2,98	2,85	2,96	2,81
COOLING ONLY (EN14511 VALUE)								
Cooling capacity	(1)(2)	kW	463	508	536	596	676	789
EER	(1)(2)	kW/kW	2,78	2,96	2,95	2,83	2,93	2,79
ESEER	(1)(2)	kW/kW	-	-	-	-	-	-
HEATING ONLY (GROSS VALUE)								
Total heating capacity	(3)	kW	486	536	564	605	703	815
Total power input	(3)	kW	147	158	167	176	205	238
COP	(3)	kW/kW	3,30	3,40	3,38	3,44	3,42	3,43
HEATING ONLY (EN14511 VALUE)								
Total heating capacity	(2)(3)	kW	487	537	566	607	705	818
COP	(2)(3)	kW/kW	3,28	3,38	3,35	3,42	3,40	3,41
COOLING WITH TOTAL HEAT RECOVERY								
Cooling capacity	(4)	kW	484	522	550	631	701	826
Total power input	(4)	kW	134	145	153	170	193	228
Recovery heat exchanger capacity	(4)	kW	609	658	694	791	883	1041
TER		kW/kW	8,18	8,14	8,12	8,35	8,19	8,17
ENERGY EFFICIENCY								
SEASONAL EFFICIENCY IN COOLING (Reg. EU 2016/2281)								
Ambient refrigeration								
Prated,c	(11)	kW	-	-	-	-	676	789
SEER	(11)(12)		-	-	-	-	4,11	4,13
Performance ηs	(11)(13)	%	-	-	-	-	161	162
SEASONAL EFFICIENCY IN HEATING (Reg. EU 813/2013)								
PDesign	(5)	kW	359	386	356	400	-	-
SCOP	(5)(14)		3,49	3,60	3,62	3,62	-	-
Performance ηs	(5)(15)	%	137	141	142	142	-	-
Seasonal efficiency class	(5)		-	-	-	-	-	-
EXCHANGERS								
HEAT EXCHANGER USER SIDE IN REFRIGERATION								
Water flow	(1)	l/s	22,19	24,34	25,68	28,56	32,41	37,80
Pressure drop	(1)	kPa	24,6	27,3	30,3	21,1	28,5	28,3
HEAT EXCHANGER USER SIDE IN HEATING								
Water flow	(3)	l/s	23,45	25,86	27,23	29,23	33,94	39,36
Pressure drop	(3)	kPa	27,5	30,8	34,1	22,1	31,2	30,7
REFRIGERANT CIRCUIT								
Compressors nr.		N°	2	2	2	2	2	2
No. Circuits		N°	2	2	2	2	2	2
Refrigerant charge		kg	210	240	250	254	312	360
NOISE LEVEL								
Sound Pressure	(6)	dB(A)	56	58	58	58	58	59
Sound power level in cooling	(7)(8)	dB(A)	89	91	91	91	91	92
Sound power level in heating	(7)(9)	dB(A)	90	92	0	0	0	0
SIZE AND WEIGHT								
A	(10)	mm	6300	7200	7200	7200	8400	9700
B	(10)	mm	2260	2260	2260	2260	2260	2260
H	(10)	mm	2350	2350	2350	2350	2350	2350
Operating weight	(10)	kg	7670	8150	8250	8690	9260	11480

Notes:
1 Plant (side) cooling exchanger water (in/out) 12°C/7°C; Source (side) heat exchanger air (in) 35°C.
2 Values in compliance with EN14511-3:2013.
3 Plant (side) heat exchanger water (in/out) 40°C/45°C; Source (side) heat exchanger air (in) 7°C - 87% R.H.
4 Plant (side) cooling exchanger water (in/out) 12°C/7°C; Plant (side) heat exchanger water (in/out) 40°C/45°C.
5 Seasonal space heating energy efficiency class LOW TEMPERATURE in AVERAGE climate conditions [REGULATION (EU) N. 813/2013]
6 Average sound pressure level at 10m distance, unit in a free field on a reflective surface; non-binding value calculated from the sound power level.
7 Sound power on the basis of measurements made in compliance with ISO 9614.
8 Sound power level in cooling, outdoors.
9 Sound power level in heating, outdoors.
10 Unit in standard configuration/execution, without optional accessories.
11 Seasonal energy efficiency of the cooling environment [REGULATION (EU) N. 2016/2281]
12 Seasonal space heating energy index
13 Seasonal energy efficiency of the space cooling
14 Seasonal performance coefficient
15 Seasonal space heating energy efficiency
The units highlighted in this publication contain HFC R134a [GWP_{100} 1430] fluorinated greenhouse gases.

ERACS2-Q / XL-CA			2022	2222	2422	2622	2722	3222
Power supply		V/ph/Hz	400/3/50	400/3/50	400/3/50	400/3/50	400/3/50	400/3/50
PERFORMANCE								
COOLING ONLY (GROSS VALUE)								
Cooling capacity	(1)	kW	454	500	528	584	665	772
Total power input	(1)	kW	167	169	180	212	230	287
EER	(1)	kW/kW	2,73	2,95	2,94	2,76	2,90	2,70
COOLING ONLY (EN14511 VALUE)								
Cooling capacity	(1)(2)	kW	454	499	527	583	664	771
EER	(1)(2)	kW/kW	2,71	2,93	2,91	2,74	2,87	2,67
ESEER	(1)(2)	kW/kW	-	-	-	-	-	-
HEATING ONLY (GROSS VALUE)								
Total heating capacity	(3)	kW	486	536	564	607	703	815
Total power input	(3)	kW	143	152	161	170	199	230
COP	(3)	kW/kW	3,41	3,53	3,50	3,56	3,54	3,54
HEATING ONLY (EN14511 VALUE)								
Total heating capacity	(2)(3)	kW	487	537	566	608	705	818
COP	(2)(3)	kW/kW	3,39	3,50	3,47	3,54	3,52	3,52
COOLING WITH TOTAL HEAT RECOVERY								
Cooling capacity	(4)	kW	484	522	550	631	701	826
Total power input	(4)	kW	134	145	153	170	193	228
Recovery heat exchanger capacity	(4)	kW	609	658	694	791	883	1041
TER		kW/kW	8,18	8,14	8,12	8,35	8,19	8,17
ENERGY EFFICIENCY								
SEASONAL EFFICIENCY IN COOLING (Reg. EU 2016/2281)								
Ambient refrigeration								
Prated,c	(11)	kW	-	-	527	583	664	771
SEER	(11)(12)		-	-	4,38	4,13	4,36	4,13
Performance ηs	(11)(13)	%	-	-	172	162	171	162
SEASONAL EFFICIENCY IN HEATING (Reg. EU 813/2013)								
PDesign	(5)	kW	359	386	-	-	-	-
SCOP	(5)(14)		3,73	3,89	-	-	-	-
Performance ηs	(5)(15)	%	146	153	-	-	-	-
Seasonal efficiency class	(5)		-	-	-	-	-	-
EXCHANGERS								
HEAT EXCHANGER USER SIDE IN REFRIGERATION								
Water flow	(1)	l/s	21,73	23,93	25,27	27,92	31,82	36,94
Pressure drop	(1)	kPa	23,6	26,4	29,4	20,2	27,4	27,1
HEAT EXCHANGER USER SIDE IN HEATING								
Water flow	(3)	l/s	23,45	25,86	27,23	29,29	33,94	39,36
Pressure drop	(3)	kPa	27,5	30,8	34,1	22,2	31,2	30,7
REFRIGERANT CIRCUIT								
Compressors nr.		N°	2	2	2	2	2	2
No. Circuits		N°	2	2	2	2	2	2
Refrigerant charge		kg	210	240	250	254	312	360
NOISE LEVEL								
Sound Pressure	(6)	dB(A)	52	54	54	54	54	55
Sound power level in cooling	(7)(8)	dB(A)	85	87	87	87	87	88
Sound power level in heating	(7)(9)	dB(A)	86	88	0	0	0	0
SIZE AND WEIGHT								
A	(10)	mm	6300	7200	7200	7200	8400	9700
B	(10)	mm	2260	2260	2260	2260	2260	2260
H	(10)	mm	2350	2350	2350	2350	2350	2350
Operating weight	(10)	kg	7790	8260	8350	8790	9340	11580

Notes:
1 Plant (side) cooling exchanger water (in/out) 12°C/7°C; Source (side) heat exchanger air (in) 35°C.
2 Values in compliance with EN14511-3:2013.
3 Plant (side) heat exchanger water (in/out) 40°C/45°C; Source (side) heat exchanger air (in) 7°C - 87% R.H.
4 Plant (side) cooling exchanger water (in/out) 12°C/7°C; Plant (side) heat exchanger water (in/out) 40°C/45°C.
5 Seasonal space heating energy efficiency class LOW TEMPERATURE in AVERAGE climate conditions [REGULATION (EU) N. 813/2013]
6 Average sound pressure level at 10m distance, unit in a free field on a reflective surface; non-binding value calculated from the sound power level.
7 Sound power on the basis of measurements made in compliance with ISO 9614.
8 Sound power level in cooling, outdoors.
9 Sound power level in heating, outdoors.
10 Unit in standard configuration/execution, without optional accessories.
11 Seasonal energy efficiency of the cooling environment [REGULATION (EU) N. 2016/2281]
12 Seasonal space heating energy index
13 Seasonal energy efficiency of the space cooling
14 Seasonal performance coefficient
15 Seasonal space heating energy efficiency
The units highlighted in this publication contain HFC R134a [GWP_{100} 1430] fluorinated greenhouse gases.

ERACS2-Q / XL-CA-E			1062	1162	1362	1562	1762	2022	2222	2422	2622
Power supply		V/ph/Hz	400/3/50	400/3/50	400/3/50	400/3/50	400/3/50	400/3/50	400/3/50	400/3/50	400/3/50
PERFORMANCE											
COOLING ONLY (GROSS VALUE)											
Cooling capacity	(1)	kW	204	247	293	319	366	473	510	541	611
Total power input	(1)	kW	66,6	77,0	99,5	105	127	152	163	169	193
EER	(1)	kW/kW	3,07	3,21	2,95	3,06	2,88	3,11	3,14	3,20	3,17
COOLING ONLY (EN14511 VALUE)											
Cooling capacity	(1)(2)	kW	204	246	292	318	365	471	508	540	610
EER	(1)(2)	kW/kW	3,03	3,16	2,91	3,01	2,85	3,08	3,11	3,17	3,14
ESEER	(1)(2)	kW/kW	-	-	-	-	-	-	-	-	-
HEATING ONLY (GROSS VALUE)											
Total heating capacity	(3)	kW	218	267	308	340	393	513	552	588	644
Total power input	(3)	kW	62,4	77,6	88,4	95,2	116	145	154	164	176
COP	(3)	kW/kW	3,50	3,44	3,49	3,57	3,38	3,52	3,58	3,59	3,67
HEATING ONLY (EN14511 VALUE)											
Total heating capacity	(2)(3)	kW	219	268	309	342	394	514	553	590	645
COP	(2)(3)	kW/kW	3,47	3,41	3,46	3,54	3,35	3,50	3,56	3,56	3,65
COOLING WITH TOTAL HEAT RECOVERY											
Cooling capacity	(4)	kW	209	248	305	329	381	484	522	550	631
Total power input	(4)	kW	60,6	72,2	87,1	92,5	111	134	145	153	170
Recovery heat exchanger capacity	(4)	kW	266	316	386	416	486	609	658	694	791
TER		kW/kW	7,83	7,81	7,93	8,06	7,80	8,18	8,14	8,12	8,35
ENERGY EFFICIENCY											
SEASONAL EFFICIENCY IN COOLING (Reg. EU 2016/2281)											
Ambient refrigeration											
Prated,c	(11)	kW	-	-	-	-	-	-	-	540	610
SEER	(11)(12)		-	-	-	-	-	-	-	4,45	4,29
Performance ηs	(11)(13)	%	-	-	-	-	-	-	-	175	169
SEASONAL EFFICIENCY IN HEATING (Reg. EU 813/2013)											
PDesign	(5)	kW	155	186	219	239	280	363	371	-	-
SCOP	(5)(14)		3,81	3,48	3,67	3,88	3,64	3,81	3,85	-	-
Performance ηs	(5)(15)	%	149	136	144	152	142	150	151	-	-
Seasonal efficiency class	(5)		-	-	-	-	-	-	-	-	-
EXCHANGERS											
HEAT EXCHANGER USER SIDE IN REFRIGERATION											
Water flow	(1)	l/s	9,77	11,82	14,03	15,28	17,52	22,60	24,37	25,89	29,23
Pressure drop	(1)	kPa	27,2	39,8	34,4	40,8	37,4	25,5	27,3	30,8	22,1
HEAT EXCHANGER USER SIDE IN HEATING											
Water flow	(3)	l/s	10,53	12,90	14,87	16,43	18,96	24,75	26,63	28,38	31,07
Pressure drop	(3)	kPa	31,6	47,5	38,7	47,2	43,8	30,6	32,6	37,1	25,0
REFRIGERANT CIRCUIT											
Compressors nr.		N°	2	2	2	2	2	2	2	2	2
No. Circuits		N°	2	2	2	2	2	2	2	2	2
Refrigerant charge		kg	97,0	116	132	132	167	248	254	282	286
NOISE LEVEL											
Sound Pressure	(6)	dB(A)	53	54	54	54	54	53	55	55	55
Sound power level in cooling	(7)(8)	dB(A)	85	86	86	87	87	86	88	88	88
Sound power level in heating	(7)(9)	dB(A)	86	87	87	88	88	87	89	0	0
SIZE AND WEIGHT											
A	(10)	mm	4610	5610	5610	6610	6610	8400	9300	9300	9300
B	(10)	mm	2220	2220	2220	2220	2220	2260	2260	2260	2260
H	(10)	mm	2420	2430	2430	2430	2430	2350	2350	2350	2350
Operating weight	(10)	kg	3900	4490	4830	5590	5730	8510	8720	8890	9400

Notes:
1 Plant (side) cooling exchanger water (in/out) 12°C/7°C; Source (side) heat exchanger air (in) 35°C.
2 Values in compliance with EN14511-3:2013.
3 Plant (side) heat exchanger water (in/out) 40°C/45°C; Source (side) heat exchanger air (in) 7°C - 87% R.H.
4 Plant (side) cooling exchanger water (in/out) 12°C/7°C; Plant (side) heat exchanger water (in/out) 40°C/45°C.
5 Seasonal space heating energy efficiency class LOW TEMPERATURE in AVERAGE climate conditions [REGULATION (EU) N. 813/2013]
6 Average sound pressure level at 10m distance, unit in a free field on a reflective surface; non-binding value calculated from the sound power level.
7 Sound power on the basis of measurements made in compliance with ISO 9614.
8 Sound power level in cooling, outdoors.
9 Sound power level in heating, outdoors.
10 Unit in standard configuration/execution, without optional accessories.
11 Seasonal energy efficiency of the cooling environment [REGULATION (EU) N. 2016/2281]
12 Seasonal space heating energy index
13 Seasonal energy efficiency of the space cooling
14 Seasonal performance coefficient
15 Seasonal space heating energy efficiency
The units highlighted in this publication contain HFC R134a [GWP_{100} 1430] fluorinated greenhouse gases.

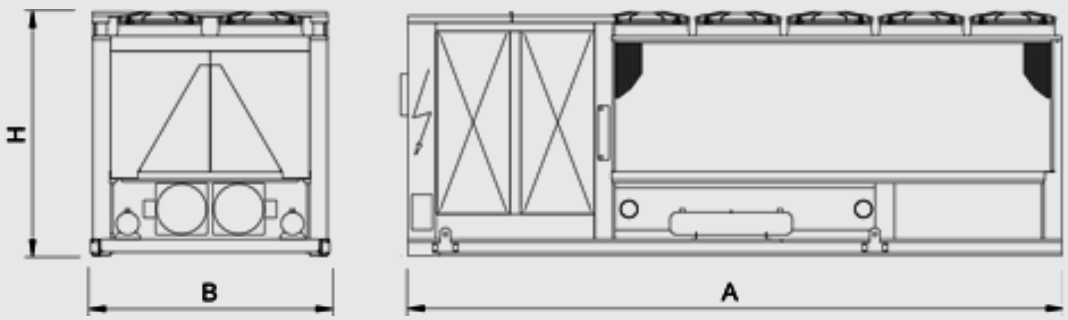

UNITS FOR SIMULTANEOUS AND INDEPENDENT PRODUCTION OF HOT AND COLD WATER

i-FX-Q2 0502 - 1102

INTEGRA unit for 4-pipe systems, air source, VSD screw compressors and EC fans, for outdoor installation 443-1125 kW



Full inverter multi-purpose outdoor unit for use in 4-pipe systems for the simultaneous production of chilled and hot water in two independent hydronic circuits. These units are able to simultaneously satisfy the demand for hot and cold water through a system that does not require seasonal switching and is therefore a valid alternative to traditional plants with chiller and boiler. Each circuit works with a variable speed drive semi-hermetic screw compressor using R134a, two shell and tubes heat exchangers and a source side coil heat exchanger shared by both circuits. The cold side shell and tube heat exchanger acts as an evaporator for the production of cold water, while the hot side shell and tube heat exchanger works as a condenser for the production of hot water. The source side auxiliary finned coil works as either condenser or evaporator as required by the loads.

Version

CA	Class A of efficiency
SL-CA	Super Low noise version, Class A of efficiency
XL-CA	eXtra Low noise version, Class A of efficiency

Features

UNIQUE PROPOSAL

Unit designed to satisfy the cold and the hot side requirements simultaneously, for 4-pipe systems without any particular operation mode setting

ENERGY SAVING

Energy saving guaranteed by the advanced operation's logic. The best operation mode is set completely automatically and independently by the unit's controller, in order to minimize the absorbed energy whatever the cooling and/or heating demand might be

VERY HIGH EFFICIENCY

High full load and partial load efficiency in both heating and cooling mode, using inverter technology to continuously modulate compressors operation and EC fans as standard, in order to deliver the exact amount of energy based on the actual needs of the plant. High efficiency means reduced energy consumption throughout the entire year, for any operation mode and any outdoor condition.

ErP READY

The highest level of efficiency at part load, thanks to the inverter technology, can meet and exceed the minimum seasonal efficiency for heating, SCOP (only for reversible units) and for cooling, SEER, according with the eco-sustainable design requirements for all products using energy. The units already comply with the minimum seasonal energy efficiency requirements that will start from 2021.

WIDE OPERATING RANGE

Unit´s operation guaranteed with external air temperature down to -12°C during winter and up to 46°C during summer. Production of hot water up to 60°C without accessories and chilled water from -8°C to +18°C in order to suit any possible application.

HARMONY BETWEEN UNIT AND PLANT

Low inrush current and power factor higher than similar fixed speed units, permit an easy electrical installation which is not stressed during start-up and with no need of extra devices for power factor correction. The use of VSD technology allows the unit to partialize in a stepless way, with consequent lower fluctuations of leaving water temperature.

TRUE SILENCE

At partial loads (ie for most of the year), thanks to the use of EC fans and VSD screw compressors, i-FX-Q2 units are characterized by lower noise emissions compared to fixed speed units.

FLEXIBLE SELECTION

The units can be selected beyond the nominal point, giving the possibility to contain the initial investment (boost selection) or to enphasize even more the efficiencies (derating selection).

Accessory

- "LT" kit for working down to -12°C in heat pump mode
- Noise reducer (only on not silenced versions)
- Special fan diffusers
- Thicker soundproofing cladding
- Hydronic group
- VPF (Variable Primary Flow) system
- Set-up for remote connectivity with ModBus, Echelon, Bacnet, Bacnet over-IP.
- Touch Screen visual display
- Leak detector

Controls

W3000TE

The W3000TE controller offers advanced functions and algorithms.

KIPlink - Keyboard In Your Pocket - is the innovative user interface based on WiFi technology that allows one to operate on the unit directly from the smartphone or tablet. Using KIPlink, it is possible to turn the unit on and off, adjust the set-point, plot the main operating variables, monitor in detail the status of the refrigerant circuits, the compressors, the fans and the pumps (if present) and display and reset the possible alarms. In addition to or as an alternative, the Touch interface, with a 7" WVGA colour display and a front USB port, or the Large keyboard, with a wide LCD display and led icons, are available. The temperature control is characterized by the continuous capacity modulation, based on PID algorithms. The diagnostics comprises a complete alarm management system, with the "black-box" (via PC) and the alarm history display (via user interface or also PC) for enhanced analysis of the unit operation. Optional proprietary devices can perform the adjustment of the resources in systems made of several units. Consumption metering and performance measurement are possible as well. Supervision can be easily developed via proprietary devices or the integration in third party systems by means of the most common protocols as ModBus, Bacnet, Bacnet-over-IP, LonWorks. Compatibility with the remote keyboard (up to 8 units). The programmable timer manages a weekly schedule organised into time bands to optimise unit performance by minimising power consumption during periods of inactivity. Up to 10 daily time bands can be associated with different operating set points.

i-FX-Q2 CA			0502	0532	0602	0652	0702	0802	0902	1002	1102
Power supply		V/ph/Hz	400/3/50	400/3/50	400/3/50	400/3/50	400/3/50	400/3/50	400/3/50	400/3/50	400/3/50
PERFORMANCE											
SELECTION RANGE											
Cooling capacity range	(1)	kW	403-520	432-536	454-570	517-671	599-712	620-787	795-982	901-1048	1049-1125
EER (up to)	(1)	kW/kW	3,33	3,29	3,36	3,24	3,24	3,33	3,24	3,21	3,06
Heating capacity range	(3)	kW	376-492	404-492	427-526	498-638	582-678	612-757	788-931	898-979	982-1060
COP (up to)	(3)	kW/kW	3,50	3,48	3,53	3,48	3,52	3,60	3,46	3,26	3,49
SELECTION RATED											
COOLING ONLY (GROSS VALUE)											
Cooling capacity	(1)(10)	kW	488	531	570	627	689	787	915	985	1083
Total power input	(1)(10)	kW	155	168	182	199	219	251	288	312	360
EER	(1)(10)	kW/kW	3,14	3,15	3,14	3,15	3,14	3,13	3,18	3,16	3,01
COOLING ONLY (EN14511 VALUE)											
Cooling capacity	(1)(2)(10)	kW	486	529	568	625	687	786	912	982	1079
EER	(1)(2)(10)	kW/kW	3,10	3,10	3,10	3,10	3,10	3,10	3,14	3,12	2,97
HEATING ONLY (GROSS VALUE)											
Total heating capacity	(3)(10)	kW	458	486	526	593	652	757	862	928	1018
Total power input	(3)(10)	kW	133	143	154	171	189	216	248	265	292
COP	(3)(10)	kW/kW	3,44	3,40	3,42	3,47	3,45	3,51	3,47	3,50	3,48
HEATING ONLY (EN14511 VALUE)											
Total heating capacity	(2)(3)(10)	kW	460	487	527	594	654	759	865	931	1020
COP	(2)(3)(10)	kW/kW	3,42	3,38	3,41	3,45	3,43	3,49	3,44	3,48	3,46
COOLING WITH TOTAL HEAT RECOVERY											
Cooling capacity	(4)(10)	kW	489	533	571	624	683	785	914	987	1102
Total power input	(4)(10)	kW	137	151	161	174	193	221	258	274	310
Recovery heat exchanger capacity	(4)(10)	kW	617	675	722	788	864	993	1157	1245	1393
TER	(4)(10)	kW/kW	8,08	8,01	8,04	8,11	8,02	8,03	8,02	8,13	8,06
ENERGY EFFICIENCY											
SEASONAL EFFICIENCY IN COOLING (Reg. EU 2016/2281)											
Ambient refrigeration											
Prated,c	(12)	kW	-	-	-	625	687	786	912	982	1079
SEER	(12)(13)		-	-	-	4,93	4,95	4,95	4,57	4,52	4,45
Performance ηs	(12)(14)	%	-	-	-	194	195	195	180	178	175
SEASONAL EFFICIENCY IN HEATING (Reg. EU 813/2013)											
PDesign	(5)(10)	kW	340	364	390	-	-	-	-	-	-
SCOP	(5)(10)(15)		3,91	3,92	3,89	-	-	-	-	-	-
Performance ηs	(5)(10)(16)	%	153	154	153	-	-	-	-	-	-
Seasonal efficiency class	(5)(10)		-	-	-	-	-	-	-	-	-
EXCHANGERS											
HEAT EXCHANGER USER SIDE IN REFRIGERATION											
Water flow	(1)(10)	l/s	23,31	25,41	27,26	29,97	32,95	37,65	43,76	47,12	51,77
Pressure drop	(1)(10)	kPa	40,8	51,6	32,5	40,5	45,4	29,0	39,7	42,3	51,4
HEAT EXCHANGER USER SIDE IN HEATING											
Water flow	(3)(10)	l/s	22,13	23,47	25,38	28,61	31,49	36,55	41,61	44,81	49,14
Pressure drop	(3)(10)	kPa	22,5	25,4	21,4	27,0	32,0	32,2	41,7	34,9	30,0
REFRIGERANT CIRCUIT											
Compressors nr.		N°	2	2	2	2	2	2	2	2	2
No. Circuits		N°	2	2	2	2	2	2	2	2	2
Regulation			STEPLESS	STEPLESS	STEPLESS	STEPLESS	STEPLESS	STEPLESS	STEPLESS	STEPLESS	STEPLESS
Refrigerant			R134a	R134a	R134a	R134a	R134a	R134a	R134a	R134a	R134a
Refrigerant charge		kg	230	235	240	260	260	325	350	470	470
NOISE LEVEL											
Sound Pressure	(6)(10)	dB(A)	66	66	68	68	68	68	69	69	69
Sound power level in cooling	(7)(8)(10)	dB(A)	99	99	101	101	101	101	102	102	102
Sound power level in heating	(7)(9)(10)	dB(A)	99	99	101	101	101	101	102	102	102
SIZE AND WEIGHT											
A	(11)	mm	8150	8150	8900	9650	10400	10400	10400	11900	11900
B	(11)	mm	2260	2260	2260	2260	2260	2260	2260	2260	2260
H	(11)	mm	2530	2530	2530	2530	2530	2530	2530	2530	2530
Operating weight	(11)	kg	8350	8380	9080	9590	10060	11010	12310	14110	14150

Notes:
1 Plant (side) cooling exchanger water (in/out) 12°C/7°C; Source (side) heat exchanger air (in) 35°C.
2 Values in compliance with EN14511-3:2013.
3 Plant (side) heat exchanger water (in/out) 40°C/45°C; Source (side) heat exchanger air (in) 7°C - 87% R.H.
4 Plant (side) cooling exchanger water (in/out) 12°C/7°C; Plant (side) heat exchanger water (in/out) 40°C/45°C.
5 Seasonal space heating energy efficiency class LOW TEMPERATURE in AVERAGE climate conditions [REGULATION (EU) N. 813/2013]
6 Average sound pressure level at 10m distance, unit in a free field on a reflective surface; non-binding value calculated from the sound power level.
7 Sound power on the basis of measurements made in compliance with ISO 9614.
8 Sound power level in cooling, outdoors.
9 Sound power level in heating, outdoors.
10 Unit performance with inverter compressor at nominal speed.
11 Unit in standard configuration/execution, without optional accessories.
12 Seasonal energy efficiency of the cooling environment [REGULATION (EU) N. 2016/2281]
13 Seasonal space heating energy index
14 Seasonal energy efficiency of the space cooling
15 Seasonal performance coefficient
16 Seasonal space heating energy efficiency
The units highlighted in this publication contain HFC R134a [GWP_{100} 1430] fluorinated greenhouse gases.

i-FX-Q2 SL-CA			0502	0532	0602	0652	0702	0802	0902	1002	1102
Power supply		V/ph/Hz	400/3/50	400/3/50	400/3/50	400/3/50	400/3/50	400/3/50	400/3/50	400/3/50	400/3/50
PERFORMANCE											
SELECTION RANGE											
Cooling capacity range	(1)	kW	386-499	415-513	445-549	506-647	584-687	576-766	733-905	844-982	945-1049
EER (up to)	(1)	kW/kW	3,20	3,20	3,27	3,20	3,21	3,11	3,18	3,14	3,02
Heating capacity range	(3)	kW	389-487	400-487	438-521	504-631	595-672	610-749	783-873	885-939	968-1008
COP (up to)	(3)	kW/kW	3,55	3,55	3,65	3,54	3,30	3,63	3,46	3,42	3,51
SELECTION RATED											
COOLING ONLY (GROSS VALUE)											
Cooling capacity	(1)(10)	kW	468	508	549	604	665	766	881	952	1039
Total power input	(1)(10)	kW	155	169	181	196	215	251	293	316	370
EER	(1)(10)	kW/kW	3,01	3,00	3,03	3,08	3,10	3,05	3,00	3,02	2,81
COOLING ONLY (EN14511 VALUE)											
Cooling capacity	(1)(2)(10)	kW	466	507	548	602	663	764	879	949	1036
EER	(1)(2)(10)	kW/kW	2,98	2,96	3,00	3,04	3,06	3,03	2,97	2,98	2,77
HEATING ONLY (GROSS VALUE)											
Total heating capacity	(3)(10)	kW	454	482	521	587	647	749	852	919	1008
Total power input	(3)(10)	kW	131	141	151	168	186	212	245	262	289
COP	(3)(10)	kW/kW	3,46	3,41	3,44	3,49	3,48	3,53	3,47	3,52	3,49
HEATING ONLY (EN14511 VALUE)											
Total heating capacity	(2)(3)(10)	kW	455	483	522	588	648	751	854	922	1010
COP	(2)(3)(10)	kW/kW	3,44	3,39	3,42	3,47	3,45	3,50	3,45	3,49	3,47
COOLING WITH TOTAL HEAT RECOVERY											
Cooling capacity	(4)(10)	kW	489	533	571	624	683	785	914	987	1102
Total power input	(4)(10)	kW	137	151	161	174	193	221	258	274	310
Recovery heat exchanger capacity	(4)(10)	kW	617	675	722	788	864	993	1157	1245	1393
TER	(4)(10)	kW/kW	8,08	8,01	8,04	8,11	8,02	8,03	8,02	8,13	8,06
ENERGY EFFICIENCY											
SEASONAL EFFICIENCY IN COOLING (Reg. EU 2016/2281)											
Ambient refrigeration											
Prated,c	(12)	kW	-	-	-	602	663	764	879	949	1036
SEER	(12)(13)		-	-	-	4,93	4,98	4,93	4,58	4,50	4,44
Performance ηs	(12)(14)	%	-	-	-	194	196	194	180	177	174
SEASONAL EFFICIENCY IN HEATING (Reg. EU 813/2013)											
PDesign	(5)(10)	kW	364	363	385	-	-	-	-	-	-
SCOP	(5)(10)(15)		4,01	3,92	4,00	-	-	-	-	-	-
Performance ηs	(5)(10)(16)	%	157	154	157	-	-	-	-	-	-
Seasonal efficiency class	(5)(10)		-	-	-	-	-	-	-	-	-
EXCHANGERS											
HEAT EXCHANGER USER SIDE IN REFRIGERATION											
Water flow	(1)(10)	l/s	22,36	24,32	26,26	28,89	31,80	36,61	42,14	45,52	49,69
Pressure drop	(1)(10)	kPa	37,5	47,3	30,2	37,6	42,3	27,4	36,8	39,5	47,4
HEAT EXCHANGER USER SIDE IN HEATING											
Water flow	(3)(10)	l/s	21,92	23,25	25,14	28,33	31,22	36,15	41,10	44,37	48,64
Pressure drop	(3)(10)	kPa	22,1	24,9	21,1	26,5	31,5	31,5	40,7	34,2	29,4
REFRIGERANT CIRCUIT											
Compressors nr.		N°	2	2	2	2	2	2	2	2	2
No. Circuits		N°	2	2	2	2	2	2	2	2	2
Regulation			STEPLESS	STEPLESS	STEPLESS	STEPLESS	STEPLESS	STEPLESS	STEPLESS	STEPLESS	STEPLESS
Refrigerant			R134a	R134a	R134a	R134a	R134a	R134a	R134a	R134a	R134a
Refrigerant charge		kg	230	235	240	260	260	325	350	470	470
NOISE LEVEL											
Sound Pressure	(6)(10)	dB(A)	56	57	58	58	58	59	59	59	59
Sound power level in cooling	(7)(8)(10)	dB(A)	89	90	91	91	91	92	92	92	92
Sound power level in heating	(7)(9)(10)	dB(A)	89	90	91	91	91	92	92	92	92
SIZE AND WEIGHT											
A	(11)	mm	8150	8150	8900	9650	10400	10400	10400	11900	11900
B	(11)	mm	2260	2260	2260	2260	2260	2260	2260	2260	2260
H	(11)	mm	2530	2530	2530	2530	2530	2530	2530	2530	2530
Operating weight	(11)	kg	8800	8830	9530	10040	10510	11450	12750	14560	14600

Notes:
1 Plant (side) cooling exchanger water (in/out) 12°C/7°C; Source (side) heat exchanger air (in) 35°C.
2 Values in compliance with EN14511-3:2013.
3 Plant (side) heat exchanger water (in/out) 40°C/45°C; Source (side) heat exchanger air (in) 7°C - 87% R.H.
4 Plant (side) cooling exchanger water (in/out) 12°C/7°C; Plant (side) heat exchanger water (in/out) 40°C/45°C.
5 Seasonal space heating energy efficiency class LOW TEMPERATURE in AVERAGE climate conditions [REGULATION (EU) N. 813/2013]
6 Average sound pressure level at 10m distance, unit in a free field on a reflective surface; non-binding value calculated from the sound power level.
7 Sound power on the basis of measurements made in compliance with ISO 9614.
8 Sound power level in cooling, outdoors.
9 Sound power level in heating, outdoors.
10 Unit performance with inverter compressor at nominal speed.
11 Unit in standard configuration/execution, without optional accessories.
12 Seasonal energy efficiency of the cooling environment [REGULATION (EU) N. 2016/2281]
13 Seasonal space heating energy index
14 Seasonal energy efficiency of the space cooling
15 Seasonal performance coefficient
16 Seasonal space heating energy efficiency
The units highlighted in this publication contain HFC R134a [GWP_{100} 1430] fluorinated greenhouse gases.

i-FX-Q2 XL-CA			0502	0532	0602	0652	0702	0802	0902	1002
Power supply		V/ph/Hz	400/3/50	400/3/50	400/3/50	400/3/50	400/3/50	400/3/50	400/3/50	400/3/50
PERFORMANCE										
SELECTION RANGE										
Cooling capacity range	(1)	kW	341-443	382-484	415-526	458-572	525-633	593-732	687-848	785-912
EER (up to)	(1)	kW/kW	3,31	3,17	3,35	3,25	3,26	3,26	3,31	3,14
Heating capacity range	(3)	kW	334-434	365-462	397-502	448-560	515-621	584-721	668-825	765-889
COP (up to)	(3)	kW/kW	3,49	3,46	3,50	3,49	3,49	3,54	3,56	3,57
SELECTION RATED										
COOLING ONLY (GROSS VALUE)										
Cooling capacity	(1)(10)	kW	443	484	526	572	633	732	848	912
Total power input	(1)(10)	kW	146	162	172	185	204	239	282	302
EER	(1)(10)	kW/kW	3,02	2,98	3,05	3,09	3,11	3,06	3,01	3,02
COOLING ONLY (EN14511 VALUE)										
Cooling capacity	(1)(2)(10)	kW	442	482	524	570	631	730	845	910
EER	(1)(2)(10)	kW/kW	2,99	2,94	3,02	3,06	3,07	3,03	2,98	2,99
HEATING ONLY (GROSS VALUE)										
Total heating capacity	(3)(10)	kW	434	462	502	560	621	721	825	888
Total power input	(3)(10)	kW	125	134	144	160	178	204	235	250
COP	(3)(10)	kW/kW	3,48	3,44	3,47	3,50	3,50	3,54	3,51	3,55
HEATING ONLY (EN14511 VALUE)										
Total heating capacity	(2)(3)(10)	kW	435	463	503	562	622	723	828	891
COP	(2)(3)(10)	kW/kW	3,47	3,42	3,46	3,49	3,48	3,52	3,48	3,53
COOLING WITH TOTAL HEAT RECOVERY										
Cooling capacity	(4)(10)	kW	464	509	549	591	651	752	883	921
Total power input	(4)(10)	kW	129	142	151	165	182	212	247	262
Recovery heat exchanger capacity	(4)(10)	kW	586	643	690	746	822	951	1116	1167
TER	(4)(10)	kW/kW	8,11	8,08	8,22	8,11	8,07	8,02	8,09	7,98
ENERGY EFFICIENCY										
SEASONAL EFFICIENCY IN COOLING (Reg. EU 2016/2281)										
Ambient refrigeration										
Prated,c	(12)	kW	-	-	-	570	631	730	845	910
SEER	(12)(13)		-	-	-	4,96	5,02	4,98	4,53	4,43
Performance ηs	(12)(14)	%	-	-	-	195	198	196	178	174
SEASONAL EFFICIENCY IN HEATING (Reg. EU 813/2013)										
PDesign	(5)(10)	kW	316	343	368	-	-	-	-	-
SCOP	(5)(10)(15)		4,23	4,20	4,26	-	-	-	-	-
Performance ηs	(5)(10)(16)	%	166	165	167	-	-	-	-	-
Seasonal efficiency class	(5)(10)		-	-	-	-	-	-	-	-
EXCHANGERS										
HEAT EXCHANGER USER SIDE IN REFRIGERATION										
Water flow	(1)(10)	l/s	21,18	23,12	25,14	27,34	30,25	35,00	40,54	43,63
Pressure drop	(1)(10)	kPa	33,7	42,7	27,7	33,7	38,3	25,1	34,1	36,3
HEAT EXCHANGER USER SIDE IN HEATING										
Water flow	(3)(10)	l/s	20,95	22,29	24,23	27,05	29,96	34,81	39,83	42,89
Pressure drop	(3)(10)	kPa	20,2	22,9	19,6	24,2	29,0	29,2	38,2	31,9
REFRIGERANT CIRCUIT										
Compressors nr.		N°	2	2	2	2	2	2	2	2
No. Circuits		N°	2	2	2	2	2	2	2	2
Regulation			STEPLESS	STEPLESS	STEPLESS	STEPLESS	STEPLESS	STEPLESS	STEPLESS	STEPLESS
Refrigerant			R134a	R134a	R134a	R134a	R134a	R134a	R134a	R134a
Refrigerant charge		kg	230	235	240	260	260	325	350	470
NOISE LEVEL										
Sound Pressure	(6)(10)	dB(A)	53	54	55	55	55	56	55	56
Sound power level in cooling	(7)(8)(10)	dB(A)	86	87	88	88	88	89	88	89
Sound power level in heating	(7)(9)(10)	dB(A)	87	88	89	89	89	90	89	90
SIZE AND WEIGHT										
A	(11)	mm	8150	8150	8900	9650	10400	10400	10400	11900
B	(11)	mm	2260	2260	2260	2260	2260	2260	2260	2260
H	(11)	mm	2530	2530	2530	2530	2530	2530	2530	2530
Operating weight	(11)	kg	8800	8830	9530	10040	10510	11450	12750	14560

Notes:
1 Plant (side) cooling exchanger water (in/out) 12°C/7°C; Source (side) heat exchanger air (in) 35°C.
2 Values in compliance with EN14511-3:2013.
3 Plant (side) heat exchanger water (in/out) 40°C/45°C; Source (side) heat exchanger air (in) 7°C - 87% R.H.
4 Plant (side) cooling exchanger water (in/out) 12°C/7°C; Plant (side) heat exchanger water (in/out) 40°C/45°C.
5 Seasonal space heating energy efficiency class LOW TEMPERATURE in AVERAGE climate conditions [REGULATION (EU) N. 813/2013]
6 Average sound pressure level at 10m distance, unit in a free field on a reflective surface; non-binding value calculated from the sound power level.
7 Sound power on the basis of measurements made in compliance with ISO 9614.
8 Sound power level in cooling, outdoors.
9 Sound power level in heating, outdoors.
10 Unit performance with inverter compressor at nominal speed.
11 Unit in standard configuration/execution, without optional accessories.
12 Seasonal energy efficiency of the cooling environment [REGULATION (EU) N. 2016/2281]
13 Seasonal space heating energy index
14 Seasonal energy efficiency of the space cooling
15 Seasonal performance coefficient
16 Seasonal space heating energy efficiency
The units highlighted in this publication contain HFC R134a [GWP_{100} 1430] fluorinated greenhouse gases.

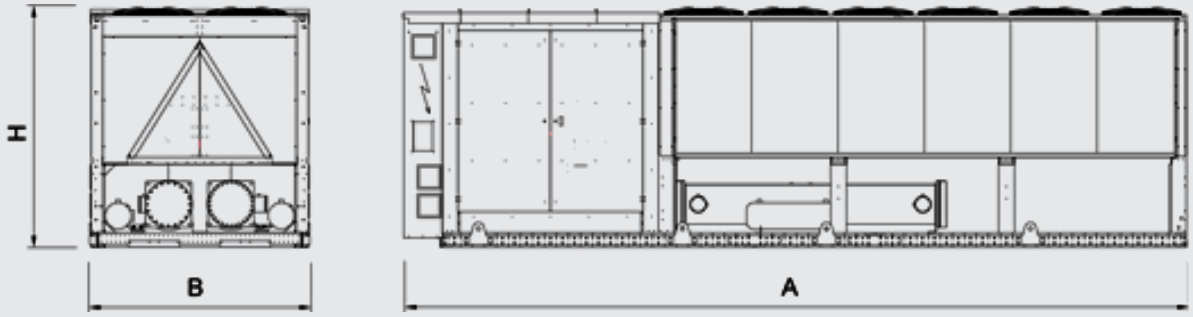
H
B
A

UNITS FOR SIMULTANEOUS AND INDEPENDENT PRODUCTION OF HOT AND COLD WATER

NECS-WQ 0152 - 1204

INTEGRA unit for 4-pipe systems, water source 48,4-412 kW



Version

B Basic

Features

REFRIGERANT GAS R410A

The use of R410A allowed to achive better energy efficiencies with environment full respect (ODP = 0)

INTEGRATED CONDENSATION´S CONTROL

A 2 way valve is supplied as standard for the condensing pressure control. For all the applications in which a constant waterflow through the condenser is needed, a 3-way valve option is also available under request.

ENERGY SAVING

Energy saving guaranteed by the advanced operation's logic. The best operation mode is set completely automatically and independently by the unit's controller, in order to minimize the absorbed energy whatever the cooling and/or heating demand might be

HOT WATER SUPPLY

Production of hot water up to 55°C to meet the most demanding application needs.

Accessory

- Remote control keyboard (distance to 200m and to 500m)
- Set-up for remote connectivity with ModBus, Echelon LonTalk, Bacnet protocol board
- Acoustical enclosure to reduce the noise emissions.
- Water connections directed upwards (for 2 compressors units only)

Multi-purpose indoor unit for use in 4-pipe systems for the simultaneous production of chilled and hot water by means of two independent water circuits. These units are able to satisfy the demand for hot and cold water simultaneously through a system that does not require seasonal switching. Water-source unit equipped with hermetic rotary Scroll compressors, with R410A, plate heat exchangers and thermostatic expansion valve. The range is composed by units equipped with two and four compressors, all with two independent refrigerant circuits.

Controls

W3000 large

The controller W3000 large offers the latest control and functions developed directly by Climaveneta on the basis of their experience gained over the years with these particular units and the related plant engineering. The keypad is generously sized with full operating status display. The controls and detailed LCD make access to machine settings easy and safe. Temperature regulation managed on the two water circuits, with a proportional logic referred to the return water temperatures. This allows to satisfy simultaneously the different heating- and cooling requests, with no need of mode changeover. The diagnostics includes full management of alarms with black-box functions and alarm record for better analysis of unit performance. Supervision is easy through Climaveneta devices or with various options for interfacing to ModBus, Bacnet, Echelon LonTalk protocols. Compatibility with remote keyboard (management up to 10 units). Clock available with programming of operation (standard 4 days and 10 time bands). Exclusive self-adaptive defrost logic, monitoring multiple operational- and ambient parameters, which allows to reduce the number and duration of the defrost cycles, with a benefit for the overall energy efficiency.



NECS-WQ			0152	0182	0202	0252	0262	0302	0412	0512
Power supply		V/ph/Hz	400/3/50	400/3/50	400/3/50	400/3/50	400/3/50	400/3/50	400/3/50	400/3/50
PERFORMANCE										
COOLING ONLY (GROSS VALUE)										
Cooling capacity	(1)	kW	48,4	55,6	64,6	73,4	82,8	97,0	127	158
Total power input	(1)	kW	8,56	9,73	11,2	13,2	14,7	17,4	22,8	28,2
EER	(1)	kW/kW	5,65	5,71	5,77	5,56	5,63	5,57	5,56	5,59
COOLING ONLY (EN14511 VALUE)										
Cooling capacity	(1)(2)	kW	48,2	55,4	64,3	73,1	82,4	96,6	126	157
EER	(1)(2)	kW/kW	5,45	5,53	5,59	5,39	5,45	5,40	5,38	5,41
HEATING ONLY (GROSS VALUE)										
Total heating capacity	(3)	kW	52,1	59,7	69,3	79,0	88,9	104	135	169
Total power input	(3)	kW	12,4	13,8	16,2	18,5	20,4	23,9	31,0	38,4
COP	(3)	kW/kW	4,20	4,33	4,28	4,27	4,36	4,37	4,35	4,40
HEATING ONLY (EN14511 VALUE)										
Total heating capacity	(2)(3)	kW	52,4	60,0	69,6	79,4	89,3	105	136	170
COP	(2)(3)	kW/kW	4,10	4,23	4,19	4,18	4,26	4,27	4,25	4,30
COOLING WITH TOTAL HEAT RECOVERY										
Cooling capacity	(4)	kW	40,4	46,7	54,1	61,7	69,7	82,0	106	133
Total power input	(4)	kW	12,4	13,8	16,2	18,5	20,4	23,9	31,0	38,4
Recovery heat exchanger capacity	(4)	kW	52,1	59,7	69,3	79,0	88,9	104	135	169
TER		kW/kW	7,46	7,71	7,62	7,61	7,77	7,80	7,75	7,85
ENERGY EFFICIENCY										
SEASONAL EFFICIENCY IN COOLING (Reg. EU 2016/2281)										
Ambient refrigeration										
Prated,c	(11)	kW	-	-	-	-	-	-	-	-
SEER	(11)(12)		-	-	-	-	-	-	-	-
Performance ηs	(11)(13)	%	-	-	-	-	-	-	-	-
SEASONAL EFFICIENCY IN HEATING (Reg. EU 813/2013)										
PDesign	(5)	kW	62,2	71,1	82,8	94,4	106	125	162	202
SCOP	(5)(14)		5,71	5,88	5,93	5,74	5,79	5,79	5,73	5,72
Performance ηs	(5)(15)	%	220	227	229	222	224	224	221	221
Seasonal efficiency class	(5)		A++	-	-	-	-	-	-	-
EXCHANGERS										
HEAT EXCHANGER USER SIDE IN REFRIGERATION										
Water flow	(1)	l/s	2,31	2,66	3,09	3,51	3,96	4,64	6,06	7,54
Pressure drop	(1)	kPa	28,4	25,6	25,0	28,7	31,9	33,8	39,1	42,4
HEAT EXCHANGER SOURCE SIDE IN REFRIGERATION										
Water flow	(1)	l/s	0,85	0,97	1,13	1,28	1,45	1,70	2,22	2,76
Pressure drop	(1)	kPa	3,79	3,42	3,32	3,85	4,26	4,53	5,25	5,68
HEAT EXCHANGER USER SIDE IN HEATING										
Water flow	(4)	l/s	2,51	2,88	3,35	3,82	4,29	5,04	6,51	8,15
Pressure drop	(4)	kPa	33,5	30,1	29,3	34,0	37,5	39,8	45,1	49,5
HEAT EXCHANGER SOURCE SIDE IN HEATING										
Water flow	(3)	l/s	1,38	1,60	1,85	2,11	2,38	2,80	3,61	4,53
Pressure drop	(3)	kPa	10,1	9,25	8,95	10,4	11,5	12,3	13,9	15,3
REFRIGERANT CIRCUIT										
Compressors nr.		N°	2	2	2	2	2	2	2	2
No. Circuits		N°	2	2	2	2	2	2	2	2
Refrigerant charge		kg	5,60	6,40	7,40	8,20	8,80	10,0	14,0	16,4
NOISE LEVEL										
Sound Pressure	(6)	dB(A)	42	43	43	43	44	45	46	47
Sound power level in cooling	(7)(8)	dB(A)	73	74	74	74	75	76	77	78
Sound power level in heating	(7)(9)	dB(A)	73	74	74	74	75	76	77	78
SIZE AND WEIGHT										
A	(10)	mm	1220	1220	1220	1220	1220	1220	1220	1220
B	(10)	mm	877	877	877	877	877	877	877	877
H	(10)	mm	1496	1496	1496	1496	1496	1496	1496	1496
Operating weight	(10)	kg	450	470	490	505	525	550	745	825

Notes:
1 Plant (side) cooling exchanger water (in/out) 12°C/7°C; Source (side) heat exchanger water (in/out) 14°C/30°C.
2 Values in compliance with EN14511-3:2013.
3 Plant (side) heat exchanger water (in/out) 40°C/45°C; Source (side) heat exchanger water (in/out) 14°C/7°C.
4 Plant (side) cooling exchanger water (in/out) 12°C/7°C; Plant (side) heat exchanger water (in/out) 40°C/45°C.
5 Seasonal space heating energy efficiency class LOW TEMPERATURE in AVERAGE climate conditions [REGULATION (EU) N. 813/2013]
6 Average sound pressure level at 10m distance, unit in a free field on a reflective surface; non-binding value calculated from the sound power level.
7 Sound power on the basis of measurements made in compliance with ISO 9614.
8 Sound power level in cooling, indoors.
9 Sound power level in heating, indoors.
10 Unit in standard configuration/execution, without optional accessories.
11 Seasonal energy efficiency of the cooling environment [REGULATION (EU) N. 2016/2281]
12 Seasonal space heating energy index
13 Seasonal energy efficiency of the space cooling
14 Seasonal performance coefficient
15 Seasonal space heating energy efficiency
The units highlighted in this publication contain HFC R410A [GWP_{100} 2088] fluorinated greenhouse gases.

NECS-WQ			0612	0604	0704	0804	0904	1004	1104	1204
Power supply		V/ph/Hz	400/3/50	400/3/50	400/3/50	400/3/50	400/3/50	400/3/50	400/3/50	400/3/50
PERFORMANCE										
COOLING ONLY (GROSS VALUE)										
Cooling capacity	(1)	kW	205	193	224	254	284	315	363	412
Total power input	(1)	kW	36,6	34,7	40,1	45,5	50,9	56,4	64,8	73,0
EER	(1)	kW/kW	5,60	5,57	5,59	5,59	5,58	5,59	5,60	5,64
COOLING ONLY (EN14511 VALUE)										
Cooling capacity	(1)(2)	kW	204	192	223	253	283	314	362	410
EER	(1)(2)	kW/kW	5,43	5,40	5,43	5,43	5,43	5,44	5,45	5,49
HEATING ONLY (GROSS VALUE)										
Total heating capacity	(3)	kW	219	208	240	270	303	338	388	440
Total power input	(3)	kW	49,9	47,7	54,7	61,8	69,2	76,8	88,4	99,6
COP	(3)	kW/kW	4,39	4,36	4,38	4,37	4,38	4,40	4,39	4,41
HEATING ONLY (EN14511 VALUE)										
Total heating capacity	(2)(3)	kW	220	209	241	271	305	339	390	442
COP	(2)(3)	kW/kW	4,29	4,27	4,29	4,28	4,30	4,31	4,31	4,33
COOLING WITH TOTAL HEAT RECOVERY										
Cooling capacity	(4)	kW	172	163	188	212	238	266	305	346
Total power input	(4)	kW	49,9	47,7	54,7	61,8	69,2	76,8	88,4	99,6
Recovery heat exchanger capacity	(4)	kW	219	208	240	270	303	338	388	440
TER		kW/kW	7,83	7,79	7,82	7,80	7,83	7,86	7,84	7,89
ENERGY EFFICIENCY										
SEASONAL EFFICIENCY IN COOLING (Reg. EU 2016/2281)										
Ambient refrigeration										
Prated,c	(11)	kW	-	-	-	-	-	297	342	387
SEER	(11)(12)		-	-	-	-	-	5,14	5,24	5,25
Performance ηs	(11)(13)	%	-	-	-	-	-	198	202	202
SEASONAL EFFICIENCY IN HEATING (Reg. EU 813/2013)										
PDesign	(5)	kW	262	248	289	325	360	-	-	-
SCOP	(5)(14)		5,76	5,80	5,65	5,77	5,93	-	-	-
Performance ηs	(5)(15)	%	222	224	218	223	229	-	-	-
Seasonal efficiency class	(5)		-	-	-	-	-	-	-	-
EXCHANGERS										
HEAT EXCHANGER USER SIDE IN REFRIGERATION										
Water flow	(1)	l/s	9,79	9,24	10,72	12,16	13,58	15,08	17,35	19,69
Pressure drop	(1)	kPa	44,0	41,7	44,1	43,7	43,0	43,9	43,7	44,2
HEAT EXCHANGER SOURCE SIDE IN REFRIGERATION										
Water flow	(1)	l/s	3,58	3,38	3,93	4,45	4,97	5,52	6,35	7,20
Pressure drop	(1)	kPa	5,89	5,60	5,91	5,85	5,77	5,89	5,86	5,91
HEAT EXCHANGER USER SIDE IN HEATING										
Water flow	(4)	l/s	10,57	10,05	11,56	13,04	14,64	16,30	18,74	21,22
Pressure drop	(4)	kPa	51,2	49,3	51,3	50,2	50,0	51,3	51,0	51,4
HEAT EXCHANGER SOURCE SIDE IN HEATING										
Water flow	(3)	l/s	5,88	5,58	6,43	7,24	8,14	9,07	10,42	11,82
Pressure drop	(3)	kPa	15,8	15,2	15,8	15,5	15,5	15,9	15,8	15,9
REFRIGERANT CIRCUIT										
Compressors nr.		N°	2	4	4	4	4	4	4	4
No. Circuits		N°	2	2	2	2	2	2	2	2
Refrigerant charge		kg	21,2	22,6	25,0	30,4	31,2	33,2	37,4	40,2
NOISE LEVEL										
Sound Pressure	(6)	dB(A)	48	54	55	56	57	58	59	59
Sound power level in cooling	(7)(8)	dB(A)	79	86	87	88	89	90	91	91
Sound power level in heating	(7)(9)	dB(A)	79	86	87	88	89	0	0	0
SIZE AND WEIGHT										
A	(10)	mm	1220	2560	2560	2560	2560	2560	2560	2560
B	(10)	mm	877	891	891	891	891	891	891	891
H	(10)	mm	1496	1810	1810	1810	1810	1810	1810	1810
Operating weight	(10)	kg	910	975	1165	1365	1445	1610	1710	1810

Notes:
1 Plant (side) cooling exchanger water (in/out) 12°C/7°C; Source (side) heat exchanger water (in/out) 14°C/30°C.
2 Values in compliance with EN14511-3:2013.
3 Plant (side) heat exchanger water (in/out) 40°C/45°C; Source (side) heat exchanger water (in/out) 14°C/7°C.
4 Plant (side) cooling exchanger water (in/out) 12°C/7°C; Plant (side) heat exchanger water (in/out) 40°C/45°C.
5 Seasonal space heating energy efficiency class LOW TEMPERATURE in AVERAGE climate conditions [REGULATION (EU) N. 813/2013]
6 Average sound pressure level at 10m distance, unit in a free field on a reflective surface; non-binding value calculated from the sound power level.
7 Sound power on the basis of measurements made in compliance with ISO 9614.
8 Sound power level in cooling, indoors.
9 Sound power level in heating, indoors.
10 Unit in standard configuration/execution, without optional accessories.
11 Seasonal energy efficiency of the cooling environment [REGULATION (EU) N. 2016/2281]
12 Seasonal space heating energy index
13 Seasonal energy efficiency of the space cooling
14 Seasonal performance coefficient
15 Seasonal space heating energy efficiency
The units highlighted in this publication contain HFC R410A [GWP_{100} 2088] fluorinated greenhouse gases.

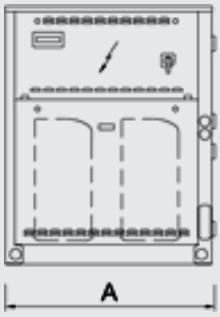
A


H
B

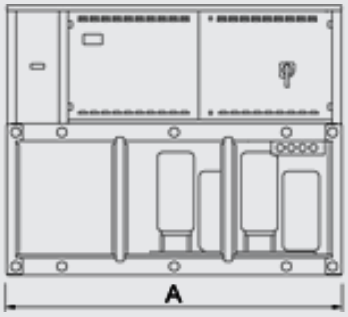
A

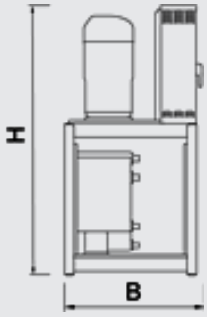
H
B

UNITS FOR SIMULTANEOUS AND INDEPENDENT PRODUCTION OF HOT AND COLD WATER

ERACS2-WQ 0802 - 1502

INTEGRA unit for 4-pipe systems, water source 189-363 kW



Multi-purpose indoor unit for use in 4-pipe systems for the simultaneous production of chilled and hot water by means of two independent water circuits. These units are able to satisfy the demand for hot and cold water simultaneously through a system that does not require seasonal switching. Each circuit works with a semi-hermetic screw compressor using R134a, and three tube nest heat exchangers, a cold exchanger on the user side shared by both circuits that acts as an evaporator in the production of cold water, a heat exchanger on the user side that words as a condenser in the production of hot water, and a source side exchanger that works as either condenser or evaporator as required by the loads.

Version

- Basic

Features

UNIQUE PROPOSAL

Unit designed to satisfy the cold and the hot side requirements simultaneously, for 4-pipe systems without any particular operation mode setting

ENERGY SAVING

Energy saving guaranteed by the advanced operation's logic. The best operation mode is set completely automatically and independently by the unit's controller, in order to minimize the absorbed energy whatever the cooling and/or heating demand might be

WIDE OPERATING RANGE

Supply of hot water in use up to 55°C, offering maximum versatility with respect to different plant engineering solutions

INTEGRATED CONDENSATION´S CONTROL

A 2 way valve is supplied as standard for the condensing pressure control. For all the applications in which a constant waterflow through the condenser is needed, a 3-way valve option is also available under request.

Accessory

- Integral acoustical enclosure (type base or plus)
- Several devices for condensation´s control
- Electronic expansion valve
- Set-up for remote connectivity with ModBus/Echelon protocol cards

Controls

Electronic control W3000TE

The W3000TE controller offers advanced functions and algorithms.

The LARGE keyboard with a large format and the wide LCD display favour an easy and safe access to the machine setup and a complete view of unit's staus. The assessment and intervention on the unit is managed through a multi-level menu, with selectable user's language. The led icons immediately show the operating status of the circuits, as well as of the fans and of the water pumps (if present). In addition to or as an alternative at Large Keyboard, the KIPlink - Keyboard In Your Pocket - is the innovative user interface based on WiFi technology that allows one to operate on the unit directly from the smartphone or tablet.

The regulation operates on both water circuits featuring the step-wise regulation referred to the return water temperature with proportional logic. This allows to satisfy simultaneously the different requests of both cooling and heating, with no need of mode setting.

The diagnostics comprises a complete alarm management system, with the "black-box" (via PC) and the alarm history display (via display or also PC) for enhanced analysis of the unit operation

Optional proprietary devices can perform the adjustment of the resources in systems made of several units. Consumption metering and performance measurement are possible as well.

Supervision can be easily developed via proprietary devices or the integration in third party systems by means of the most common protocols as ModBus, Bacnet, Bacnet-over-IP, LonWorks.

Compatibility with the remote keyboard (up to 8 units).

The programmable timer manages a weekly schedule organised into time bands to optimise unit performance by minimising power consumption during periods of inactivity. Up to 10 daily time bands can be associated with different operating set points.

The defrosting (air source reversible unit only) follows a proprietary self-adaptive logic, which features the monitoring of several operational parameters. This allows to reduce the number and duration of the defrost cycles, with a benefit for the overall energy efficiency.



ERACS2-WQ			0802	1002	1102	1302	1502
Power supply		V/ph/Hz	400/3/50	400/3/50	400/3/50	400/3/50	400/3/50
PERFORMANCE							
COOLING ONLY (GROSS VALUE)							
Cooling capacity	(1)	kW	189	234	268	318	363
Total power input	(1)	kW	35,7	44,9	50,6	59,7	68,7
EER	(1)	kW/kW	5,31	5,22	5,30	5,32	5,29
COOLING ONLY (EN14511 VALUE)							
Cooling capacity	(1)(2)	kW	189	233	267	317	362
EER	(1)(2)	kW/kW	5,19	5,09	5,15	5,20	5,18
HEATING ONLY (GROSS VALUE)							
Total heating capacity	(3)	kW	205	255	291	344	393
Total power input	(3)	kW	45,7	56,9	65,8	76,3	86,9
COP	(3)	kW/kW	4,49	4,48	4,43	4,51	4,52
HEATING ONLY (EN14511 VALUE)							
Total heating capacity	(2)(3)	kW	206	256	293	346	394
COP	(2)(3)	kW/kW	4,42	4,40	4,33	4,42	4,44
COOLING WITH TOTAL HEAT RECOVERY							
Cooling capacity	(4)	kW	162	201	229	272	311
Total power input	(4)	kW	45,7	56,9	65,8	76,3	86,9
Recovery heat exchanger capacity	(4)	kW	205	255	291	344	393
TER		kW/kW	8,05	8,01	7,91	8,08	8,10
ENERGY EFFICIENCY							
SEASONAL EFFICIENCY IN COOLING (Reg. EU 2016/2281)							
Ambient refrigeration							
Prated,c	(12)	kW	-	-	-	-	349
SEER	(12)(13)		-	-	-	-	5,15
Performance ηs	(12)(14)	%	-	-	-	-	198
SEASONAL EFFICIENCY IN HEATING (Reg. EU 813/2013)							
PDesign	(5)	kW	249	309	353	418	-
SCOP	(5)(15)		5,59	5,56	5,18	5,45	-
Performance ηs	(5)(16)	%	215	214	199	210	-
Seasonal efficiency class	(5)		-	-	-	-	-
PDesign	(6)	kW	220	274	315	368	
SCOP	(6)(15)		4,33	4,46	3,97	4,26	
Performance ηs	(6)(16)	%	165	170	151	162	
Seasonal efficiency class	(6)		-	-	-	-	-
EXCHANGERS							
HEAT EXCHANGER USER SIDE IN REFRIGERATION							
Water flow	(1)	l/s	9,06	11,20	12,82	15,20	17,38
Pressure drop	(1)	kPa	27,6	34,9	46,8	40,4	36,5
HEAT EXCHANGER SOURCE SIDE IN REFRIGERATION							
Water flow	(1)	l/s	3,34	4,14	4,73	5,61	6,41
Pressure drop	(1)	kPa	3,76	4,78	6,38	5,50	4,98
HEAT EXCHANGER USER SIDE IN HEATING							
Water flow	(4)	l/s	9,91	12,30	14,06	16,61	18,96
Pressure drop	(4)	kPa	33,1	42,1	56,3	48,3	43,5
HEAT EXCHANGER SOURCE SIDE IN HEATING							
Water flow	(3)	l/s	5,55	6,88	7,83	9,31	10,63
Pressure drop	(3)	kPa	10,4	13,2	17,5	15,2	13,7
REFRIGERANT CIRCUIT							
Compressors nr.		N°	2	2	2	2	2
No. Circuits		N°	2	2	2	2	2
Refrigerant charge		kg	46,0	56,0	56,0	58,0	75,0
NOISE LEVEL							
Sound Pressure	(7)	dB(A)	62	63	65	65	65
Sound power level in cooling	(8)(9)	dB(A)	94	95	97	97	97
Sound power level in heating	(8)(10)	dB(A)	94	95	97	97	0
SIZE AND WEIGHT							
A	(11)	mm	3680	3680	3680	3680	3680
B	(11)	mm	1170	1170	1170	1170	1170
H	(11)	mm	1950	1950	1950	1950	1950
Operating weight	(11)	kg	2420	2470	2880	3580	3690

Notes:
1 Plant (side) cooling exchanger water (in/out) 12°C/7°C; Source (side) heat exchanger water (in/out) 14°C/30°C.
2 Values in compliance with EN14511-3:2013.
3 Plant (side) heat exchanger water (in/out) 40°C/45°C; Source (side) heat exchanger water (in/out) 14°C/7°C.
4 Plant (side) cooling exchanger water (in/out) 12°C/7°C; Plant (side) heat exchanger water (in/out) 40°C/45°C.
5 Seasonal space heating energy efficiency class LOW TEMPERATURE in AVERAGE climate conditions [REGULATION (EU) N. 813/2013]
6 Seasonal space heating energy efficiency class MEDIA TEMPERATURE in AVERAGE climate conditions [REGULATION (EU) N. 813/2013]
7 Average sound pressure level at 10m distance, unit in a free field on a reflective surface; non-binding value calculated from the sound power level.
8 Sound power on the basis of measurements made in compliance with ISO 9614.
9 Sound power level in cooling, indoors.
10 Sound power level in heating, indoors.
11 Unit in standard configuration/execution, without optional accessories.
12 Seasonal energy efficiency of the cooling environment [REGULATION (EU) N. 2016/2281]
13 Seasonal space heating energy index
14 Seasonal energy efficiency of the space cooling
15 Seasonal performance coefficient
16 Seasonal space heating energy efficiency
The units highlighted in this publication contain HFC R134a [GWP_{100} 1430] fluorinated greenhouse gases.

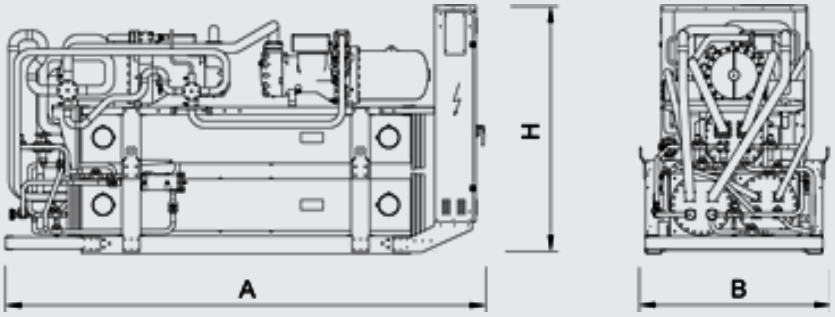
H
A
B

<<< BACK INDEX

WSM-T 0082 - 0152
WSM-T 0162 - 1204
WRX-T 0162 - 0804
WSM2-T 0264 - 0604
WSM A082 - A152
WSM A164 - A1004
WRX 0162 - 0804
WSM2 0264 - 0604

ROOFTOP UNITS

ROOFTOP UNITS

ROOFTOP UNITS

WSM-T 0082 - 0152

Cooling only air cooled Rooftop unit, fully configurable and high efficiency 23,4-55,0 kW



Autonomous cooling only air-to-air Rooftop unit, for the thermo-hygrometric treatment, filtration and air renovation, depending on the selected configuration. Mini WSM-T units are specifically designed for installation in small to medium sized spaces, such as shops, bars and service areas. Hermetic rotary scroll compressors with R410A refrigerant; single refrigerant circuit; aluminum structure and coated galvanized steel base; air treatment section with sandwich panel and EC plug fans. According to the selected version, the unit allows for the management of free cooling, with supply and return fans with motorized dampers for return, expulsion and fresh air. The unit is also available with the heat recovery Refrigerant Booster to recover the energy from the exhaust air, increasing the units capacity and the global efficiency.

Configurations

AR	Air recirculation function
MF	Mixing and Free cooling function
CE	Function with fans for extraction and expulsion and Free cooling
HR-B	Heat Recovery Refrigerant Booster function: air extractor fan(s), free cooling function and heat recovery from exhaust air flow thanks to Refrigerant Booster coil

Features

FLEXIBILITY

Climaveneta's units offer the opportunity to choose different supply and return airflows directions.

REDUCED FOOTPRINT

One single packaged unit that encloses everything is required for the ambient air conditioning. Particular attention has been given to the structural design of the unit, providing a smaller footprint combined with flexibility, sturdiness and complete operation.

VERSATILITY

Different possibilities for the air treatment chambers; from total recirculation only to mixing with fresh air and extraction from the ambient with heat recovery. Each different configuration can be further customized thanks to a wide range of accessories.

REFRIGERANT BOOSTER

Cutting-edge Refrigerant booster heat recovery system that allows for the complete and precise recovery of the energy from the exhaust air, without any waste due to the mixing with external air. The performance of the cooling circuit is maximized, increasing by 15% the cooling capacity and the compressor working at the same condition.

INSTALLATION AND MAINTENANCE

Simplified operations, reduced costs and maintenance directly on site thanks to: the strong and perfectly insulated structure, easy access to internal sections, plug & play approach and automatic setting of the air flow (optional).

Accessory

- Ambient humidity control: hot gas post heating coil and humidifer.
- Ambient air quality control: CO2 sensor or 4-20 mA remote signal.
- Integration or substitution heating resources: hot water heating coil, electrical heaters, gas heating module
- High efficiency filters: electronic or rigid pocket F7
- Enthalpy free-cooling
- Remote control keyboard (distance to 200m and to 500m)
- Set-up for remote connectivity with ModBus/Echelon protocol cards

Controls

AIR3000TE

The AIR3000 TE controller offers advanced functions and algorithms. It is made up by two control boards, dedicated to the air side and the refrigerant side respectively. The keypad features functional controls and a complete LCD display that allows for the monitoring and intervention on the unit by means of a multi-level menu with selectable user´s language. The step proportional capacity adjustment is based on the return temperature; proportional-integral management can also be set. Its functions include the adjustment of the ambient humidity, the thermal or enthalpic (optional) free-cooling and supply temperature limitation. Defrosting is based on a self-adaptive propriety logic with monitoring of several operating and environmental parameters. The management of the ventilation can be realized with constant air flow regulation (optional): as pressure drop varies, the fans change speed so as to maintain the flow-rate at the designed value for the system, regardless of filter clogging. The controller allows to integrate and automatically manage different optional thermal resources (hot water coil, electrical heater and gas thermal module), hot gas post-heating (optional) and the fresh air percentage (optional with CO2 sensor or remote signal 4-20 mA). The presence of the programmable timer allows the user to create an operating profile containing up to 4 typical days and 10 time bands.
The diagnostics comprises a complete alarm management system, including 'black box' (via PC) functions and an alarm log list (via display or also a PC) for optimized analysis of the unit performance. Supervision can be easily developed via proprietary devices or via third party systems by means of the most common protocols as ModBus, Bacnet, Bacnet-over-IP, Echelon LonWorks protocols. Compatibility with the remote keyboard managing up to 8 units.



WSM-T			0082	0092	0102	0121	0122	0131	0132	0151	0152
Power supply		V/ph/Hz	400/3/50	400/3/50	400/3/50	400/3/50	400/3/50	400/3/50	400/3/50	400/3/50	400/3/50
COOLING											
Total cooling capacity	(1)	kW	23,4	28,7	32,9	37,5	37,6	41,3	42,5	47,7	47,6
Total sensible capacity	(1)	kW	18,1	22,3	25,8	28,5	28,5	32,6	33,2	37,8	37,8
Compressors power input	(1)	kW	5,19	6,85	8,06	9,79	10,0	10,5	12,0	12,3	12,4
EER (total)	(1)	kW/kW	3,05	2,96	3,05	2,98	2,94	3,04	2,81	3,00	2,98
SEASONAL EFFICIENCY IN COOLING (Reg. EU 2016/2281)											
Ambient refrigeration											
Prated,c	(2)	kW	23,6	28,9	33,2	37,7	37,8	41,6	42,8	48,1	48,0
SEER	(2)		3,02	3,12	3,34	3,04	3,39	3,13	3,36	3,11	3,38
Performance ηs	(2)	%	117,79	122,00	130,66	118,54	132,49	122,01	131,24	121,52	132,34
SUPPLY FANS											
Supply air flow rate		m³/h	4000	5000	5700	6000	6000	7250	7250	8500	8500
External static pressure	(3)	Pa	250	250	250	250	250	250	250	250	250
Total power input		kW	0,69	1,04	0,93	0,96	0,96	1,32	1,32	1,78	1,78
REFRIGERANT CIRCUIT											
No. Compressors/No. Circuits		N°	2/1	2/1	2/1	1/1	2/1	1/1	2/1	1/1	2/1
Refrigerant charge		kg									
NOISE LEVEL											
Sound Power	(4)	dB(A)	79	80	82	83	83	82	82	85	85
SIZE											
Length A		mm	2055	2055	2055	2055	2055	2055	2055	2055	2055
Width B		mm	1300	1300	1300	1300	1300	1300	1300	1300	1300
Height H		mm	1640	1640	1640	1640	1640	1640	1640	1640	1640
Operating weight	(5)	kg	524	534	565	592	592	622	622	657	657

Notes:
1 Cooling: Outdoor 35°C 50% R.H. / Indoor 27°C 47% R.H. / Mix 0%.
2 Seasonal energy efficiency of the cooling environment [REGULATION (EU) N. 2016/2281]
3 ESP for standard configuration (optional accessories not included/calculated).
4 Sound power on the basis of measurements made in compliance with ISO 9614.
5 Unit in AR configuration and standard execution, without optional accessories.
The units highlighted in this publication contain HFC R410A [GWP_{100} 2088] fluorinated greenhouse gases.

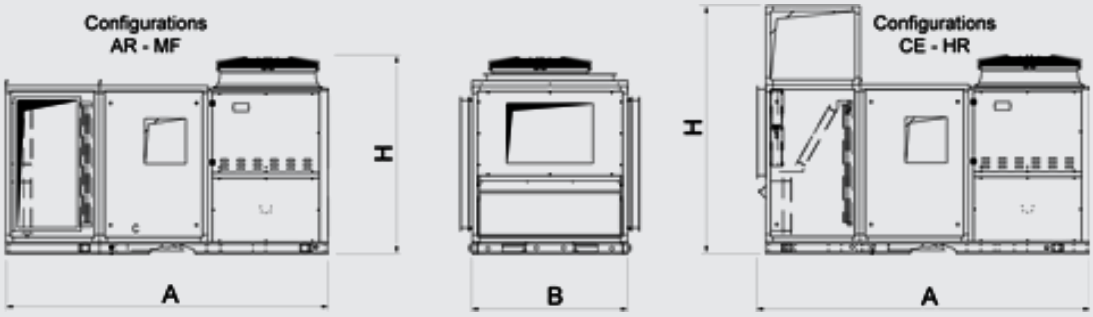

ROOFTOP UNITS

WSM-T 0162 - 1204

Cooling only air cooled Rooftop unit, fully configurable and high efficiency 50,9-422 kW

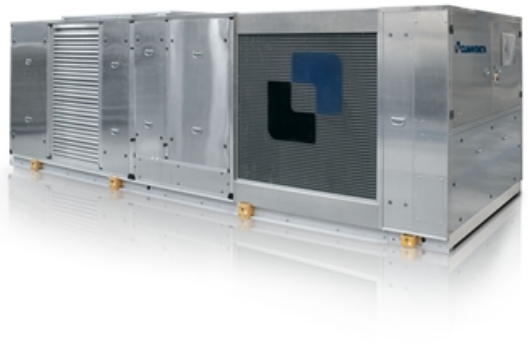

Autonomous cooling only air-to-air Rooftop unit, for the thermo-hygrometric treatment, filtration and air renovation, in medium-large surface and volume ambient, such as supermarkets, shopping or exhibition centres.
Hermetic rotary scroll compressors with R410A refrigerant; double refrigerant circuit; aluminum structure and coated galvanized steel base; air treatment section with sandwich panel and EC plug fans. According to the selected version, the unit allows for the management of free cooling, with supply and return fans with motorized dampers for return, expulsion and fresh air. The unit is also available with the thermodynamic Refrigerant Booster heat recovery or air-to air Plate type, to recover the energy from the exhaust air, increasing the units capacity and the global efficiency.

Configurations

AR	Air recirculation function
MF	Mixing and Free cooling function
CE	Function with fans for extraction and expulsion and Free cooling
HR-B	Heat Recovery Refrigerant Booster function: air extractor fan(s), free cooling function and heat recovery from exhaust air flow thanks to Refrigerant Booster coil
HR-P	Heat Recovery Plate function: air extractor fan(s), free cooling function and heat recovery from exhaust air flow thanks to Plate heat Exchanger.

Features

FLEXIBILITY

Climaveneta's units offer the opportunity to choose different supply and return airflows directions.

HIGH RELIABILITY

The wide working range, the double refrigerant circuit and the accurate design of the components ensure optimum performance and comfort, with a continuous and constant operation also during heavy thermoigrometric conditions.

VERSATILITY

Different possibilities for the air treatment chambers; from total recirculation only to mixing with fresh air and extraction from the ambient with heat recovery. Each different configuration can be further customized thanks to a wide range of accessories.

REFRIGERANT BOOSTER

Cutting-edge Refrigerant booster heat recovery system that allows for the complete and precise recovery of the energy from the exhaust air, without any waste due to the mixing with external air. The performance of the cooling circuit is maximized, increasing by 15% the cooling capacity and the compressor working at the same condition.

INSTALLATION AND MAINTENANCE

Simplified operations, reduced costs and maintenance directly on site thanks to: the strong and perfectly insulated structure, easy access to internal sections, plug & play approach and automatic setting of the air flow (optional).

Accessory

- Ambient humidity control: hot gas post heating coil and humidifer.
- Ambient air quality control: CO2 sensor or 4-20 mA remote signal.
- Integration or substitution heating resources: hot water heating coil, electrical heaters, gas heating module
- High efficiency filters: electronic or rigid pocket F7
- Enthalpy free-cooling
- Remote control keyboard (distance to 200m and to 500m)
- Set-up for remote connectivity with ModBus/Echelon protocol cards

Controls

AIR3000TE

The AIR3000 TE controller offers advanced functions and algorithms. It is made up by two control boards, dedicated to the air side and the refrigerant side respectively. The keypad features functional controls and a complete LCD display that allows for the monitoring and intervention on the unit by means of a multi-level menu with selectable user´s language. The step proportional capacity adjustment is based on the return temperature; proportional-integral management can also be set. Its functions include the adjustment of the ambient humidity, the thermal or enthalpic (optional) free-cooling and supply temperature limitation. Defrosting is based on a self-adaptive propriety logic with monitoring of several operating and environmental parameters. The management of the ventilation can be realized with constant air flow regulation (optional): as pressure drop varies, the fans change speed so as to maintain the flow-rate at the designed value for the system, regardless of filter clogging. The controller allows to integrate and automatically manage different optional thermal resources (hot water coil, electrical heater and gas thermal module), hot gas post-heating (optional) and the fresh air percentage (optional with CO2 sensor or remote signal 4-20 mA). The presence of the programmable timer allows the user to create an operating profile containing up to 4 typical days and 10 time bands.
The diagnostics comprises a complete alarm management system, including 'black box' (via PC) functions and an alarm log list (via display or also a PC) for optimized analysis of the unit performance. Supervision can be easily developed via proprietary devices or via third party systems by means of the most common protocols as ModBus, Bacnet, Bacnet-over-IP, Echelon LonWorks protocols. Compatibility with the remote keyboard managing up to 8 units.



WSM-T			0162	0182	0202	0704	0804	0904	1004	1104	1204
Power supply		V/ph/Hz	400/3/50	400/3/50	400/3/50	400/3/50	400/3/50	400/3/50	400/3/50	400/3/50	400/3/50
COOLING											
Total cooling capacity	(1)	kW	50,9	59,4	64,4	219	245	266	304	334	365
Total sensible capacity	(1)	kW	38,5	45,8	49,9	172	195	214	242	259	277
Compressors power input	(1)	kW	12,5	15,4	17,0	59,1	69,8	70,0	78,3	91,1	105
EER (total)	(1)	kW/kW	3,24	3,13	3,07	2,99	2,85	2,91	2,98	2,88	2,79
SEASONAL EFFICIENCY IN COOLING (Reg. EU 2016/2281)											
Ambient refrigeration											
Prated,c	(2)	kW	51,3	59,8	64,9	222	249	270	309	339	370
SEER	(2)		3,01	3,01	3,01	3,72	3,58	3,21	3,25	3,19	3,19
Performance ηs	(2)	%	117,27	117,39	117,39	145,66	140,19	125,28	126,81	124,56	124,72
SUPPLY FANS											
Supply air flow rate		m³/h	7700	9400	10500	36500	42200	50000	54000	56000	56000
External static pressure	(3)	Pa	250	250	250	250	250	250	250	250	250
Total power input		kW	1,09	1,48	1,78	6,87	8,90	10,8	13,0	14,0	14,5
REFRIGERANT CIRCUIT											
No. Compressors/No. Circuits		N°	2/2	2/2	2/2	4/2	4/2	4/2	4/2	4/2	4/2
Refrigerant charge		kg									
NOISE LEVEL											
Sound Power	(4)	dB(A)	82	84	85	92	94	97	97	97	97
SIZE											
Length A		mm	3065	3065	3065	5565	5565	7430	7430	7430	7430
Width B		mm	1700	1700	1700	2250	2250	2250	2250	2250	2250
Height H		mm	1660	1660	1660	2380	2380	2380	2380	2380	2380
Operating weight	(5)	kg	753	892	942	2668	2748	3423	3705	3819	3878

Notes:
1 Cooling: Outdoor 35°C 50% R.H. / Indoor 27°C 47% R.H. / Mix 0%.
2 Seasonal energy efficiency of the cooling environment [REGULATION (EU) N. 2016/2281]
3 ESP for standard configuration (optional accessories not included/calculated).
4 Sound power on the basis of measurements made in compliance with ISO 9614.
5 Unit in AR configuration and standard execution, without optional accessories.
The units highlighted in this publication contain HFC R410A [GWP_{100} 2088] fluorinated greenhouse gases.

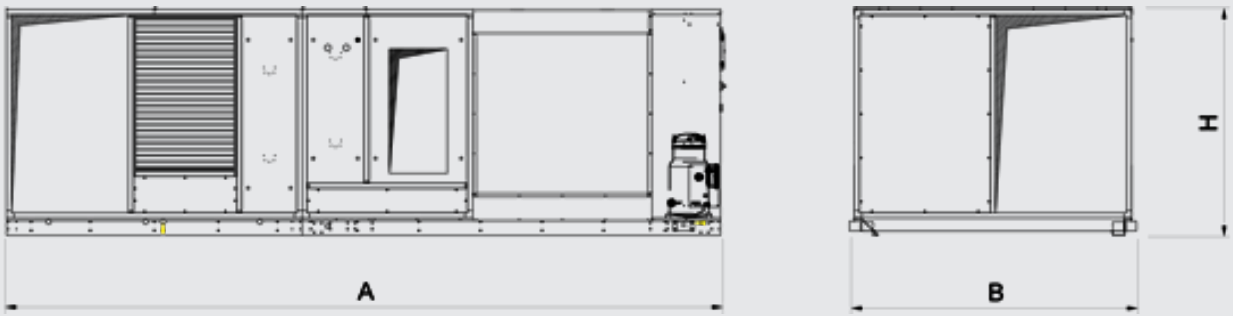

ROOFTOP UNITS

WRX-T 0162 - 0804

Reversible air cooled fully configurable high efficiency Rooftop units
50,8-240 kW



Autonomous reversible air-to-air Rooftop unit, for the thermo-hygrometric treatment, filtration and air renovation, in medium-large surface and volume ambient, such as supermarkets, shopping or exhibition centres.
Hermetic rotary scroll compressors with R410A refrigerant; double refrigerant circuit fitted with Electronic Expansion Valves; EC plug fans are standard on these units.
The structure is specific for outdoor installation, with base and supporting structure made of hot galvanized sheet metal profiles of adequate thickness. The vertical structure and outer panelling are also painted with polyester powders RAL 7035. The air treatment section is insulated internally with a double layer high tech material. The insulation is fixed with specific adhesives to the sheet metal together with mechanical fastenings that guarantee maximum hold over time.
According to the selected version, the unit allows for the management of free cooling, with supply and return fans with motorized dampers for return, expulsion and fresh air.
The unit can be supplied with 4 types of heat recovery: thermodynamic recovery, Refrigerant Booster (an additional refrigerant coil placed on exhaust air flow), air-to air Plate or Rotary, to recover the energy from the exhaust air, increasing unit capacity and the global efficiency.

Configurations

AR	Air recirculation function
MF	Mixing and Free cooling function
AX	Mixing and Free cooling function with Exhaust air Axial fan
HR-F	Heat Recovery Free: air extractor fan(s), free cooling function and thermodynamic heat recovery from exhaust air flow
HR-B	Heat Recovery Refrigerant Booster function: air extractor fan(s), free cooling function and heat recovery from exhaust air flow thanks to Refrigerant Booster coil
HR-P	Heat Recovery Plate function: air extractor fan(s), free cooling function and heat recovery from exhaust air flow thanks to Plate heat Exchanger.
HR-E	Heat Recovery Enthalpy function: air extractor fan(s), free cooling function and heat recovery from exhaust air flow thanks to Rotary Enthalpic Wheel.

Features

HIGH RELIABILITY

The wide working range, the double refrigerant circuit and the accurate design of the components ensure optimum performance and comfort, with a continuous and constant operation also during heavy thermoigrometric conditions.

FLEXIBILITY

Climaveneta's units offer the opportunity to choose different supply and return airflows directions.

VERSATILITY

Different possibilities for the air treatment chambers; from total recirculation only to mixing with fresh air and extraction from the ambient with heat recovery. Each different configuration can be further customized thanks to a wide range of accessories.

HEAT RECOVERY FROM EXHAUST AIR FLOW

Units can be equipped with 4 different heat recovery systems, to address a wide range of needs.

PLUG-FAN VENTILATION

The supply and return plug fans combine the high efficiency of the ventilation section with an easy and fast installation of the unit, both electrical and aeraulic.

Accessory

- Enthalpy free-cooling
- Set-up for remote connectivity with ModBus/Echelon protocol cards
- Air flow regulation with CO2 or CO2+VOC probe
- Integration or substitution heating resources: hot water heating coil, electrical heaters, gas heating module

Controls

AIR3000TE

The AIR3000 TE controller offers advanced functions and algorithms. It is made up by two control boards, dedicated to the air side and the refrigerant side respectively. The keypad features functional controls and a complete LCD display that allows for unit monitoring and intervention by means of a multilevel menu with a selectable user language. Temperature control is based on PID logic according to the supply temperature set point. It is possible to have set point compensation according to outdoor temperature, both in winter and summer. The operating mode of the unit, cooling/heating/free cooling, is managed automatically. Constant air volume ventilation control is standard: as pressure drop varies, the fans change speed to maintain flow-rate at the design value for the system, according to how dirty the filters are. As an option the air flow can be managed according to a CO2 or CO2 + VOC probe. The controller can also integrate and automatically manage different optional devices: pre-treatment coil, electric heater, gas-fired heating module, humidifier. Unloading modulation function is available for part-load refrigerant circuit operation in critical conditions. Supervision is available with different options, using proprietary
devices or by integration with third party systems using ModBus, BACnet, BACnet-over-IP and Echelon LonWorks protocols. Compatible with remote keypad (management of up to 8 units). The timer can be used to create an operating profile with up to 4 typical days and 10 different time bands.



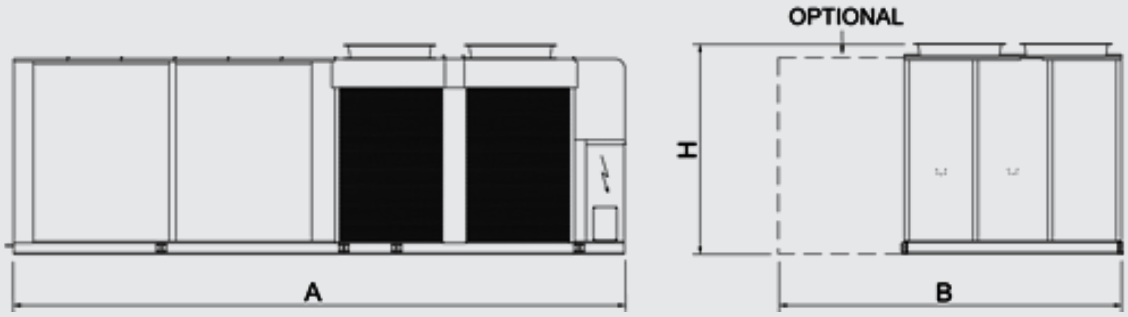
OPTIONAL
H
A
B

ROOFTOP UNITS

WSM2-T 0264 - 0604

Reversible air cooled fully configurable high efficiency Rooftop units
81,1-182 kW



Autonomous cooling only air-to-air Rooftop unit, for the thermo-hygrometric treatment, filtration and air renovation, in medium-large surface and volume ambient, such as supermarkets, shopping or exhibition centres.
Hermetic rotary scroll compressors in tandem with R410A refrigerant; double refrigerant circuit; aluminium structure and coated galvanized steel base; air treatment section with sandwich panel with external surface made with coated galvanized steel RAL 7035 and EC fans.
The condensing side is made with hot galvanized sheet metal painted with polyester powders RAL 7035
According to the selected version, the unit allows for the management of free cooling, with supply and return fans with motorized dampers for return, expulsion and fresh air. The unit is also available with the thermodynamic Refrigerant Booster heat recovery, air-to air Plate type or rotary heat exchanger, to recover the energy from the exhaust air, increasing the units capacity and the global efficiency.

Configurations

AR	Air recirculation function
MF	Mixing and Free cooling function
AX	Mixing and Free cooling function with Exhaust air Axial fan
CE	Function with fans for extraction and expulsion and Free cooling
HR-B	Heat Recovery Refrigerant Booster function: air extractor fan(s), free cooling function and heat recovery from exhaust air flow thanks to Refrigerant Booster coil
HR-P	Heat Recovery Plate function: air extractor fan(s), free cooling function and heat recovery from exhaust air flow thanks to Plate heat Exchanger.
HR-E	Heat Recovery Enthalpy function: air extractor fan(s), free cooling function and heat recovery from exhaust air flow thanks to Rotary Enthalpic Wheel.

Features

ENERGY EFFICENCY
The unit fulfill EU regulation 2016/2281; in particular, the unit is in line with energy efficiency limits starting from January 1st, 2021 (ErP 2021).
HIGH RELIABILITY
The wide working range, the double refrigerant circuit and the accurate design of the components ensure optimum performance and comfort, with a continuous and constant operation also during heavy thermoigrometric conditions.
FLEXIBILITY
Climaveneta's units offer the opportunity to choose different supply and return airflows directions.
ROTARY-TYPE ENTHALPY RECOVERY
The exclusive enthalpic rotary heat recovery allows to recover from the exhaust air both sensible and latent heat, both in winter and summer operation.
The recovery of the latent heat improves the dehumidification capability of the unit in summer and the humidification in winter, with a very high efficiency ratio.
STATIC PLATE HEAT RECOVERY
The static plate heat recovery provides a constant and effective recovery of the sensible energy from the exhaust air. In winter mode the efficency can reach values higher than 50%, that, together with the zero energy consumption of the component, grant an effective energy and economic saving.
REFRIGERANT BOOSTER
Cutting-edge Refrigerant booster heat recovery system that allows for the complete and precise recovery of the energy from the exhaust air, without any waste due to the mixing with external air. The performance of the cooling circuit is maximized, increasing by 15% the cooling capacity and the compressor working at the same condition.
PLUG-FAN VENTILATION
The supply and return plug fans combine the high efficiency of the ventilation section with an easy and fast installation of the unit, both electrical and aeraulic.

Accessory

- Ambient humidity control: hot gas post heating coil and humidifer.
- High efficiency filters: electronic or rigid pocket F7
- Enthalpy free-cooling
- Air flow regulation with CO2 or CO2+VOC probe

Controls

AIR3000TE
The AIR3000 TE controller offers advanced functions and algorithms. It is made up by two control boards, dedicated to the air side and the refrigerant side respectively. The keypad features functional controls and a complete LCD display that allows for unit monitoring and intervention by means of a multilevel menu with a selectable user language. Temperature control is based on PID logic according to the supply temperature set point. It is possible to have set point compensation according to outdoor temperature, both in winter and summer. The operating mode of the unit, cooling/heating/free cooling, is managed automatically. Constant air volume ventilation control is standard: as pressure drop varies, the fans change speed to maintain flow-rate at the design value for the system, according to how dirty the filters are. As an option the air flow can be managed according to a CO2 or CO2 + VOC probe. The controller can also integrate and automatically manage different optional devices: pre-treatment coil, electric heater, gas-fired heating module, humidifier. Unloading modulation function is available for part-load refrigerant circuit operation in critical conditions. Supervision is available with different options, using proprietary
devices or by integration with third party systems using ModBus, BACnet, BACnet-over-IP and Echelon LonWorks protocols. Compatible with remote keypad (management of up to 8 units). The timer can be used to create an operating profile with up to 4 typical days and 10 different time bands.



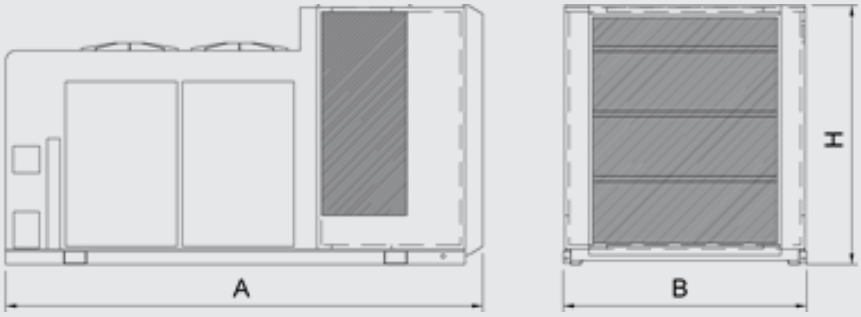
A
B
H

ROOFTOP UNITS

WSM A082 - A152

Reversible air cooled fully configurable high efficiency Rooftop units
24,4-54,9 kW



Autonomous reversible air-to-air Rooftop unit, for the thermo-hygrometric treatment, filtration and air renovation, depending on the selected configuration. Mini WSM units are specifically designed for installation in small to medium sized spaces, such as shops, bars and service areas. Hermetic rotary scroll compressors with R410A refrigerant; single refrigerant circuit; aluminum structure and coated galvanized steel base; air treatment section with sandwich panel and EC plug fans. According to the selected version, the unit allows for the management of free cooling, with supply and return fans with motorized dampers for return, expulsion and fresh air. The unit is also available with the heat recovery Refrigerant Booster to recover the energy from the exhaust air, increasing the units capacity and the global efficiency.

Configurations

AR	Air recirculation function
MF	Mixing and Free cooling function
CE	Function with fans for extraction and expulsion and Free cooling
HR-B	Heat Recovery Refrigerant Booster function: air extractor fan(s), free cooling function and heat recovery from exhaust air flow thanks to Refrigerant Booster coil

Features

FLEXIBILITY

Climaveneta's units offer the opportunity to choose different supply and return airflows directions.

REDUCED FOOTPRINT

One single packaged unit that encloses everything is required for the ambient air conditioning. Particular attention has been given to the structural design of the unit, providing a smaller footprint combined with flexibility, sturdiness and complete operation.

VERSATILITY

Different possibilities for the air treatment chambers; from total recirculation only to mixing with fresh air and extraction from the ambient with heat recovery. Each different configuration can be further customized thanks to a wide range of accessories.

REFRIGERANT BOOSTER

Cutting-edge Refrigerant booster heat recovery system that allows for the complete and precise recovery of the energy from the exhaust air, without any waste due to the mixing with external air. The performance of the cooling circuit is maximized, increasing by 15% the cooling capacity and the compressor working at the same condition.

INSTALLATION AND MAINTENANCE

Simplified operations, reduced costs and maintenance directly on site thanks to: the strong and perfectly insulated structure, easy access to internal sections, plug & play approach and automatic setting of the air flow (optional).

Accessory

- Ambient humidity control: hot gas post heating coil and humidifer.
- Ambient air quality control: CO2 sensor or 4-20 mA remote signal.
- Integration or substitution heating resources: hot water heating coil, electrical heaters, gas heating module
- High efficiency filters: electronic or rigid pocket F7
- Enthalpy free-cooling
- Remote control keyboard (distance to 200m and to 500m)
- Set-up for remote connectivity with ModBus/Echelon protocol cards

Controls

AIR3000TE

The AIR3000 TE controller offers advanced functions and algorithms. It is made up by two control boards, dedicated to the air side and the refrigerant side respectively. The keypad features functional controls and a complete LCD display that allows for the monitoring and intervention on the unit by means of a multi-level menu with selectable user´s language. The step proportional capacity adjustment is based on the return temperature; proportional-integral management can also be set. Its functions include the adjustment of the ambient humidity, the thermal or enthalpic (optional) free-cooling and supply temperature limitation. Defrosting is based on a self-adaptive propriety logic with monitoring of several operating and environmental parameters. The management of the ventilation can be realized with constant air flow regulation (optional): as pressure drop varies, the fans change speed so as to maintain the flow-rate at the designed value for the system, regardless of filter clogging. The controller allows to integrate and automatically manage different optional thermal resources (hot water coil, electrical heater and gas thermal module), hot gas post-heating (optional) and the fresh air percentage (optional with CO2 sensor or remote signal 4-20 mA). The presence of the programmable timer allows the user to create an operating profile containing up to 4 typical days and 10 time bands.
The diagnostics comprises a complete alarm management system, including 'black box' (via PC) functions and an alarm log list (via display or also a PC) for optimized analysis of the unit performance. Supervision can be easily developed via proprietary devices or via third party systems by means of the most common protocols as ModBus, Bacnet, Bacnet-over-IP, Echelon LonWorks protocols. Compatibility with the remote keyboard managing up to 8 units.



WSM			A082	A092	A102	A122	A132	A152
Power supply		V/ph/Hz	400/3/50	400/3/50	400/3/50	400/3/50	400/3/50	400/3/50
COOLING								
Total cooling capacity	(1)	kW	24,4	30,6	33,7	37,9	42,6	47,5
Total sensible capacity	(1)	kW	19,4	23,6	25,6	29,2	33,6	38,4
Compressors power input	(1)	kW	5,39	6,95	8,21	10,2	12,1	13,5
EER (total)	(1)	kW/kW	3,40	3,23	3,15	2,98	2,88	2,88
HEATING								
Total heating capacity	(2)	kW	25,4	31,9	32,4	38,2	42,8	46,2
Compressors power input	(2)	kW	5,31	7,03	8,43	9,31	10,3	11,0
COP (total)	(2)	kW/kW	3,59	3,34	2,97	3,24	3,27	3,30
SEASONAL EFFICIENCY IN COOLING (Reg. EU 2016/2281)								
Ambient refrigeration								
Prated,c	(6)	kW	24,6	30,9	34,0	38,2	42,9	47,9
SEER	(6)		3,86	4,08	3,99	3,91	3,86	3,76
Performance ηs	(6)	%	151,40	160,29	156,56	153,34	151,25	147,54
SEASONAL EFFICIENCY IN HEATING (Reg. EU 2016/2281)								
Ambient heating								
PDesign	(7)	kW	21,0	26,8	27,3	32,4	36,0	39,0
SCOP	(7)		3,09	3,18	3,07	3,23	3,31	3,20
Performance ηs	(7)	%	120,47	124,06	120,00	126,36	129,51	125,13
SUPPLY FANS								
Supply air flow rate		m³/h	4500	5500	5700	6000	7250	8500
External static pressure	(3)	Pa	250	250	250	250	250	250
Total power input		kW	0,78	0,83	0,86	0,90	1,16	1,38
REFRIGERANT CIRCUIT								
No. Compressors/No. Circuits		N°	2/1	2/1	2/1	2/1	2/1	2/1
Refrigerant charge		kg						
NOISE LEVEL								
Sound Power	(4)	dB(A)	79	80	82	83	82	85
SIZE								
Length A		mm	2055	2055	2055	2055	2055	2055
Width B		mm	1300	1300	1300	1300	1300	1300
Height H		mm	1640	1640	1640	1640	1640	1640
Operating weight	(5)	kg	540	560	580	630	650	690

Notes:
1 Cooling: Outdoor 35°C 50% R.H. / Indoor 27°C 47% R.H. / Mix 0%.
2 Heating: Outdoor 7°C 87% R.H. / Indoor 20°C 50% R.H. / Mix 0%.
3 ESP for standard configuration (optional accessories not included/calculated).
4 Sound power on the basis of measurements made in compliance with ISO 9614.
5 Unit in AR configuration and standard execution, without optional accessories.
6 Seasonal energy efficiency of the cooling environment [REGULATION (EU) N. 2016/2281]
7 Seasonal energy efficiency of the heating environment in AVERAGE climatic conditions [REGULATION (EU) N. 2016/2281]
The units highlighted in this publication contain HFC R410A [GWP_{100} 2088] fluorinated greenhouse gases.

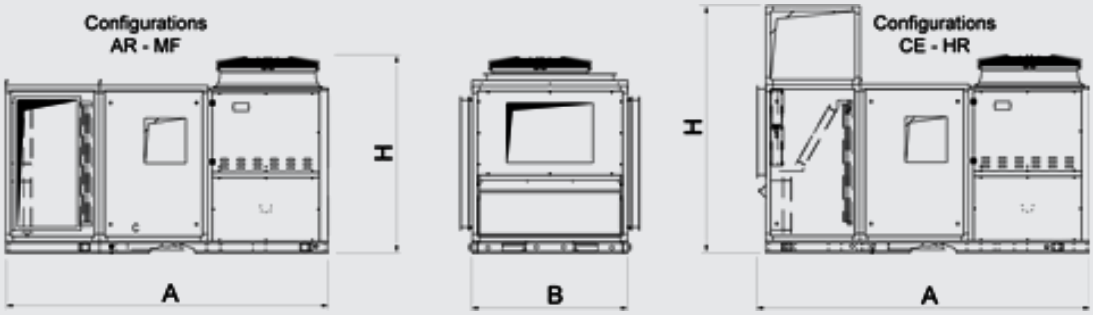

ROOFTOP UNITS

WSM A164 - A1004

Reversible air cooled fully configurable high efficiency Rooftop units
51,7-317 kW

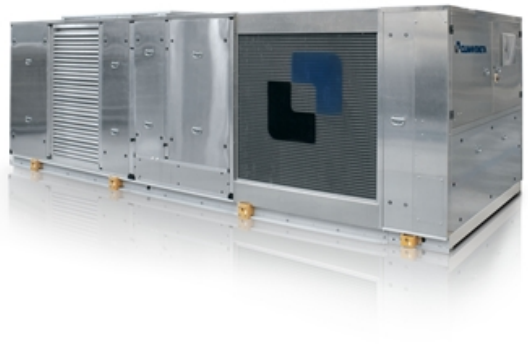

Autonomous reversible air-to-air Rooftop unit, for the thermo-hygrometric treatment, filtration and air renovation, in medium-large surface and volume ambient, such as supermarkets, shopping or exhibition centres.
Hermetic rotary scroll compressors with R410A refrigerant; double refrigerant circuit; aluminum structure and coated galvanized steel base; air treatment section with sandwich panel and EC plug fans. According to the selected version, the unit allows for the management of free cooling, with supply and return fans with motorized dampers for return, expulsion and fresh air. The unit is also available with the thermodynamic Refrigerant Booster heat recovery or air-to air Plate type, to recover the energy from the exhaust air, increasing the units capacity and the global efficiency.

Configurations

AR	Air recirculation function
MF	Mixing and Free cooling function
CE	Function with fans for extraction and expulsion and Free cooling
HR-B	Heat Recovery Refrigerant Booster function: air extractor fan(s), free cooling function and heat recovery from exhaust air flow thanks to Refrigerant Booster coil
HR-P	Heat Recovery Plate function: air extractor fan(s), free cooling function and heat recovery from exhaust air flow thanks to Plate heat Exchanger.

Features

FLEXIBILITY

Climaveneta's units offer the opportunity to choose different supply and return airflows directions.

HIGH RELIABILITY

The wide working range, the double refrigerant circuit and the accurate design of the components ensure optimum performance and comfort, with a continuous and constant operation also during heavy thermoigrometric conditions.

VERSATILITY

Different possibilities for the air treatment chambers; from total recirculation only to mixing with fresh air and extraction from the ambient with heat recovery. Each different configuration can be further customized thanks to a wide range of accessories.

REFRIGERANT BOOSTER

Cutting-edge Refrigerant booster heat recovery system that allows for the complete and precise recovery of the energy from the exhaust air, without any waste due to the mixing with external air. The performance of the cooling circuit is maximized, increasing by 15% the cooling capacity and the compressor working at the same condition.

INSTALLATION AND MAINTENANCE

Simplified operations, reduced costs and maintenance directly on site thanks to: the strong and perfectly insulated structure, easy access to internal sections, plug & play approach and automatic setting of the air flow (optional).

Accessory

- Ambient humidity control: hot gas post heating coil and humidifer.
- Ambient air quality control: CO2 sensor or 4-20 mA remote signal.
- Integration or substitution heating resources: hot water heating coil, electrical heaters, gas heating module
- High efficiency filters: electronic or rigid pocket F7
- Enthalpy free-cooling
- Remote control keyboard (distance to 200m and to 500m)
- Set-up for remote connectivity with ModBus/Echelon protocol cards

Controls

AIR3000TE

The AIR3000 TE controller offers advanced functions and algorithms. It is made up by two control boards, dedicated to the air side and the refrigerant side respectively. The keypad features functional controls and a complete LCD display that allows for the monitoring and intervention on the unit by means of a multi-level menu with selectable user´s language. The step proportional capacity adjustment is based on the return temperature; proportional-integral management can also be set. Its functions include the adjustment of the ambient humidity, the thermal or enthalpic (optional) free-cooling and supply temperature limitation. Defrosting is based on a self-adaptive propriety logic with monitoring of several operating and environmental parameters. The management of the ventilation can be realized with constant air flow regulation (optional): as pressure drop varies, the fans change speed so as to maintain the flow-rate at the designed value for the system, regardless of filter clogging. The controller allows to integrate and automatically manage different optional thermal resources (hot water coil, electrical heater and gas thermal module), hot gas post-heating (optional) and the fresh air percentage (optional with CO2 sensor or remote signal 4-20 mA). The presence of the programmable timer allows the user to create an operating profile containing up to 4 typical days and 10 time bands.
The diagnostics comprises a complete alarm management system, including 'black box' (via PC) functions and an alarm log list (via display or also a PC) for optimized analysis of the unit performance. Supervision can be easily developed via proprietary devices or via third party systems by means of the most common protocols as ModBus, Bacnet, Bacnet-over-IP, Echelon LonWorks protocols. Compatibility with the remote keyboard managing up to 8 units.



WSM			A164	A184	A204	A704	A804	A904	A1004
Power supply		V/ph/Hz	400/3/50	400/3/50	400/3/50	400/3/50	400/3/50	400/3/50	400/3/50
COOLING									
Total cooling capacity	(1)	kW	51,7	56,3	62,2	218	244	280	317
Total sensible capacity	(1)	kW	38,3	43,0	47,4	171	195	213	242
Compressors power input	(1)	kW	13,5	15,6	17,4	60,0	70,5	70,5	80,7
EER (total)	(1)	kW/kW	3,10	2,93	2,93	2,95	2,82	3,09	3,08
HEATING									
Total heating capacity	(2)	kW	55,1	55,8	63,0	219	251	282	318
Compressors power input	(2)	kW	13,2	14,4	17,3	49,6	57,4	68,3	76,9
COP (total)	(2)	kW/kW	3,34	3,10	2,99	3,44	3,41	3,19	3,21
SEASONAL EFFICIENCY IN COOLING (Reg. EU 2016/2281)									
Ambient refrigeration									
Prated,c	(6)	kW	52,1	56,8	62,8	221	248	284	321
SEER	(6)		3,65	3,60	3,51	3,77	3,63	3,60	3,46
Performance ηs	(6)	%	142,91	140,88	137,46	147,72	142,09	141,00	135,46
SEASONAL EFFICIENCY IN HEATING (Reg. EU 2016/2281)									
Ambient heating									
PDesign	(7)	kW	46,3	46,9	53,1	183	209	236	268
SCOP	(7)		3,06	3,05	3,04	3,10	3,07	3,02	3,03
Performance ηs	(7)	%	119,49	118,84	118,74	121,13	119,96	117,87	118,10
SUPPLY FANS									
Supply air flow rate		m³/h	7700	9400	10500	36500	42200	45000	50000
External static pressure	(3)	Pa	250	250	250	250	250	250	250
Total power input		kW	1,16	1,47	1,73	6,87	8,90	9,35	11,5
REFRIGERANT CIRCUIT									
No. Compressors/No. Circuits		N°	4/2	4/2	4/1	4/2	4/2	4/2	4/2
Refrigerant charge		kg							
NOISE LEVEL									
Sound Power	(4)	dB(A)	82	84	85	92	94	97	97
SIZE									
Length A		mm	3065	3065	3065	5565	5565	7430	7430
Width B		mm	1700	1700	1700	2250	2250	2250	2250
Height H		mm	1660	1660	1660	2380	2380	2380	2380
Operating weight	(5)	kg	770	900	960	2674	2751	3800	3800

Notes:
1 Cooling: Outdoor 35°C 50% R.H. / Indoor 27°C 47% R.H. / Mix 0%.
2 Heating: Outdoor 7°C 87% R.H. / Indoor 20°C 50% R.H. / Mix 0%.
3 ESP for standard configuration (optional accessories not included/calculated).
4 Sound power on the basis of measurements made in compliance with ISO 9614.
5 Unit in AR configuration and standard execution, without optional accessories.
6 Seasonal energy efficiency of the cooling environment [REGULATION (EU) N. 2016/2281]
7 Seasonal energy efficiency of the heating environment in AVERAGE climatic conditions [REGULATION (EU) N. 2016/2281]
The units highlighted in this publication contain HFC R410A [GWP_{100} 2088] fluorinated greenhouse gases.

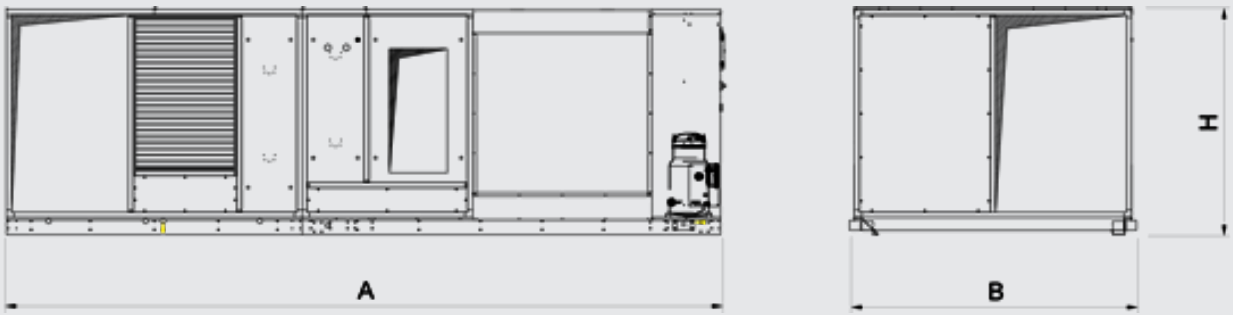

ROOFTOP UNITS

WRX 0162 - 0804

Reversible air cooled fully configurable high efficiency Rooftop units
50,8-240 kW



Autonomous reversible air-to-air Rooftop unit, for the thermo-hygrometric treatment, filtration and air renovation, in medium-large surface and volume ambient, such as supermarkets, shopping or exhibition centres.
Hermetic rotary scroll compressors with R410A refrigerant; double refrigerant circuit fitted with Electronic Expansion Valves; EC plug fans are standard on these units.
The structure is specific for outdoor installation, with base and supporting structure made of hot galvanized sheet metal profiles of adequate thickness. The vertical structure and outer panelling are also painted with polyester powders RAL 7035. The air treatment section is insulated internally with a double layer high tech material. The insulation is fixed with specific adhesives to the sheet metal together with mechanical fastenings that guarantee maximum hold over time.
According to the selected version, the unit allows for the management of free cooling, with supply and return fans with motorized dampers for return, expulsion and fresh air.
The unit can be supplied with 4 types of heat recovery: thermodynamic recovery, Refrigerant Booster (an additional refrigerant coil placed on exhaust air flow), air-to air Plate or Rotary, to recover the energy from the exhaust air, increasing unit capacity and the global efficiency.

Configurations

AR	Air recirculation function
MF	Mixing and Free cooling function
AX	Mixing and Free cooling function with Exhaust air Axial fan
HR-F	Heat Recovery Free: air extractor fan(s), free cooling function and thermodynamic heat recovery from exhaust air flow
HR-B	Heat Recovery Refrigerant Booster function: air extractor fan(s), free cooling function and heat recovery from exhaust air flow thanks to Refrigerant Booster coil
HR-P	Heat Recovery Plate function: air extractor fan(s), free cooling function and heat recovery from exhaust air flow thanks to Plate heat Exchanger.
HR-E	Heat Recovery Enthalpy function: air extractor fan(s), free cooling function and heat recovery from exhaust air flow thanks to Rotary Enthalpic Wheel.

Features

HIGH RELIABILITY

The wide working range, the double refrigerant circuit and the accurate design of the components ensure optimum performance and comfort, with a continuous and constant operation also during heavy thermoigrometric conditions.

FLEXIBILITY

Climaveneta's units offer the opportunity to choose different supply and return airflows directions.

VERSATILITY

Different possibilities for the air treatment chambers; from total recirculation only to mixing with fresh air and extraction from the ambient with heat recovery. Each different configuration can be further customized thanks to a wide range of accessories.

HEAT RECOVERY FROM EXHAUST AIR FLOW

Units can be equipped with 4 different heat recovery systems, to address a wide range of needs.

PLUG-FAN VENTILATION

The supply and return plug fans combine the high efficiency of the ventilation section with an easy and fast installation of the unit, both electrical and aeraulic.

Accessory

- Enthalpy free-cooling
- Set-up for remote connectivity with ModBus/Echelon protocol cards
- Air flow regulation with CO2 or CO2+VOC probe
- Integration or substitution heating resources: hot water heating coil, electrical heaters, gas heating module

Controls

AIR3000TE

The AIR3000 TE controller offers advanced functions and algorithms. It is made up by two control boards, dedicated to the air side and the refrigerant side respectively. The keypad features functional controls and a complete LCD display that allows for unit monitoring and intervention by means of a multilevel menu with a selectable user language. Temperature control is based on PID logic according to the supply temperature set point. It is possible to have set point compensation according to outdoor temperature, both in winter and summer. The operating mode of the unit, cooling/heating/free cooling, is managed automatically. Constant air volume ventilation control is standard: as pressure drop varies, the fans change speed to maintain flow-rate at the design value for the system, according to how dirty the filters are. As an option the air flow can be managed according to a CO2 or CO2 + VOC probe. The controller can also integrate and automatically manage different optional devices: pre-treatment coil, electric heater, gas-fired heating module, humidifier. Unloading modulation function is available for part-load refrigerant circuit operation in critical conditions. Supervision is available with different options, using proprietary
devices or by integration with third party systems using ModBus, BACnet, BACnet-over-IP and Echelon LonWorks protocols. Compatible with remote keypad (management of up to 8 units). The timer can be used to create an operating profile with up to 4 typical days and 10 different time bands.



WRX			0162	0182	0202	0262	0302	0352	0402
Power supply		V/ph/Hz	400/3/50	400/3/50	400/3/50	400/3/50	400/3/50	400/3/50	400/3/50
COOLING									
Total cooling capacity	(1)	kW	50,8	58,3	69,0	82,6	97,2	110	121
Total sensible capacity	(1)	kW	43,0	48,4	56,7	67,8	79,5	89,2	97,8
Compressors power input	(1)	kW	12,3	14,0	16,2	21,5	25,4	29,5	32,9
EER (total)	(1)	kW/kW	3,14	3,17	3,17	3,03	3,09	3,03	3,02
HEATING									
Total heating capacity	(2)	kW	48,9	55,9	66,4	81,0	95,2	109	123
Compressors power input	(2)	kW	9,69	11,1	12,7	16,4	20,3	23,2	26,6
COP (total)	(2)	kW/kW	3,60	3,61	3,63	3,63	3,61	3,65	3,64
SEASONAL EFFICIENCY IN COOLING (Reg. EU 2016/2281)									
Ambient refrigeration									
Prated,c	(6)	kW	51,4	58,9	69,7	83,6	98,3	111	123
SEER	(6)		3,37	3,37	3,45	3,35	3,46	3,43	3,36
Performance ηs	(6)	%	131,63	131,94	134,91	130,96	135,49	134,22	131,33
SEASONAL EFFICIENCY IN HEATING (Reg. EU 2016/2281)									
Ambient heating									
PDesign	(7)	kW	40,3	46,2	54,8	67,0	78,7	90,2	101
SCOP	(7)		2,98	2,96	2,98	3,01	2,99	3,05	2,99
Performance ηs	(7)	%	116,10	115,44	116,38	117,52	116,45	118,98	116,42
SUPPLY FANS									
Supply air flow rate		m³/h	10500	12000	14000	16000	18500	21000	22500
External static pressure	(3)	Pa	250	250	250	250	250	250	250
Total power input		kW	1,93	2,49	2,63	2,85	3,11	3,66	4,08
REFRIGERANT CIRCUIT									
No. Compressors/No. Circuits		N°	2/2	2/2	2/2	2/2	2/2	2/2	2/2
Refrigerant charge		kg							
NOISE LEVEL									
Sound Power	(4)	dB(A)	77	79	82	83	84	86	87
SIZE									
Length A		mm	3400	3400	3400	3850	3850	3850	3850
Width B		mm	2200	2200	2200	2200	2200	2200	2200
Height H		mm	2130	2130	2130	2130	2130	2130	2130
Operating weight	(5)	kg	1264	1330	1350	1546	1618	1749	1814

WRX			0444	0484	0524	0604	0704	0804
Power supply		V/ph/Hz	400/3/50	400/3/50	400/3/50	400/3/50	400/3/50	400/3/50
COOLING								
Total cooling capacity	(1)	kW	142	154	170	189	219	240
Total sensible capacity	(1)	kW	116	127	139	152	176	194
Compressors power input	(1)	kW	35,6	36,2	39,9	50,7	58,9	67,2
EER (total)	(1)	kW/kW	3,16	3,23	3,24	2,96	3,01	2,91
HEATING								
Total heating capacity	(2)	kW	138	148	168	192	217	239
Compressors power input	(2)	kW	27,6	29,2	33,5	41,7	46,4	52,6
COP (total)	(2)	kW/kW	3,73	3,64	3,64	3,49	3,60	3,53
SEASONAL EFFICIENCY IN COOLING (Reg. EU 2016/2281)								
Ambient refrigeration								
Prated,c	(6)	kW	144	156	173	192	222	243
SEER	(6)		3,54	3,85	3,80	3,77	3,55	3,69
Performance ηs	(6)	%	138,46	150,87	148,86	147,92	139,06	144,42
SEASONAL EFFICIENCY IN HEATING (Reg. EU 2016/2281)								
Ambient heating								
PDesign	(7)	kW	106	114	129	148	192	183
SCOP	(7)		3,20	3,20	3,26	3,14	3,30	3,21
Performance ηs	(7)	%	124,98	124,90	127,59	122,54	128,95	125,30
SUPPLY FANS								
Supply air flow rate		m³/h	27000	30000	32500	35000	41000	45000
External static pressure	(3)	Pa	250	250	250	250	250	250
Total power input		kW	4,80	5,24	5,89	6,60	7,46	8,87
REFRIGERANT CIRCUIT								
No. Compressors/No. Circuits		N°	4/2	4/2	4/2	4/2	4/2	4/2
Refrigerant charge		kg						
NOISE LEVEL								
Sound Power	(4)	dB(A)	85	86	86	86	89	90
SIZE								
Length A		mm	5325	5325	5325	5325	6225	6225
Width B		mm	2200	2200	2200	2200	2200	2200
Height H		mm	2130	2130	2130	2130	2130	2130
Operating weight	(5)	kg	2141	2335	2427	2427	3016	3168

Notes:
1 Cooling: Outdoor 35°C 50% R.H. / Indoor 27°C 47% R.H. / Mix 0%.
2 Heating: Outdoor 7°C 87% R.H. / Indoor 20°C 50% R.H. / Mix 0%.
3 ESP for standard configuration (optional accessories not included/calculated).
4 Sound power on the basis of measurements made in compliance with ISO 9614.
5 Unit in AR configuration and standard execution, without optional accessories.
6 Seasonal energy efficiency of the cooling environment [REGULATION (EU) N. 2016/2281]
7 Seasonal energy efficiency of the heating environment in AVERAGE climatic conditions [REGULATION (EU) N. 2016/2281]
The units highlighted in this publication contain HFC R410A [GWP_{100} 2088] fluorinated greenhouse gases.

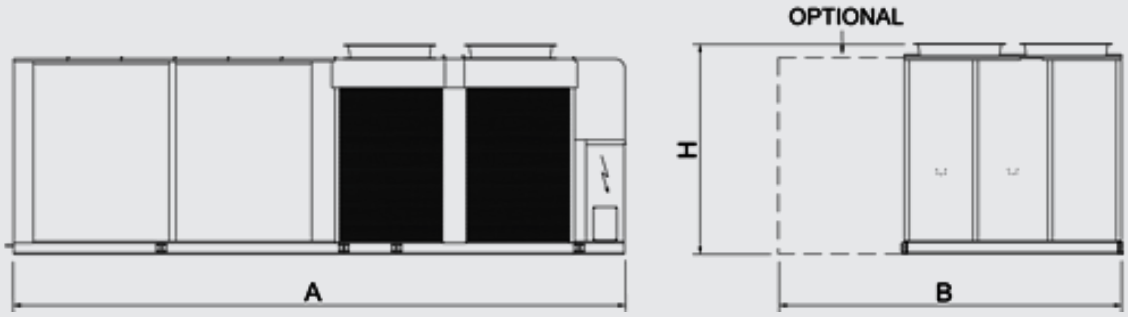
OPTIONAL
H
A
B

ROOFTOP UNITS

WSM2 0264 - 0604

Reversible air cooled fully configurable high efficiency Rooftop units
81,1-182 kW



Autonomous reversible air-to-air Rooftop unit, for the thermo-hygrometric treatment, filtration and air renovation, in medium-large surface and volume ambient, such as supermarkets, shopping or exhibition centres.
Hermetic rotary scroll compressors in tandem with R410A refrigerant; double refrigerant circuit; aluminium structure and coated galvanized steel base; air treatment section with sandwich panel with external surface made with coated galvanized steel RAL 7035 and EC fans.
The condensing side is made with hot galvanized sheet metal painted with polyester powders RAL 7035
According to the selected version, the unit allows for the management of free cooling, with supply and return fans with motorized dampers for return, expulsion and fresh air. The unit is also available with the thermodynamic Refrigerant Booster heat recovery, air-to air Plate type or rotary heat exchanger, to recover the energy from the exhaust air, increasing the units capacity and the global efficiency.

Configurations

AR	Air recirculation function
MF	Mixing and Free cooling function
AX	Mixing and Free cooling function with Exhaust air Axial fan
CE	Function with fans for extraction and expulsion and Free cooling
HR-B	Heat Recovery Refrigerant Booster function: air extractor fan(s), free cooling function and heat recovery from exhaust air flow thanks to Refrigerant Booster coil
HR-P	Heat Recovery Plate function: air extractor fan(s), free cooling function and heat recovery from exhaust air flow thanks to Plate heat Exchanger.
HR-E	Heat Recovery Enthalpy function: air extractor fan(s), free cooling function and heat recovery from exhaust air flow thanks to Rotary Enthalpic Wheel.

Features

ENERGY EFFICENCY

The unit fulfill EU regulation 2016/2281; in particular, the unit is in line with energy efficiency limits starting from January 1st, 2021 (ErP 2021).

HIGH RELIABILITY

The wide working range, the double refrigerant circuit and the accurate design of the components ensure optimum performance and comfort, with a continuous and constant operation also during heavy thermoigrometric conditions.

FLEXIBILITY

Climaveneta's units offer the opportunity to choose different supply and return airflows directions.

ROTARY-TYPE ENTHALPY RECOVERY

The exclusive enthalpic rotary heat recovery allows to recover from the exhaust air both sensible and latent heat, both in winter and summer operation.
The recovery of the latent heat improves the dehumidification capability of the unit in summer and the humidification in winter, with a very high efficiency ratio.

STATIC PLATE HEAT RECOVERY

The static plate heat recovery provides a constant and effective recovery of the sensible energy from the exhaust air. In winter mode the efficency can reach values higher than 50%, that, together with the zero energy consumption of the component, grant an effective energy and economic saving.

REFRIGERANT BOOSTER

Cutting-edge Refrigerant booster heat recovery system that allows for the complete and precise recovery of the energy from the exhaust air, without any waste due to the mixing with external air. The performance of the cooling circuit is maximized, increasing by 15% the cooling capacity and the compressor working at the same condition.

PLUG-FAN VENTILATION

The supply and return plug fans combine the high efficiency of the ventilation section with an easy and fast installation of the unit, both electrical and aeraulic.

Accessory

- Ambient humidity control: hot gas post heating coil and humidifer.
- High efficiency filters: electronic or rigid pocket F7
- Enthalpy free-cooling
- Air flow regulation with CO2 or CO2+VOC probe

Controls

AIR3000TE

The AIR3000 TE controller offers advanced functions and algorithms. It is made up by two control boards, dedicated to the air side and the refrigerant side respectively. The keypad features functional controls and a complete LCD display that allows for unit monitoring and intervention by means of a multilevel menu with a selectable user language. Temperature control is based on PID logic according to the supply temperature set point. It is possible to have set point compensation according to outdoor temperature, both in winter and summer. The operating mode of the unit, cooling/heating/free cooling, is managed automatically. Constant air volume ventilation control is standard: as pressure drop varies, the fans change speed to maintain flow-rate at the design value for the system, according to how dirty the filters are. As an option the air flow can be managed according to a CO2 or CO2 + VOC probe. The controller can also integrate and automatically manage different optional devices: pre-treatment coil, electric heater, gas-fired heating module, humidifier. Unloading modulation function is available for part-load refrigerant circuit operation in critical conditions. Supervision is available with different options, using proprietary
devices or by integration with third party systems using ModBus, BACnet, BACnet-over-IP and Echelon LonWorks protocols. Compatible with remote keypad (management of up to 8 units). The timer can be used to create an operating profile with up to 4 typical days and 10 different time bands.



WSM2			0444	0484	0524	0604
Power supply		V/ph/Hz	400/3/50	400/3/50	400/3/50	400/3/50
COOLING						
Total cooling capacity	(1)	kW	133	144	159	182
Total sensible capacity	(1)	kW	102	110	121	141
Compressors power input	(1)	kW	34,8	35,5	39,4	49,6
EER (total)	(1)	kW/kW	3,08	3,08	3,06	2,88
HEATING						
Total heating capacity	(2)	kW	133	143	163	189
Compressors power input	(2)	kW	33,7	35,7	39,6	45,9
COP (total)	(2)	kW/kW	3,15	3,05	3,13	3,17
SEASONAL EFFICIENCY IN COOLING (Reg. EU 2016/2281)						
Ambient refrigeration						
Prated,c	(6)	kW	134	146	161	185
SEER	(6)		3,88	3,74	3,62	3,61
Performance ηs	(6)	%	152,35	146,46	141,86	141,31
SEASONAL EFFICIENCY IN HEATING (Reg. EU 2016/2281)						
Ambient heating						
PDesign	(7)	kW	104	112	128	147
SCOP	(7)		3,31	3,21	3,21	3,21
Performance ηs	(7)	%	129,34	125,54	125,40	125,24
SUPPLY FANS						
Supply air flow rate		m³/h	22500	25000	28000	30500
External static pressure	(3)	Pa	250	250	250	250
Total power input		kW	3,67	4,74	5,85	7,03
REFRIGERANT CIRCUIT						
No. Compressors/No. Circuits		N°	4/2	4/2	4/2	4/2
Refrigerant charge		kg				
NOISE LEVEL						
Sound Power	(4)	dB(A)	85	86	87	87
SIZE						
Length A		mm	4465	4465	4465	4465
Width B		mm	2250	2250	2250	2250
Height H		mm	2410	2410	2410	2410
Operating weight	(5)	kg	2205	2275	2445	2471

Notes:
1 Cooling: Outdoor 35°C 50% R.H. / Indoor 27°C 47% R.H. / Mix 0%.
2 Heating: Outdoor 7°C 87% R.H. / Indoor 20°C 50% R.H. / Mix 0%.
3 ESP for standard configuration (optional accessories not included/calculated).
4 Sound power on the basis of measurements made in compliance with ISO 9614.
5 Unit in AR configuration and standard execution, without optional accessories.
6 Seasonal energy efficiency of the cooling environment [REGULATION (EU) N. 2016/2281]
7 Seasonal energy efficiency of the heating environment in AVERAGE climatic conditions [REGULATION (EU) N. 2016/2281]
The units highlighted in this publication contain HFC R410A [GWP_{100} 2088] fluorinated greenhouse gases.

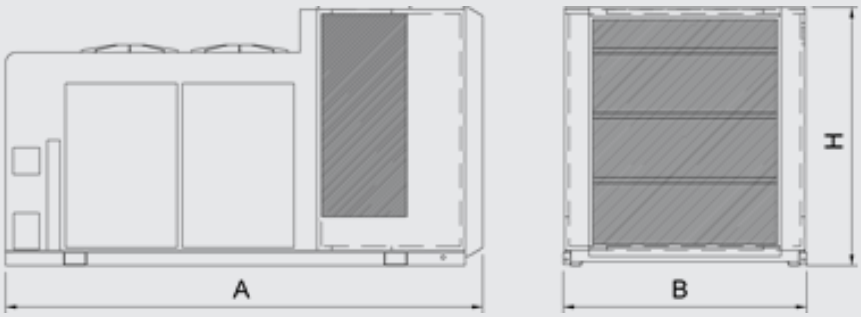

AIR HANDLING UNITS

AIR HANDLING UNITS

AIR HANDLING UNITS

WIZARD

Air Handling Units



WIZARD Series .
The Wizard series of Air-Handling Units incorporate the entire design experience of Climaveneta in order to fully satisfy all market requirements in the various sectors of application. Tailored though massproduced industrial products, these high quality and reliable units guarantee total safety.
The WIZARD air handling units are suitable for both traditional application fi elds as hotels, museums, theatres, airports, banks, shops and specifi c sectors as hospitals, food industry, electronics or pharmaceutical industries and all the industrial applications with temperature or controlled-contamination processes.

Version

. Different accessories and configurations are available as the brushless motors, the plate or wheel recuperators and the control systems for plug&play untis.

Features

STRUCTURE
The range is made of 24 sizes for air fl ows up to 115.000 m³/h. The panels are 25, 42, 45 or 62 mm thick, according to the different kinds of application requiring different thermal and acoustic isolation.

The sandwich panels are available in galvanized steel sheet, pre-painted or plastic-coated galvanized steel sheet, aluminum or AISI 304 stainless steel sheet with isolation by injected polyurethane or mineral rock wool.

The frame is made of aluminum profi les available also in thermal cut version, for an higher thermal isolation, and in internally rounded version for hospital application.

Heat exchangers, fi lters, humidifi ers, energy recovery systems, fans and any other component required in the units are selected to grant the best performances according to the customer requests.

"EC" FANS
The option for fans with brushless motors allows for units with reduced dimensions. Controlled by means of a 0-10V signal even without a frequency inverter, these fans are very versatile and easy to be used.

PLUG&PLAY UNITS
As an option, a complete control system is provided to handle all the units functions.

The electrical board is built-in and totally wired as all the control components such as 3-way valves, probes, damper motors and humidifiers.

REDUCED TIMING AND COSTS
The plug&play units are ready to use without any further operation on site.

Compared to the traditional AHUs, the easier and quicker installation of the plug&play units results in a strong costs reduction solution.

All the signal and controls are verified and check with a final factory test before delivery. In case of units divided in sections, special connectors are provided to rebuild the signals lines on sites. These connectors are error-proof and don't required qualified technicians.

LOW NOISE EMISSIONS
The WIZARD units are designed to minimize the acoustic impact in each operating condition.
In case of special applications, such as theatres, conference rooms or cinemas, it is possible to provide sound absorbing panels and customized sound attenuators.

Controls

AHU 3000
The AHU3000 controller is featured as option for the air handling units. It offers functions and regulations able to satisfy the numerous combinations possible with these units. Furthermore this option enhances and simplifies the unit's commissioning, allowing also the interfacing towards other resources and devices. The keypad features aesthetic design, easy-to-use interface, smart LCD display. The regulation integrates numerous characteristics, depending on the unit's configuration and selected options: command of the dampers and of the free-cooling; regulation of the resources for heating, cooling as well as humidity and air quality; regulation of supply and exhaust fans with control in constant flow or constant pressure. The diagnostics includes a complete alarm management, with the the "black-box" and alarm logging functions for enhanced analysis of the unit operation. Supervision can be easily developed via proprietary devices or the most common protocols as ModBus, Bacnet. Compatibility with the remote keyboard (connected up to 200 m.). Availability of an internal real time clock for operation scheduling (4-day profiles with 10 hour belts).



WIZARD			300	380	440	570	710	920	1070	1220
Air Flow (Speed 1,5 m/s)	(1)	m³/h	650	810	970	1130	1400	1700	2200	2650
Air Flow (Speed 2 m/s)	(1)	m³/h	860	1070	1300	1500	1870	2300	2950	3550
Air Flow (Speed 2,5 m/s)	(1)	m³/h	1080	1340	1620	1880	2330	3650	3650	4450
Air Flow (Speed 3 m/s)	(1)	m³/h	1300	1600	1950	2250	2800	4400	4400	5300

WIZARD			1530	1720	2080	2300	2920	3600	4300	6060
Air Flow (Speed 1,5 m/s)	(1)	m³/h	3200	4200	4900	5600	6300	7800	9300	12500
Air Flow (Speed 2 m/s)	(1)	m³/h	4350	5600	6500	7450	8400	10300	12400	16700
Air Flow (Speed 2,5 m/s)	(1)	m³/h	5450	7000	8200	9300	10500	12900	15600	20900
Air Flow (Speed 3 m/s)	(1)	m³/h	6550	8400	9800	11200	12600	15500	18600	25100

WIZARD			7500	8480	11400	13900	16580	19860	22920	26400
Air Flow (Speed 1,5 m/s)	(1)	m³/h	15600	18100	21400	26400	32200	38000	46500	57000
Air Flow (Speed 2 m/s)	(1)	m³/h	20700	24200	28500	35200	42800	51000	62000	75000
Air Flow (Speed 2,5 m/s)	(1)	m³/h	25900	30300	35600	44900	53500	64000	77500	95000
Air Flow (Speed 3 m/s)	(1)	m³/h	31100	36300	42800	52700	64300	76500	93500	115400

Notes:
1 Air fl ows of the 24 sizes at different face velocities on the heat exchange coils.

<<< BACK INDEX

a-LIFE2 0102 - 1004
i-LIFE2 0202 - 1004
a-LIFE2 HP 0302 - 1204
i-LIFE2 HP 0202 - 1204
i-LIFE2 SLIM 080 - 370
MHD2 30 - 60
a-CHD 0606 - 2209
a-CND 0600 - 1200
i-CHD 0706 - 2209
i-CND 0600 - 1200
a-HWD2 102 - 902
i-HWD2 102 - 902
HRD2 050 - 410
WTA 0021 - 0126

HYDRONIC TERMINALS

HYDRONIC TERMINALS

HYDRONIC TERMINALS

a-LIFE2 0102 - 1004

Fan-coil for professional applications, with cabinet or built-in version 1,50-7,50 kW



The new a-LIFE3 fancoil has been specifically developed to be adapted to every ambient thanks to its modern and minimal design which is result of the full experience and Climaveneta's know-how on this range of products.
Centrifugal fan with 6 speed via auto-transformer. Thanks to the different versions, with cabinet or buit in, low air intake or front air intake, vertical or horizontal installation, it results very easy to find the perfect solution any time.

Version

DLMV	version with cabinet, low air intake, vertical installation
DLMO	version with cabinet, low air intake, horizontal installation
DFMV	version with cabinet, front air intake, vertical installation
DFMO	version with cabinet, front air intake, horizontal installation
DLIV	built-in version, low air intake, vertical installation.
DLIO	built-in version, low air intake, horizontal installation
DFIV	built-in version, front air intake, vertical installation
DFIO	built-in version, front air intake, horizontal installation

Features

Centrifugal Fan with double air inlet, to ensure the best performances with the best acoustic emissions.
Coils with aluminium fins and copper pipes.
Configurations for 2 and 4 pipe Systems.
Left-hand water connections, easy convertible into right-hand, by simply turning the coil
6-speed autotransformer;
Air filter on all models.
Automatically closing flap to cover and protect electric controls from dripping water (in conformity with directive 60335-2-40).
Auxiliary drain pan with thermal insulation for all Horizontal versions, made of galvanized steel.
Plastic drain pan for all Vertical versions.

Accessory

- Hot water coil kit
- Kit Bus Adapter for BMS
- Kit RS485 - interface for Building Management System
- Kit Gateway interface for MyHome Bticino System
- Interface SPB Kit
- Kit control board to manage 0-10V or 3 points modulating valve unit
- Main and additional coil valve unit ON/OFF, PWM, 0-10 V, 3 points 2-way or 3-way
- Kit LIFE3 BOX
- Plenum kit with round, straight or 90° air ducts.
- Air intake grille kit with version cover
- Horizontal and vertical fan coil auxiliary tray
- Electric heaters

Controls

PS plug-in/PSW wall mounted
Fan speed slider, mode slider (OFF/summer/winter). ON/OFF valve unit control (summer/winter for 2 pipes installation), ON/OFF second valve unit control (winter for 4 pipes installation). Remote water temperature probe.
MT plug-in/MTW wall mounted
Fan speed slider, mode slider (OFF/summer/winter). Thermostat with set point regulation. ON/OFF valve unit control (summer/winter for 2 pipes installation), ON/OFF second valve unit control (winter for 4 pipes installation). Room temperature probe. Remote water temperature probe.
AT plug-in/ATW wall mounted
Mode button (OFF/summer/winter/AUTO), fan speed button (Max/Med/Min/AUTO). Thermostat with set point regulation. ON/OFF valve unit control (summer/winter for 2 and 4 pipes installation). Control of traditional or PWM modulating valve units. Room temperature probe and water temperature probe. Digital input configurable as: window contact, economy, heating or cooling remote changeover, periodic ventilation. Configuration dip switch. TTL serial port with Modbus protocol for installation in BMS.
EK plug-in control /EKW wall mounted control
User interface for selection of functioning mode (OFF/summer/winter/AUTO), fan speed (Max/Med/Min/AUTO), temperature set. Control of main and additional coil valve unit (summer/winter - 2 and 4 pipes installation) . Management of traditional ON/OFF valve unit or modulating valve unit 0-10V or 3 points . Air and water temperature probe. Multifunction digital input configurable by user. Configuration dip switch.
Modbus protocol for installation in BMS (e.g. Idrorelax system by Climaveneta). Installation and management of Master-Slave system up to 8 LIFE fan coil units.
Easy control installation thanks to 2 wires connection.
iK control with LCD screen
Interface with LCD screen with user-friendly icons. Control kit for universal installation: wall-mounted as well as plug-in. Selection of functioning mode (OFF/summer/winter/AUTO), fan speed (Max/Med/Min/AUTO), temperature set. Control iK could function manually or with weekly timer regulation configurable by the customer.
Control of main coil valve unit (summer/winter - 2 pipes) and additional coil (winter - 4 pipes). Management of traditional ON/OFF valve unit or modulating valve unit 0-10V or 3 points (supply 230 VAC or 24V) .
Parameters configurable directly by user. Modbus protocol for installation in Building Management System (e.g. Idrorelax system by Climaveneta). Installation and management of Master-Slave system up to 8 LIFE2 fan coil units.
Easy control installation thanks to 2 wires connection through HB power board
Remote control
In combination with (i)HB powerboard on board of the units, it's possible to have Set-point regulation, selection of functioning mode (cool, heat, dehumidify, fan), and fan speed (Max, Med, Min, AUTO). User-sfriendly compact remote control with fine aethetics.

a-LIFE2 / DLIV-DFIV			0102	0202	0302	0402	0502
ELECTRICAL DATA							
Power supply		V/ph/Hz	230/1/50	230/1/50	230/1/50	230/1/50	230/1/50
2 PIPES SYSTEM CONFIGURATION							
ENERGY EFFICIENCY							
COOLING (EN14511 VALUE)							
FCEER	(1)(6)	kW/kW	46	65	61	65	59
FCEER Class			E	D	D	D	D
HEATING ONLY (EN14511 VALUE)							
FCCOP	(2)(6)	kW/kW	55	78	71	74	69
FCCOP Class			E	D	D	D	E
PERFORMANCE							
MIN SPEED							
Fan Power Input	(1)	W	20,0	20,0	29,0	32,0	40,0
Air flow rate	(1)	m³/h	180	270	350	380	500
Total capacity in cooling mode	(1)	kW	1,00	1,49	2,07	2,31	2,85
Total Net Cooling Capacity	(1)(6)(7)	kW	0,98	1,47	2,04	2,28	2,81
Sensible capacity in cooling mode	(1)	kW	0,78	1,18	1,59	1,75	2,22
Net sensible cooling capacity	(1)(6)(7)	kW	0,76	1,16	1,56	1,72	2,18
Net latent power in cooling	(1)(6)(7)	kW	0,22	0,31	0,48	0,56	0,63
Max water flow	(1)	l/s	0,05	0,07	0,10	0,11	0,14
Pressure Drop in cooling mode	(1)	kPa	4	7	16	16	7
Total capacity (heating mode)	(2)	kW	1,19	1,77	2,37	2,59	3,23
Total Net Heating Capacity	(2)(6)	kW	1,21	1,79	2,40	2,63	3,27
Water flow in heating mode	(2)	l/s	0,06	0,09	0,11	0,13	0,16
Pressure drop in heating mode	(2)	kPa	5	9	19	21	8
Sound Pressure	(3)	dB(A)	28	37	36	37	37
Sound Power	(4)(7)	dB(A)	37	46	45	46	46
MED SPEED							
Fan Power Input	(1)	W	29,0	32,0	47,0	50,0	67,0
Air flow rate	(1)	m³/h	210	290	410	500	560
Total capacity in cooling mode	(1)	kW	1,16	1,74	2,33	2,85	3,08
Total Net Cooling Capacity	(1)(6)(7)	kW	1,13	1,71	2,28	2,80	3,01
Sensible capacity in cooling mode	(1)	kW	0,90	1,31	1,77	2,22	2,43
Net sensible cooling capacity	(1)(6)(7)	kW	0,87	1,28	1,72	2,17	2,37
Net latent power in cooling	(1)(6)(7)	kW	0,26	0,43	0,56	0,63	0,65
Max water flow	(1)	l/s	0,06	0,08	0,11	0,14	0,15
Pressure Drop in cooling mode	(1)	kPa	5	10	21	24	8
Total capacity (heating mode)	(2)	kW	1,38	1,96	2,61	3,26	3,54
Total Net Heating Capacity	(2)(6)	kW	1,40	1,99	2,66	3,31	3,61
Water flow in heating mode	(2)	l/s	0,07	0,09	0,13	0,16	0,17
Pressure drop in heating mode	(2)	kPa	7	11	23	32	10
Sound Pressure	(3)	dB(A)	31	39	37	42	39
Sound Power	(4)(7)	dB(A)	40	48	46	51	48
MAX SPEED							
Fan Power Input	(1)	W	34,0	34,0	56,0	59,0	80,0
Air flow rate	(1)	m³/h	300	360	520	590	660
Total capacity in cooling mode	(1)	kW	1,50	2,00	2,85	3,40	3,80
Total Net Cooling Capacity	(1)(6)(7)	kW	1,47	1,97	2,80	3,34	3,72
Sensible capacity in cooling mode	(1)	kW	1,23	1,59	2,22	2,61	2,94
Net sensible cooling capacity	(1)(6)(7)	kW	1,20	1,55	2,17	2,55	2,87
Net latent power in cooling	(1)(6)(7)	kW	0,27	0,41	0,63	0,79	0,86
Max water flow	(1)	l/s	0,07	0,10	0,14	0,16	0,18
Pressure Drop in cooling mode	(1)	kPa	9	13	31	34	13
Total capacity (heating mode)	(2)	kW	1,86	2,40	3,27	3,71	4,38
Total Net Heating Capacity	(2)(6)	kW	1,89	2,43	3,33	3,77	4,46
Water flow in heating mode	(2)	l/s	0,09	0,12	0,16	0,18	0,21
Pressure drop in heating mode	(2)	kPa	12	16	35	41	14
Sound Pressure	(3)	dB(A)	39	45	42	47	45
Sound Power	(4)(7)	dB(A)	48	54	51	56	54
SIZE AND WEIGHT							
A	(5)	mm	450	450	650	650	850
B	(5)	mm	215	215	215	215	215
H	(5)	mm	450	450	450	450	450
Operating weight	(5)	kg	11	11	13	14	19

Notes:
1 Room temperature 27 °C d.b./19 °C w.b.; Chilled water (in/out) 7/12 °C.
2 Room temperature 20 °C d.b.; Hot water (in/out) 45/40 °C
3 Sound pressure level in free field on a reflective surface, 1 m from fan front and 1 m from the ground. Non -binding value obtained fron sound power level.
4 Sound power on the basis of measurements made in compliance with ISO 3741 and Eurovent 8/2.
5 Unit in standard configuration/execution, without optional accessories.
6 Values in compliance with EN14511-3:2013.
7 Values in compliance with [REGULATION (EU) N. 2016/2281]

a-LIFE2 / DLIV-DFIV			0602	0702	0802	0902	1002
ELECTRICAL DATA							
Power supply		V/ph/Hz	230/1/50	230/1/50	230/1/50	230/1/50	230/1/50
2 PIPES SYSTEM CONFIGURATION							
ENERGY EFFICIENCY							
COOLING (EN14511 VALUE)							
FCEER	(1)(6)	kW/kW	53	70	74	61	70
FCEER Class			E	D	D	D	D
HEATING ONLY (EN14511 VALUE)							
FCCOP	(2)(6)	kW/kW	62	82	88	71	80
FCCOP Class			E	D	D	D	D
PERFORMANCE							
MIN SPEED							
Fan Power Input	(1)	W	51,0	47,0	50,0	63,0	65,0
Air flow rate	(1)	m³/h	550	640	760	790	920
Total capacity in cooling mode	(1)	kW	3,02	4,06	4,50	4,71	5,40
Total Net Cooling Capacity	(1)(6)(7)	kW	2,97	4,01	4,45	4,65	5,34
Sensible capacity in cooling mode	(1)	kW	2,39	3,00	3,44	3,59	4,14
Net sensible cooling capacity	(1)(6)(7)	kW	2,34	2,96	3,39	3,53	4,08
Net latent power in cooling	(1)(6)(7)	kW	0,63	1,06	1,06	1,12	1,26
Max water flow	(1)	l/s	0,14	0,19	0,22	0,23	0,26
Pressure Drop in cooling mode	(1)	kPa	10	15	22	19	33
Total capacity (heating mode)	(2)	kW	3,52	4,57	5,19	5,31	6,02
Total Net Heating Capacity	(2)(6)	kW	3,57	4,62	5,24	5,37	6,09
Water flow in heating mode	(2)	l/s	0,17	0,22	0,25	0,26	0,29
Pressure drop in heating mode	(2)	kPa	12	17	20	23	37
Sound Pressure	(3)	dB(A)	39	41	44	41	45
Sound Power	(4)(7)	dB(A)	48	50	53	50	54
MED SPEED							
Fan Power Input	(1)	W	82,0	83,0	86,0	113	117
Air flow rate	(1)	m³/h	670	780	910	1010	1180
Total capacity in cooling mode	(1)	kW	3,75	4,50	5,06	5,41	6,62
Total Net Cooling Capacity	(1)(6)(7)	kW	3,67	4,42	4,98	5,30	6,51
Sensible capacity in cooling mode	(1)	kW	2,94	3,49	3,99	4,16	5,16
Net sensible cooling capacity	(1)(6)(7)	kW	2,86	3,40	3,90	4,05	5,04
Net latent power in cooling	(1)(6)(7)	kW	0,81	1,02	1,07	1,25	1,46
Max water flow	(1)	l/s	0,18	0,22	0,24	0,26	0,32
Pressure Drop in cooling mode	(1)	kPa	15	18	27	26	50
Total capacity (heating mode)	(2)	kW	4,35	5,21	5,86	6,05	7,52
Total Net Heating Capacity	(2)(6)	kW	4,43	5,29	5,94	6,16	7,64
Water flow in heating mode	(2)	l/s	0,21	0,25	0,28	0,29	0,36
Pressure drop in heating mode	(2)	kPa	17	22	25	29	55
Sound Pressure	(3)	dB(A)	45	44	47	45	51
Sound Power	(4)(7)	dB(A)	54	53	56	54	60
MAX SPEED							
Fan Power Input	(1)	W	98,0	101	104	133	137
Air flow rate	(1)	m³/h	815	890	980	1140	1310
Total capacity in cooling mode	(1)	kW	4,40	5,15	5,70	6,15	7,50
Total Net Cooling Capacity	(1)(6)(7)	kW	4,30	5,05	5,60	6,02	7,37
Sensible capacity in cooling mode	(1)	kW	3,52	3,99	4,38	4,66	5,81
Net sensible cooling capacity	(1)(6)(7)	kW	3,43	3,89	4,28	4,52	5,68
Net latent power in cooling	(1)(6)(7)	kW	0,88	1,16	1,32	1,50	1,69
Max water flow	(1)	l/s	0,21	0,25	0,27	0,29	0,36
Pressure Drop in cooling mode	(1)	kPa	21	24	35	33	64
Total capacity (heating mode)	(2)	kW	5,14	5,88	6,55	6,82	8,51
Total Net Heating Capacity	(2)(6)	kW	5,24	5,98	6,66	6,96	8,65
Water flow in heating mode	(2)	l/s	0,25	0,28	0,32	0,33	0,41
Pressure drop in heating mode	(2)	kPa	24	27	31	36	70
Sound Pressure	(3)	dB(A)	50	47	50	50	55
Sound Power	(4)(7)	dB(A)	59	56	59	59	64
SIZE AND WEIGHT							
A	(5)	mm	850	1050	1050	1250	1250
B	(5)	mm	215	215	215	215	215
H	(5)	mm	450	450	450	450	450
Operating weight	(5)	kg	20	23	24	27	28

Notes:
1 Room temperature 27 °C d.b./19 °C w.b.; Chilled water (in/out) 7/12 °C.
2 Room temperature 20 °C d.b.; Hot water (in/out) 45/40 °C
3 Sound pressure level in free field on a reflective surface, 1 m from fan front and 1 m from the ground. Non -binding value obtained fron sound power level.
4 Sound power on the basis of measurements made in compliance with ISO 3741 and Eurovent 8/2.
5 Unit in standard configuration/execution, without optional accessories.
6 Values in compliance with EN14511-3:2013.
7 Values in compliance with [REGULATION (EU) N. 2016/2281]
Certified data in EUROVENT

a-LIFE2 / DLIO-DFIO			0102	0202	0302	0402	0502
ELECTRICAL DATA							
Power supply		V/ph/Hz	230/1/50	230/1/50	230/1/50	230/1/50	230/1/50
2 PIPES SYSTEM CONFIGURATION							
ENERGY EFFICIENCY							
COOLING (EN14511 VALUE)							
FCEER	(1)(6)	kW/kW	46	65	61	65	59
FCEER Class			E	D	D	D	D
HEATING ONLY (EN14511 VALUE)							
FCCOP	(2)(6)	kW/kW	55	78	71	74	69
FCCOP Class			E	D	D	D	E
PERFORMANCE							
MIN SPEED							
Fan Power Input	(1)	W	20,0	20,0	29,0	32,0	40,0
Air flow rate	(1)	m³/h	180	270	350	380	500
Total capacity in cooling mode	(1)	kW	1,00	1,49	2,07	2,31	2,85
Total Net Cooling Capacity	(1)(6)(7)	kW	0,98	1,47	2,04	2,28	2,81
Sensible capacity in cooling mode	(1)	kW	0,78	1,18	1,59	1,75	2,22
Net sensible cooling capacity	(1)(6)(7)	kW	0,76	1,16	1,56	1,72	2,18
Net latent power in cooling	(1)(6)(7)	kW	0,22	0,31	0,48	0,56	0,63
Max water flow	(1)	l/s	0,05	0,07	0,10	0,11	0,14
Pressure Drop in cooling mode	(1)	kPa	4	7	16	16	7
Total capacity (heating mode)	(2)	kW	1,19	1,77	2,37	2,59	3,23
Total Net Heating Capacity	(2)(6)	kW	1,21	1,79	2,40	2,63	3,27
Water flow in heating mode	(2)	l/s	0,06	0,09	0,11	0,13	0,16
Pressure drop in heating mode	(2)	kPa	5	9	19	21	8
Sound Pressure	(3)	dB(A)	28	37	36	37	37
Sound Power	(4)(7)	dB(A)	37	46	45	46	46
MED SPEED							
Fan Power Input	(1)	W	29,0	32,0	47,0	50,0	67,0
Air flow rate	(1)	m³/h	210	290	410	500	560
Total capacity in cooling mode	(1)	kW	1,16	1,74	2,33	2,85	3,08
Total Net Cooling Capacity	(1)(6)(7)	kW	1,13	1,71	2,28	2,80	3,01
Sensible capacity in cooling mode	(1)	kW	0,90	1,31	1,77	2,22	2,43
Net sensible cooling capacity	(1)(6)(7)	kW	0,87	1,28	1,72	2,17	2,37
Net latent power in cooling	(1)(6)(7)	kW	0,26	0,43	0,56	0,63	0,65
Max water flow	(1)	l/s	0,06	0,08	0,11	0,14	0,15
Pressure Drop in cooling mode	(1)	kPa	5	10	21	24	8
Total capacity (heating mode)	(2)	kW	1,38	1,96	2,61	3,26	3,54
Total Net Heating Capacity	(2)(6)	kW	1,40	1,99	2,66	3,31	3,61
Water flow in heating mode	(2)	l/s	0,07	0,09	0,13	0,16	0,17
Pressure drop in heating mode	(2)	kPa	7	11	23	32	10
Sound Pressure	(3)	dB(A)	31	39	37	42	39
Sound Power	(4)(7)	dB(A)	40	48	46	51	48
MAX SPEED							
Fan Power Input	(1)	W	34,0	34,0	56,0	59,0	80,0
Air flow rate	(1)	m³/h	300	360	520	590	660
Total capacity in cooling mode	(1)	kW	1,50	2,00	2,85	3,40	3,80
Total Net Cooling Capacity	(1)(6)(7)	kW	1,47	1,97	2,80	3,34	3,72
Sensible capacity in cooling mode	(1)	kW	1,23	1,59	2,22	2,61	2,94
Net sensible cooling capacity	(1)(6)(7)	kW	1,20	1,55	2,17	2,55	2,87
Net latent power in cooling	(1)(6)(7)	kW	0,27	0,41	0,63	0,79	0,86
Max water flow	(1)	l/s	0,07	0,10	0,14	0,16	0,18
Pressure Drop in cooling mode	(1)	kPa	9	13	31	34	13
Total capacity (heating mode)	(2)	kW	1,86	2,40	3,27	3,71	4,38
Total Net Heating Capacity	(2)(6)	kW	1,89	2,43	3,33	3,77	4,46
Water flow in heating mode	(2)	l/s	0,09	0,12	0,16	0,18	0,21
Pressure drop in heating mode	(2)	kPa	12	16	35	41	14
Sound Pressure	(3)	dB(A)	39	45	42	47	45
Sound Power	(4)(7)	dB(A)	48	54	51	56	54
SIZE AND WEIGHT							
A	(5)	mm	545	545	745	745	945
B	(5)	mm	215	215	215	215	215
H	(5)	mm	450	450	450	450	450
Operating weight	(5)	kg	11	12	14	15	20

Notes:
1 Room temperature 27 °C d.b./19 °C w.b.; Chilled water (in/out) 7/12 °C.
2 Room temperature 20 °C d.b.; Hot water (in/out) 45/40 °C
3 Sound pressure level in free field on a reflective surface, 1 m from fan front and 1 m from the ground. Non -binding value obtained fron sound power level.
4 Sound power on the basis of measurements made in compliance with ISO 3741 and Eurovent 8/2.
5 Unit in standard configuration/execution, without optional accessories.
6 Values in compliance with EN14511-3:2013.
7 Values in compliance with [REGULATION (EU) N. 2016/2281]

a-LIFE2 / DLIO-DFIO			0602	0702	0802	0902	1002
ELECTRICAL DATA							
Power supply		V/ph/Hz	230/1/50	230/1/50	230/1/50	230/1/50	230/1/50
2 PIPES SYSTEM CONFIGURATION							
ENERGY EFFICIENCY							
COOLING (EN14511 VALUE)							
FCEER	(1)(6)	kW/kW	53	70	74	61	70
FCEER Class			E	D	D	D	D
HEATING ONLY (EN14511 VALUE)							
FCCOP	(2)(6)	kW/kW	62	82	88	71	80
FCCOP Class			E	D	D	D	D
PERFORMANCE							
MIN SPEED							
Fan Power Input	(1)	W	51,0	47,0	50,0	63,0	65,0
Air flow rate	(1)	m³/h	550	640	760	790	920
Total capacity in cooling mode	(1)	kW	3,02	4,06	4,50	4,71	5,40
Total Net Cooling Capacity	(1)(6)(7)	kW	2,97	4,01	4,45	4,65	5,34
Sensible capacity in cooling mode	(1)	kW	2,39	3,00	3,44	3,59	4,14
Net sensible cooling capacity	(1)(6)(7)	kW	2,34	2,96	3,39	3,53	4,08
Net latent power in cooling	(1)(6)(7)	kW	0,63	1,06	1,06	1,12	1,26
Max water flow	(1)	l/s	0,14	0,19	0,22	0,23	0,26
Pressure Drop in cooling mode	(1)	kPa	10	15	22	19	33
Total capacity (heating mode)	(2)	kW	3,52	4,57	5,19	5,31	6,02
Total Net Heating Capacity	(2)(6)	kW	3,57	4,62	5,24	5,37	6,09
Water flow in heating mode	(2)	l/s	0,17	0,22	0,25	0,26	0,29
Pressure drop in heating mode	(2)	kPa	12	17	20	23	37
Sound Pressure	(3)	dB(A)	39	41	44	41	45
Sound Power	(4)(7)	dB(A)	48	50	53	50	54
MED SPEED							
Fan Power Input	(1)	W	82,0	83,0	86,0	113	117
Air flow rate	(1)	m³/h	670	780	910	1010	1180
Total capacity in cooling mode	(1)	kW	3,75	4,50	5,06	5,41	6,62
Total Net Cooling Capacity	(1)(6)(7)	kW	3,67	4,42	4,98	5,30	6,51
Sensible capacity in cooling mode	(1)	kW	2,94	3,49	3,99	4,16	5,16
Net sensible cooling capacity	(1)(6)(7)	kW	2,86	3,40	3,90	4,05	5,04
Net latent power in cooling	(1)(6)(7)	kW	0,81	1,02	1,07	1,25	1,46
Max water flow	(1)	l/s	0,18	0,22	0,24	0,26	0,32
Pressure Drop in cooling mode	(1)	kPa	15	18	27	26	50
Total capacity (heating mode)	(2)	kW	4,35	5,21	5,86	6,05	7,52
Total Net Heating Capacity	(2)(6)	kW	4,43	5,29	5,94	6,16	7,64
Water flow in heating mode	(2)	l/s	0,21	0,25	0,28	0,29	0,36
Pressure drop in heating mode	(2)	kPa	17	22	25	29	55
Sound Pressure	(3)	dB(A)	45	44	47	45	51
Sound Power	(4)(7)	dB(A)	54	53	56	54	60
MAX SPEED							
Fan Power Input	(1)	W	98,0	101	104	133	137
Air flow rate	(1)	m³/h	815	890	980	1140	1310
Total capacity in cooling mode	(1)	kW	4,40	5,15	5,70	6,15	7,50
Total Net Cooling Capacity	(1)(6)(7)	kW	4,30	5,05	5,60	6,02	7,37
Sensible capacity in cooling mode	(1)	kW	3,52	3,99	4,38	4,66	5,81
Net sensible cooling capacity	(1)(6)(7)	kW	3,43	3,89	4,28	4,52	5,68
Net latent power in cooling	(1)(6)(7)	kW	0,88	1,16	1,32	1,50	1,69
Max water flow	(1)	l/s	0,21	0,25	0,27	0,29	0,36
Pressure Drop in cooling mode	(1)	kPa	21	24	35	33	64
Total capacity (heating mode)	(2)	kW	5,14	5,88	6,55	6,82	8,51
Total Net Heating Capacity	(2)(6)	kW	5,24	5,98	6,66	6,96	8,65
Water flow in heating mode	(2)	l/s	0,25	0,28	0,32	0,33	0,41
Pressure drop in heating mode	(2)	kPa	24	27	31	36	70
Sound Pressure	(3)	dB(A)	50	47	50	50	55
Sound Power	(4)(7)	dB(A)	59	56	59	59	64
SIZE AND WEIGHT							
A	(5)	mm	945	1145	1145	1345	1345
B	(5)	mm	215	215	215	215	215
H	(5)	mm	450	450	450	450	450
Operating weight	(5)	kg	21	23	25	27	29

Notes:
1 Room temperature 27 °C d.b./19 °C w.b.; Chilled water (in/out) 7/12 °C.
2 Room temperature 20 °C d.b.; Hot water (in/out) 45/40 °C
3 Sound pressure level in free field on a reflective surface, 1 m from fan front and 1 m from the ground. Non -binding value obtained fron sound power level.
4 Sound power on the basis of measurements made in compliance with ISO 3741 and Eurovent 8/2.
5 Unit in standard configuration/execution, without optional accessories.
6 Values in compliance with EN14511-3:2013.
7 Values in compliance with [REGULATION (EU) N. 2016/2281]
Certified data in EUROVENT

a-LIFE2 / DLMV-DFMV / DLMO-DFMO			0102	0202	0302	0402	0502
ELECTRICAL DATA							
Power supply		V/ph/Hz	230/1/50	230/1/50	230/1/50	230/1/50	230/1/50
2 PIPES SYSTEM CONFIGURATION							
ENERGY EFFICIENCY							
COOLING (EN14511 VALUE)							
FCEER	(1)(6)	kW/kW	46	65	61	65	59
FCEER Class			E	D	D	D	D
HEATING ONLY (EN14511 VALUE)							
FCCOP	(2)(6)	kW/kW	55	78	71	74	69
FCCOP Class			E	D	D	D	E
PERFORMANCE							
MIN SPEED							
Fan Power Input	(1)	W	20,0	20,0	29,0	32,0	40,0
Air flow rate	(1)	m³/h	180	270	350	380	500
Total capacity in cooling mode	(1)	kW	1,00	1,49	2,07	2,31	2,85
Total Net Cooling Capacity	(1)(6)(7)	kW	0,98	1,47	2,04	2,28	2,81
Sensible capacity in cooling mode	(1)	kW	0,78	1,18	1,59	1,75	2,22
Net sensible cooling capacity	(1)(6)(7)	kW	0,76	1,16	1,56	1,72	2,18
Net latent power in cooling	(1)(6)(7)	kW	0,22	0,31	0,48	0,56	0,63
Max water flow	(1)	l/s	0,05	0,07	0,10	0,11	0,14
Pressure Drop in cooling mode	(1)	kPa	4	7	16	16	7
Total capacity (heating mode)	(2)	kW	1,19	1,77	2,37	2,59	3,23
Total Net Heating Capacity	(2)(6)	kW	1,21	1,79	2,40	2,63	3,27
Water flow in heating mode	(2)	l/s	0,06	0,09	0,11	0,13	0,16
Pressure drop in heating mode	(2)	kPa	5	9	19	21	8
Sound Pressure	(3)	dB(A)	28	37	36	37	37
Sound Power	(4)(7)	dB(A)	37	46	45	46	46
MED SPEED							
Fan Power Input	(1)	W	29,0	32,0	47,0	50,0	67,0
Air flow rate	(1)	m³/h	210	290	410	500	560
Total capacity in cooling mode	(1)	kW	1,16	1,74	2,33	2,85	3,08
Total Net Cooling Capacity	(1)(6)(7)	kW	1,13	1,71	2,28	2,80	3,01
Sensible capacity in cooling mode	(1)	kW	0,90	1,31	1,77	2,22	2,43
Net sensible cooling capacity	(1)(6)(7)	kW	0,87	1,28	1,72	2,17	2,37
Net latent power in cooling	(1)(6)(7)	kW	0,26	0,43	0,56	0,63	0,65
Max water flow	(1)	l/s	0,06	0,08	0,11	0,14	0,15
Pressure Drop in cooling mode	(1)	kPa	5	10	21	24	8
Total capacity (heating mode)	(2)	kW	1,38	1,96	2,61	3,26	3,54
Total Net Heating Capacity	(2)(6)	kW	1,40	1,99	2,66	3,31	3,61
Water flow in heating mode	(2)	l/s	0,07	0,09	0,13	0,16	0,17
Pressure drop in heating mode	(2)	kPa	7	11	23	32	10
Sound Pressure	(3)	dB(A)	31	39	37	42	39
Sound Power	(4)(7)	dB(A)	40	48	46	51	48
MAX SPEED							
Fan Power Input	(1)	W	34,0	34,0	56,0	59,0	80,0
Air flow rate	(1)	m³/h	300	360	520	590	660
Total capacity in cooling mode	(1)	kW	1,50	2,00	2,85	3,40	3,80
Total Net Cooling Capacity	(1)(6)(7)	kW	1,47	1,97	2,80	3,34	3,72
Sensible capacity in cooling mode	(1)	kW	1,23	1,59	2,22	2,61	2,94
Net sensible cooling capacity	(1)(6)(7)	kW	1,20	1,55	2,17	2,55	2,87
Net latent power in cooling	(1)(6)(7)	kW	0,27	0,41	0,63	0,79	0,86
Max water flow	(1)	l/s	0,07	0,10	0,14	0,16	0,18
Pressure Drop in cooling mode	(1)	kPa	9	13	31	34	13
Total capacity (heating mode)	(2)	kW	1,86	2,40	3,27	3,71	4,38
Total Net Heating Capacity	(2)(6)	kW	1,89	2,43	3,33	3,77	4,46
Water flow in heating mode	(2)	l/s	0,09	0,12	0,16	0,18	0,21
Pressure drop in heating mode	(2)	kPa	12	16	35	41	14
Sound Pressure	(3)	dB(A)	39	45	42	47	45
Sound Power	(4)(7)	dB(A)	48	54	51	56	54
SIZE AND WEIGHT							
A	(5)	mm	922	922	1112	1112	1302
B	(5)	mm	233	233	233	233	233
H	(5)	mm	499	499	499	499	499
Operating weight	(5)	kg	16	17	20	21	27

Notes:
1 Room temperature 27 °C d.b./19 °C w.b.; Chilled water (in/out) 7/12 °C.
2 Room temperature 20 °C d.b.; Hot water (in/out) 45/40 °C
3 Sound pressure level in free field on a reflective surface, 1 m from fan front and 1 m from the ground. Non -binding value obtained fron sound power level.
4 Sound power on the basis of measurements made in compliance with ISO 3741 and Eurovent 8/2.
5 Unit in standard configuration/execution, without optional accessories.
6 Values in compliance with EN14511-3:2013.
7 Values in compliance with [REGULATION (EU) N. 2016/2281]

a-LIFE2 / DLMV-DFMV / DLMO-DFMO			0602	0702	0802	0902	1002
ELECTRICAL DATA							
Power supply		V/ph/Hz	230/1/50	230/1/50	230/1/50	230/1/50	230/1/50
2 PIPES SYSTEM CONFIGURATION							
ENERGY EFFICIENCY							
COOLING (EN14511 VALUE)							
FCEER	(1)(6)	kW/kW	53	70	74	61	70
FCEER Class			E	D	D	D	D
HEATING ONLY (EN14511 VALUE)							
FCCOP	(2)(6)	kW/kW	62	82	88	71	80
FCCOP Class			E	D	D	D	D
PERFORMANCE							
MIN SPEED							
Fan Power Input	(1)	W	51,0	47,0	50,0	63,0	65,0
Air flow rate	(1)	m³/h	550	640	760	790	920
Total capacity in cooling mode	(1)	kW	3,02	4,06	4,50	4,71	5,40
Total Net Cooling Capacity	(1)(6)(7)	kW	2,97	4,01	4,45	4,65	5,34
Sensible capacity in cooling mode	(1)	kW	2,39	3,00	3,44	3,59	4,14
Net sensible cooling capacity	(1)(6)(7)	kW	2,34	2,96	3,39	3,53	4,08
Net latent power in cooling	(1)(6)(7)	kW	0,63	1,06	1,06	1,12	1,26
Max water flow	(1)	l/s	0,14	0,19	0,22	0,23	0,26
Pressure Drop in cooling mode	(1)	kPa	10	15	22	19	33
Total capacity (heating mode)	(2)	kW	3,52	4,57	5,19	5,31	6,02
Total Net Heating Capacity	(2)(6)	kW	3,57	4,62	5,24	5,37	6,09
Water flow in heating mode	(2)	l/s	0,17	0,22	0,25	0,26	0,29
Pressure drop in heating mode	(2)	kPa	12	17	20	23	37
Sound Pressure	(3)	dB(A)	39	41	44	41	45
Sound Power	(4)(7)	dB(A)	48	50	53	50	54
MED SPEED							
Fan Power Input	(1)	W	82,0	83,0	86,0	113	117
Air flow rate	(1)	m³/h	670	780	910	1010	1180
Total capacity in cooling mode	(1)	kW	3,75	4,50	5,06	5,41	6,62
Total Net Cooling Capacity	(1)(6)(7)	kW	3,67	4,42	4,98	5,30	6,51
Sensible capacity in cooling mode	(1)	kW	2,94	3,49	3,99	4,16	5,16
Net sensible cooling capacity	(1)(6)(7)	kW	2,86	3,40	3,90	4,05	5,04
Net latent power in cooling	(1)(6)(7)	kW	0,81	1,02	1,07	1,25	1,46
Max water flow	(1)	l/s	0,18	0,22	0,24	0,26	0,32
Pressure Drop in cooling mode	(1)	kPa	15	18	27	26	50
Total capacity (heating mode)	(2)	kW	4,35	5,21	5,86	6,05	7,52
Total Net Heating Capacity	(2)(6)	kW	4,43	5,29	5,94	6,16	7,64
Water flow in heating mode	(2)	l/s	0,21	0,25	0,28	0,29	0,36
Pressure drop in heating mode	(2)	kPa	17	22	25	29	55
Sound Pressure	(3)	dB(A)	45	44	47	45	51
Sound Power	(4)(7)	dB(A)	54	53	56	54	60
MAX SPEED							
Fan Power Input	(1)	W	98,0	101	104	133	137
Air flow rate	(1)	m³/h	815	890	980	1140	1310
Total capacity in cooling mode	(1)	kW	4,40	5,15	5,70	6,15	7,50
Total Net Cooling Capacity	(1)(6)(7)	kW	4,30	5,05	5,60	6,02	7,37
Sensible capacity in cooling mode	(1)	kW	3,52	3,99	4,38	4,66	5,81
Net sensible cooling capacity	(1)(6)(7)	kW	3,43	3,89	4,28	4,52	5,68
Net latent power in cooling	(1)(6)(7)	kW	0,88	1,16	1,32	1,50	1,69
Max water flow	(1)	l/s	0,21	0,25	0,27	0,29	0,36
Pressure Drop in cooling mode	(1)	kPa	21	24	35	33	64
Total capacity (heating mode)	(2)	kW	5,14	5,88	6,55	6,82	8,51
Total Net Heating Capacity	(2)(6)	kW	5,24	5,98	6,66	6,96	8,65
Water flow in heating mode	(2)	l/s	0,25	0,28	0,32	0,33	0,41
Pressure drop in heating mode	(2)	kPa	24	27	31	36	70
Sound Pressure	(3)	dB(A)	50	47	50	50	55
Sound Power	(4)(7)	dB(A)	59	56	59	59	64
SIZE AND WEIGHT							
A	(5)	mm	1302	1492	1492	1682	1682
B	(5)	mm	233	233	233	233	233
H	(5)	mm	499	499	499	499	499
Operating weight	(5)	kg	28	32	33	37	38

Notes:
1 Room temperature 27 °C d.b./19 °C w.b.; Chilled water (in/out) 7/12 °C.
2 Room temperature 20 °C d.b.; Hot water (in/out) 45/40 °C
3 Sound pressure level in free field on a reflective surface, 1 m from fan front and 1 m from the ground. Non -binding value obtained fron sound power level.
4 Sound power on the basis of measurements made in compliance with ISO 3741 and Eurovent 8/2.
5 Unit in standard configuration/execution, without optional accessories.
6 Values in compliance with EN14511-3:2013.
7 Values in compliance with [REGULATION (EU) N. 2016/2281]
Certified data in EUROVENT

a-LIFE2 / DLIV-DFIV			0104	0204	0304	0404	0504
ELECTRICAL DATA							
Power supply		V/ph/Hz	230/1/50	230/1/50	230/1/50	230/1/50	230/1/50
4 PIPES SYSTEM CONFIGURATION							
ENERGY EFFICIENCY							
COOLING (EN14511 VALUE)							
FCEER	(1)(6)	kW/kW	46	65	61	65	70
FCEER Class			E	D	D	D	D
HEATING ONLY (EN14511 VALUE)							
FCCOP	(2)(6)	kW/kW	34	49	45	48	56
FCCOP Class			G	F	F	F	E
PERFORMANCE							
MIN SPEED							
Fan Power Input	(1)	W	20,0	20,0	29,0	32,0	34,0
Air flow rate	(1)	m³/h	180	270	350	380	500
Total capacity in cooling mode	(1)	kW	1,00	1,49	2,07	2,31	2,85
Total Net Cooling Capacity	(1)(6)(7)	kW	0,98	1,47	2,04	2,28	2,82
Sensible capacity in cooling mode	(1)	kW	0,78	1,18	1,59	1,75	2,22
Net sensible cooling capacity	(1)(6)(7)	kW	0,76	1,16	1,56	1,72	2,19
Net latent power in cooling	(1)(6)(7)	kW	0,22	0,31	0,48	0,56	0,63
Max water flow	(1)	l/s	0,05	0,07	0,10	0,11	0,14
Pressure Drop in cooling mode	(1)	kPa	4	7	16	16	7
Total capacity (heating mode)	(2)	kW	0,74	1,10	1,49	1,67	2,23
Total Net Heating Capacity	(2)(6)	kW	0,76	1,12	1,52	1,70	2,26
Water flow in heating mode	(2)	l/s	0,02	0,03	0,04	0,04	0,05
Pressure drop in heating mode	(2)	kPa	2	5	6	7	13
Sound Pressure	(3)	dB(A)	28	37	36	37	37
Sound Power	(4)(7)	dB(A)	37	46	45	46	46
MED SPEED							
Fan Power Input	(1)	W	29,0	32,0	47,0	50,0	56,0
Air flow rate	(1)	m³/h	210	290	410	500	560
Total capacity in cooling mode	(1)	kW	1,16	1,74	2,33	2,85	3,08
Total Net Cooling Capacity	(1)(6)(7)	kW	1,13	1,71	2,28	2,80	3,03
Sensible capacity in cooling mode	(1)	kW	0,90	1,31	1,77	2,22	2,43
Net sensible cooling capacity	(1)(6)(7)	kW	0,87	1,28	1,72	2,17	2,38
Net latent power in cooling	(1)(6)(7)	kW	0,26	0,43	0,56	0,63	0,65
Max water flow	(1)	l/s	0,06	0,08	0,11	0,14	0,15
Pressure Drop in cooling mode	(1)	kPa	5	10	21	24	8
Total capacity (heating mode)	(2)	kW	0,86	1,29	1,68	2,05	2,41
Total Net Heating Capacity	(2)(6)	kW	0,89	1,32	1,73	2,10	2,47
Water flow in heating mode	(2)	l/s	0,02	0,03	0,04	0,05	0,06
Pressure drop in heating mode	(2)	kPa	3	7	7	11	15
Sound Pressure	(3)	dB(A)	31	39	37	42	39
Sound Power	(4)(7)	dB(A)	40	48	46	51	48
MAX SPEED							
Fan Power Input	(1)	W	34,0	34,0	56,0	59,0	67,0
Air flow rate	(1)	m³/h	300	360	520	590	660
Total capacity in cooling mode	(1)	kW	1,50	2,00	2,85	3,40	3,80
Total Net Cooling Capacity	(1)(6)(7)	kW	1,47	1,97	2,80	3,34	3,73
Sensible capacity in cooling mode	(1)	kW	1,23	1,59	2,22	2,61	2,94
Net sensible cooling capacity	(1)(6)(7)	kW	1,20	1,55	2,17	2,55	2,88
Net latent power in cooling	(1)(6)(7)	kW	0,27	0,41	0,63	0,79	0,86
Max water flow	(1)	l/s	0,07	0,10	0,14	0,16	0,18
Pressure Drop in cooling mode	(1)	kPa	9	13	31	34	13
Total capacity (heating mode)	(2)	kW	1,11	1,48	2,05	2,45	2,97
Total Net Heating Capacity	(2)(6)	kW	1,15	1,52	2,11	2,51	3,04
Water flow in heating mode	(2)	l/s	0,03	0,04	0,05	0,06	0,07
Pressure drop in heating mode	(2)	kPa	5	9	11	15	22
Sound Pressure	(3)	dB(A)	39	45	42	47	45
Sound Power	(4)(7)	dB(A)	48	54	51	56	54
SIZE AND WEIGHT							
A	(5)	mm	450	450	650	650	850
B	(5)	mm	215	215	215	215	215
H	(5)	mm	450	450	450	450	450
Operating weight	(5)	kg	12	12	14	15	21

Notes:
1 Room temperature 27°C d.b./18,9°C w.b., Chilled water (in/out) 7°C/12°C.
2 Room temperature 20 °C d.b., hot water (in/out) 65/55 °C
3 Sound pressure level in free field on a reflective surface, 1 m from fan front and 1 m from the ground. Non -binding value obtained fron sound power level.
4 Sound power on the basis of measurements made in compliance with ISO 3741 and Eurovent 8/2.
5 Unit in standard configuration/execution, without optional accessories.
6 Values in compliance with EN14511-3:2013.
7 Values in compliance with [REGULATION (EU) N. 2016/2281]

a-LIFE2 / DLIV-DFIV			0604	0704	0804	0904	1004
ELECTRICAL DATA							
Power supply		V/ph/Hz	230/1/50	230/1/50	230/1/50	230/1/50	230/1/50
4 PIPES SYSTEM CONFIGURATION							
ENERGY EFFICIENCY							
COOLING (EN14511 VALUE)							
FCEER	(1)(6)	kW/kW	93	70	74	61	70
FCEER Class			C	D	D	D	D
HEATING ONLY (EN14511 VALUE)							
FCCOP	(2)(6)	kW/kW	73	54	57	47	53
FCCOP Class			D	E	E	F	E
PERFORMANCE							
MIN SPEED							
Fan Power Input	(1)	W	29,0	47,0	50,0	63,0	65,0
Air flow rate	(1)	m³/h	550	640	760	790	920
Total capacity in cooling mode	(1)	kW	3,02	4,06	4,50	4,71	5,40
Total Net Cooling Capacity	(1)(6)(7)	kW	2,99	4,01	4,45	4,65	5,34
Sensible capacity in cooling mode	(1)	kW	2,39	3,00	3,44	3,59	4,14
Net sensible cooling capacity	(1)(6)(7)	kW	2,37	2,96	3,39	3,53	4,08
Net latent power in cooling	(1)(6)(7)	kW	0,63	1,06	1,06	1,12	1,26
Max water flow	(1)	l/s	0,14	0,19	0,22	0,23	0,26
Pressure Drop in cooling mode	(1)	kPa	8	15	22	19	24
Total capacity (heating mode)	(2)	kW	2,36	3,05	3,39	3,53	4,04
Total Net Heating Capacity	(2)(6)	kW	2,38	3,10	3,44	3,59	4,11
Water flow in heating mode	(2)	l/s	0,06	0,07	0,08	0,09	0,10
Pressure drop in heating mode	(2)	kPa	14	8	9	8	10
Sound Pressure	(3)	dB(A)	39	41	44	41	45
Sound Power	(4)(7)	dB(A)	48	50	53	50	54
MED SPEED							
Fan Power Input	(1)	W	47,0	83,0	86,0	113	117
Air flow rate	(1)	m³/h	670	780	910	1010	1180
Total capacity in cooling mode	(1)	kW	3,75	4,50	5,06	5,41	6,62
Total Net Cooling Capacity	(1)(6)(7)	kW	3,70	4,42	4,98	5,30	6,51
Sensible capacity in cooling mode	(1)	kW	2,94	3,49	3,99	4,16	5,16
Net sensible cooling capacity	(1)(6)(7)	kW	2,90	3,40	3,90	4,05	5,04
Net latent power in cooling	(1)(6)(7)	kW	0,81	1,02	1,07	1,25	1,46
Max water flow	(1)	l/s	0,18	0,22	0,24	0,26	0,32
Pressure Drop in cooling mode	(1)	kPa	12	18	27	26	37
Total capacity (heating mode)	(2)	kW	2,93	3,39	3,80	4,05	4,95
Total Net Heating Capacity	(2)(6)	kW	2,98	3,47	3,89	4,17	5,07
Water flow in heating mode	(2)	l/s	0,07	0,08	0,09	0,10	0,12
Pressure drop in heating mode	(2)	kPa	21	9	12	10	15
Sound Pressure	(3)	dB(A)	45	44	47	45	51
Sound Power	(4)(7)	dB(A)	54	53	56	54	60
MAX SPEED							
Fan Power Input	(1)	W	56,0	101	104	133	137
Air flow rate	(1)	m³/h	815	890	980	1140	1310
Total capacity in cooling mode	(1)	kW	4,40	5,15	5,70	6,15	7,50
Total Net Cooling Capacity	(1)(6)(7)	kW	4,35	5,05	5,60	6,02	7,37
Sensible capacity in cooling mode	(1)	kW	3,52	3,99	4,38	4,66	5,81
Net sensible cooling capacity	(1)(6)(7)	kW	3,47	3,89	4,28	4,52	5,68
Net latent power in cooling	(1)(6)(7)	kW	0,88	1,16	1,32	1,50	1,69
Max water flow	(1)	l/s	0,21	0,25	0,27	0,29	0,36
Pressure Drop in cooling mode	(1)	kPa	17	24	35	33	47
Total capacity (heating mode)	(2)	kW	3,44	3,88	4,28	4,60	5,62
Total Net Heating Capacity	(2)(6)	kW	3,50	3,98	4,39	4,74	5,75
Water flow in heating mode	(2)	l/s	0,08	0,09	0,10	0,11	0,14
Pressure drop in heating mode	(2)	kPa	28	12	15	13	19
Sound Pressure	(3)	dB(A)	50	47	50	48	55
Sound Power	(4)(7)	dB(A)	59	56	59	57	64
SIZE AND WEIGHT							
A	(5)	mm	850	1050	1050	1250	1250
B	(5)	mm	215	215	215	215	215
H	(5)	mm	450	450	450	450	450
Operating weight	(5)	kg	22	24	25	28	29

Notes:
1 Room temperature 27°C d.b./18,9°C w.b., Chilled water (in/out) 7°C/12°C.
2 Room temperature 20 °C d.b., hot water (in/out) 65/55 °C
3 Sound pressure level in free field on a reflective surface, 1 m from fan front and 1 m from the ground. Non -binding value obtained fron sound power level.
4 Sound power on the basis of measurements made in compliance with ISO 3741 and Eurovent 8/2.
5 Unit in standard configuration/execution, without optional accessories.
6 Values in compliance with EN14511-3:2013.
7 Values in compliance with [REGULATION (EU) N. 2016/2281]
Certified data in EUROVENT

a-LIFE2 / DLIO-DFIO			0104	0204	0304	0404	0504
ELECTRICAL DATA							
Power supply		V/ph/Hz	230/1/50	230/1/50	230/1/50	230/1/50	230/1/50
4 PIPES SYSTEM CONFIGURATION							
ENERGY EFFICIENCY							
COOLING (EN14511 VALUE)							
FCEER	(1)(6)	kW/kW	46	65	61	65	70
FCEER Class			E	D	D	D	D
HEATING ONLY (EN14511 VALUE)							
FCCOP	(2)(6)	kW/kW	34	49	45	48	56
FCCOP Class			G	F	F	F	E
PERFORMANCE							
MIN SPEED							
Fan Power Input	(1)	W	20,0	20,0	29,0	32,0	34,0
Air flow rate	(1)	m³/h	180	270	350	380	500
Total capacity in cooling mode	(1)	kW	1,00	1,49	2,07	2,31	2,85
Total Net Cooling Capacity	(1)(6)(7)	kW	0,98	1,47	2,04	2,28	2,82
Sensible capacity in cooling mode	(1)	kW	0,78	1,18	1,59	1,75	2,22
Net sensible cooling capacity	(1)(6)(7)	kW	0,76	1,16	1,56	1,72	2,19
Net latent power in cooling	(1)(6)(7)	kW	0,22	0,31	0,48	0,56	0,63
Max water flow	(1)	l/s	0,05	0,07	0,10	0,11	0,14
Pressure Drop in cooling mode	(1)	kPa	4	7	16	16	7
Total capacity (heating mode)	(2)	kW	0,74	1,10	1,49	1,67	2,23
Total Net Heating Capacity	(2)(6)	kW	0,76	1,12	1,52	1,70	2,26
Water flow in heating mode	(2)	l/s	0,02	0,03	0,04	0,04	0,05
Pressure drop in heating mode	(2)	kPa	2	5	6	7	13
Sound Pressure	(3)	dB(A)	28	37	36	37	37
Sound Power	(4)(7)	dB(A)	37	46	45	46	46
MED SPEED							
Fan Power Input	(1)	W	29,0	32,0	47,0	50,0	56,0
Air flow rate	(1)	m³/h	210	290	410	500	560
Total capacity in cooling mode	(1)	kW	1,16	1,74	2,33	2,85	3,08
Total Net Cooling Capacity	(1)(6)(7)	kW	1,13	1,71	2,28	2,80	3,03
Sensible capacity in cooling mode	(1)	kW	0,90	1,31	1,77	2,22	2,43
Net sensible cooling capacity	(1)(6)(7)	kW	0,87	1,28	1,72	2,17	2,38
Net latent power in cooling	(1)(6)(7)	kW	0,26	0,43	0,56	0,63	0,65
Max water flow	(1)	l/s	0,06	0,08	0,11	0,14	0,15
Pressure Drop in cooling mode	(1)	kPa	5	10	21	24	8
Total capacity (heating mode)	(2)	kW	0,86	1,29	1,68	2,05	2,41
Total Net Heating Capacity	(2)(6)	kW	0,89	1,32	1,73	2,10	2,47
Water flow in heating mode	(2)	l/s	0,02	0,03	0,04	0,05	0,06
Pressure drop in heating mode	(2)	kPa	3	7	7	11	15
Sound Pressure	(3)	dB(A)	31	39	37	42	39
Sound Power	(4)(7)	dB(A)	40	48	46	51	48
MAX SPEED							
Fan Power Input	(1)	W	34,0	34,0	56,0	59,0	67,0
Air flow rate	(1)	m³/h	300	360	520	590	660
Total capacity in cooling mode	(1)	kW	1,50	2,00	2,85	3,40	3,80
Total Net Cooling Capacity	(1)(6)(7)	kW	1,47	1,97	2,80	3,34	3,73
Sensible capacity in cooling mode	(1)	kW	1,23	1,59	2,22	2,61	2,94
Net sensible cooling capacity	(1)(6)(7)	kW	1,20	1,55	2,17	2,55	2,88
Net latent power in cooling	(1)(6)(7)	kW	0,27	0,41	0,63	0,79	0,86
Max water flow	(1)	l/s	0,07	0,10	0,14	0,16	0,18
Pressure Drop in cooling mode	(1)	kPa	9	13	31	34	13
Total capacity (heating mode)	(2)	kW	1,11	1,48	2,05	2,45	2,97
Total Net Heating Capacity	(2)(6)	kW	1,15	1,52	2,11	2,51	3,04
Water flow in heating mode	(2)	l/s	0,03	0,04	0,05	0,06	0,07
Pressure drop in heating mode	(2)	kPa	5	9	11	15	22
Sound Pressure	(3)	dB(A)	39	45	42	47	45
Sound Power	(4)(7)	dB(A)	48	54	51	56	54
SIZE AND WEIGHT							
A	(5)	mm	545	545	745	745	945
B	(5)	mm	215	215	215	215	215
H	(5)	mm	450	450	450	450	450
Operating weight	(5)	kg	12	13	15	16	21

Notes:
1 Room temperature 27°C d.b./18,9°C w.b., Chilled water (in/out) 7°C/12°C.
2 Room temperature 20 °C d.b., hot water (in/out) 65/55 °C
3 Sound pressure level in free field on a reflective surface, 1 m from fan front and 1 m from the ground. Non -binding value obtained fron sound power level.
4 Sound power on the basis of measurements made in compliance with ISO 3741 and Eurovent 8/2.
5 Unit in standard configuration/execution, without optional accessories.
6 Values in compliance with EN14511-3:2013.
7 Values in compliance with [REGULATION (EU) N. 2016/2281]

a-LIFE2 / DLIO-DFIO			0604	0704	0804	0904	1004
ELECTRICAL DATA							
Power supply		V/ph/Hz	230/1/50	230/1/50	230/1/50	230/1/50	230/1/50
4 PIPES SYSTEM CONFIGURATION							
ENERGY EFFICIENCY							
COOLING (EN14511 VALUE)							
FCEER	(1)(6)	kW/kW	93	70	74	61	70
FCEER Class			C	D	D	D	D
HEATING ONLY (EN14511 VALUE)							
FCCOP	(2)(6)	kW/kW	73	54	57	47	53
FCCOP Class			D	E	E	F	E
PERFORMANCE							
MIN SPEED							
Fan Power Input	(1)	W	29,0	47,0	50,0	63,0	65,0
Air flow rate	(1)	m³/h	550	640	760	790	920
Total capacity in cooling mode	(1)	kW	3,02	4,06	4,50	4,71	5,40
Total Net Cooling Capacity	(1)(6)(7)	kW	2,99	4,01	4,45	4,65	5,34
Sensible capacity in cooling mode	(1)	kW	2,39	3,00	3,44	3,59	4,14
Net sensible cooling capacity	(1)(6)(7)	kW	2,37	2,96	3,39	3,53	4,08
Net latent power in cooling	(1)(6)(7)	kW	0,63	1,06	1,06	1,12	1,26
Max water flow	(1)	l/s	0,14	0,19	0,22	0,23	0,26
Pressure Drop in cooling mode	(1)	kPa	8	15	22	19	24
Total capacity (heating mode)	(2)	kW	2,36	3,05	3,39	3,53	4,04
Total Net Heating Capacity	(2)(6)	kW	2,38	3,10	3,44	3,59	4,11
Water flow in heating mode	(2)	l/s	0,06	0,07	0,08	0,09	0,10
Pressure drop in heating mode	(2)	kPa	14	8	9	8	10
Sound Pressure	(3)	dB(A)	39	41	44	41	45
Sound Power	(4)(7)	dB(A)	48	50	53	50	54
MED SPEED							
Fan Power Input	(1)	W	47,0	83,0	86,0	113	117
Air flow rate	(1)	m³/h	670	780	910	1010	1180
Total capacity in cooling mode	(1)	kW	3,75	4,50	5,06	5,41	6,62
Total Net Cooling Capacity	(1)(6)(7)	kW	3,70	4,42	4,98	5,30	6,51
Sensible capacity in cooling mode	(1)	kW	2,94	3,49	3,99	4,16	5,16
Net sensible cooling capacity	(1)(6)(7)	kW	2,90	3,40	3,90	4,05	5,04
Net latent power in cooling	(1)(6)(7)	kW	0,81	1,02	1,07	1,25	1,46
Max water flow	(1)	l/s	0,18	0,22	0,24	0,26	0,32
Pressure Drop in cooling mode	(1)	kPa	12	18	27	26	37
Total capacity (heating mode)	(2)	kW	2,93	3,39	3,80	4,05	4,95
Total Net Heating Capacity	(2)(6)	kW	2,98	3,47	3,89	4,17	5,07
Water flow in heating mode	(2)	l/s	0,07	0,08	0,09	0,10	0,12
Pressure drop in heating mode	(2)	kPa	21	9	12	10	15
Sound Pressure	(3)	dB(A)	45	44	47	45	51
Sound Power	(4)(7)	dB(A)	54	53	56	54	60
MAX SPEED							
Fan Power Input	(1)	W	56,0	101	104	133	137
Air flow rate	(1)	m³/h	815	890	980	1140	1310
Total capacity in cooling mode	(1)	kW	4,40	5,15	5,70	6,15	7,50
Total Net Cooling Capacity	(1)(6)(7)	kW	4,35	5,05	5,60	6,02	7,37
Sensible capacity in cooling mode	(1)	kW	3,52	3,99	4,38	4,66	5,81
Net sensible cooling capacity	(1)(6)(7)	kW	3,47	3,89	4,28	4,52	5,68
Net latent power in cooling	(1)(6)(7)	kW	0,88	1,16	1,32	1,50	1,69
Max water flow	(1)	l/s	0,21	0,25	0,27	0,29	0,36
Pressure Drop in cooling mode	(1)	kPa	17	24	35	33	47
Total capacity (heating mode)	(2)	kW	3,44	3,88	4,28	4,60	5,62
Total Net Heating Capacity	(2)(6)	kW	3,50	3,98	4,39	4,74	5,75
Water flow in heating mode	(2)	l/s	0,08	0,09	0,10	0,11	0,14
Pressure drop in heating mode	(2)	kPa	28	12	15	13	19
Sound Pressure	(3)	dB(A)	50	47	50	48	55
Sound Power	(4)(7)	dB(A)	59	56	59	57	64
SIZE AND WEIGHT							
A	(5)	mm	945	1145	1145	1345	1345
B	(5)	mm	215	215	215	215	215
H	(5)	mm	450	450	450	450	450
Operating weight	(5)	kg	22	25	26	29	30

Notes:
1 Room temperature 27°C d.b./18,9°C w.b., Chilled water (in/out) 7°C/12°C.
2 Room temperature 20 °C d.b., hot water (in/out) 65/55 °C
3 Sound pressure level in free field on a reflective surface, 1 m from fan front and 1 m from the ground. Non -binding value obtained fron sound power level.
4 Sound power on the basis of measurements made in compliance with ISO 3741 and Eurovent 8/2.
5 Unit in standard configuration/execution, without optional accessories.
6 Values in compliance with EN14511-3:2013.
7 Values in compliance with [REGULATION (EU) N. 2016/2281]
Certified data in EUROVENT

a-LIFE2 / DLMV-DFMV / DLMO-DFMO			0104	0204	0304	0404	0504
ELECTRICAL DATA							
Power supply		V/ph/Hz	230/1/50	230/1/50	230/1/50	230/1/50	230/1/50
4 PIPES SYSTEM CONFIGURATION							
ENERGY EFFICIENCY							
COOLING (EN14511 VALUE)							
FCEER	(1)(6)	kW/kW	46	65	61	65	70
FCEER Class			E	D	D	D	D
HEATING ONLY (EN14511 VALUE)							
FCCOP	(2)(6)	kW/kW	34	49	45	48	56
FCCOP Class			G	F	F	F	E
PERFORMANCE							
MIN SPEED							
Fan Power Input	(1)	W	20,0	20,0	29,0	32,0	34,0
Air flow rate	(1)	m³/h	180	270	350	380	500
Total capacity in cooling mode	(1)	kW	1,00	1,49	2,07	2,31	2,85
Total Net Cooling Capacity	(1)(6)(7)	kW	0,98	1,47	2,04	2,28	2,82
Sensible capacity in cooling mode	(1)	kW	0,78	1,18	1,59	1,75	2,22
Net sensible cooling capacity	(1)(6)(7)	kW	0,76	1,16	1,56	1,72	2,19
Net latent power in cooling	(1)(6)(7)	kW	0,22	0,31	0,48	0,56	0,63
Max water flow	(1)	l/s	0,05	0,07	0,10	0,11	0,14
Pressure Drop in cooling mode	(1)	kPa	4	7	16	16	7
Total capacity (heating mode)	(2)	kW	0,74	1,10	1,49	1,67	2,23
Total Net Heating Capacity	(2)(6)	kW	0,76	1,12	1,52	1,70	2,26
Water flow in heating mode	(2)	l/s	0,02	0,03	0,04	0,04	0,05
Pressure drop in heating mode	(2)	kPa	2	5	6	7	13
Sound Pressure	(3)	dB(A)	28	37	36	37	37
Sound Power	(4)(7)	dB(A)	37	46	45	46	46
MED SPEED							
Fan Power Input	(1)	W	29,0	32,0	47,0	50,0	56,0
Air flow rate	(1)	m³/h	210	290	410	500	560
Total capacity in cooling mode	(1)	kW	1,16	1,74	2,33	2,85	3,08
Total Net Cooling Capacity	(1)(6)(7)	kW	1,13	1,71	2,28	2,80	3,03
Sensible capacity in cooling mode	(1)	kW	0,90	1,31	1,77	2,22	2,43
Net sensible cooling capacity	(1)(6)(7)	kW	0,87	1,28	1,72	2,17	2,38
Net latent power in cooling	(1)(6)(7)	kW	0,26	0,43	0,56	0,63	0,65
Max water flow	(1)	l/s	0,06	0,08	0,11	0,14	0,15
Pressure Drop in cooling mode	(1)	kPa	5	10	21	24	8
Total capacity (heating mode)	(2)	kW	0,86	1,29	1,68	2,05	2,41
Total Net Heating Capacity	(2)(6)	kW	0,89	1,32	1,73	2,10	2,47
Water flow in heating mode	(2)	l/s	0,02	0,03	0,04	0,05	0,06
Pressure drop in heating mode	(2)	kPa	3	7	7	11	15
Sound Pressure	(3)	dB(A)	31	39	37	42	39
Sound Power	(4)(7)	dB(A)	40	48	46	51	48
MAX SPEED							
Fan Power Input	(1)	W	34,0	34,0	56,0	59,0	67,0
Air flow rate	(1)	m³/h	300	360	520	590	660
Total capacity in cooling mode	(1)	kW	1,50	2,00	2,85	3,40	3,80
Total Net Cooling Capacity	(1)(6)(7)	kW	1,47	1,97	2,80	3,34	3,73
Sensible capacity in cooling mode	(1)	kW	1,23	1,59	2,22	2,61	2,94
Net sensible cooling capacity	(1)(6)(7)	kW	1,20	1,55	2,17	2,55	2,88
Net latent power in cooling	(1)(6)(7)	kW	0,27	0,41	0,63	0,79	0,86
Max water flow	(1)	l/s	0,07	0,10	0,14	0,16	0,18
Pressure Drop in cooling mode	(1)	kPa	9	13	31	34	13
Total capacity (heating mode)	(2)	kW	1,11	1,48	2,05	2,45	2,97
Total Net Heating Capacity	(2)(6)	kW	1,15	1,52	2,11	2,51	3,04
Water flow in heating mode	(2)	l/s	0,03	0,04	0,05	0,06	0,07
Pressure drop in heating mode	(2)	kPa	5	9	11	15	22
Sound Pressure	(3)	dB(A)	39	45	42	47	45
Sound Power	(4)(7)	dB(A)	48	54	51	56	54
SIZE AND WEIGHT							
A	(5)	mm	922	922	1112	1112	1302
B	(5)	mm	233	233	233	233	233
H	(5)	mm	499	499	499	499	499
Operating weight	(5)	kg	17	18	21	22	29

Notes:
1 Room temperature 27 °C d.b./19 °C w.b.; Chilled water (in/out) 7/12 °C.
2 Room temperature 20°C d.b.; Hot water (in/out) 65°C/55°C; Supplementary coil 1-row.
3 Sound pressure level in free field on a reflective surface, 1 m from fan front and 1 m from the ground. Non -binding value obtained fron sound power level.
4 Sound power on the basis of measurements made in compliance with ISO 3741 and Eurovent 8/2.
5 Unit in standard configuration/execution, without optional accessories.
6 Values in compliance with EN14511-3:2013.
7 Values in compliance with [REGULATION (EU) N. 2016/2281]

a-LIFE2 / DLMV-DFMV / DLMO-DFMO			0604	0704	0804	0904	1004
ELECTRICAL DATA							
Power supply		V/ph/Hz	230/1/50	230/1/50	230/1/50	230/1/50	230/1/50
4 PIPES SYSTEM CONFIGURATION							
ENERGY EFFICIENCY							
COOLING (EN14511 VALUE)							
FCEER	(1)(6)	kW/kW	93	70	74	61	70
FCEER Class			C	D	D	D	D
HEATING ONLY (EN14511 VALUE)							
FCCOP	(2)(6)	kW/kW	73	54	57	47	53
FCCOP Class			D	E	E	F	E
PERFORMANCE							
MIN SPEED							
Fan Power Input	(1)	W	29,0	47,0	50,0	63,0	65,0
Air flow rate	(1)	m³/h	550	640	760	790	920
Total capacity in cooling mode	(1)	kW	3,02	4,06	4,50	4,71	5,40
Total Net Cooling Capacity	(1)(6)(7)	kW	2,99	4,01	4,45	4,65	5,34
Sensible capacity in cooling mode	(1)	kW	2,39	3,00	3,44	3,59	4,14
Net sensible cooling capacity	(1)(6)(7)	kW	2,37	2,96	3,39	3,53	4,08
Net latent power in cooling	(1)(6)(7)	kW	0,63	1,06	1,06	1,12	1,26
Max water flow	(1)	l/s	0,14	0,19	0,22	0,23	0,26
Pressure Drop in cooling mode	(1)	kPa	8	15	22	19	24
Total capacity (heating mode)	(2)	kW	2,36	3,05	3,39	3,53	4,04
Total Net Heating Capacity	(2)(6)	kW	2,38	3,10	3,44	3,59	4,11
Water flow in heating mode	(2)	l/s	0,06	0,07	0,08	0,09	0,10
Pressure drop in heating mode	(2)	kPa	14	8	9	8	10
Sound Pressure	(3)	dB(A)	39	41	44	41	45
Sound Power	(4)(7)	dB(A)	48	50	53	50	54
MED SPEED							
Fan Power Input	(1)	W	47,0	83,0	86,0	113	117
Air flow rate	(1)	m³/h	670	780	910	1010	1180
Total capacity in cooling mode	(1)	kW	3,75	4,50	5,06	5,41	6,62
Total Net Cooling Capacity	(1)(6)(7)	kW	3,70	4,42	4,98	5,30	6,51
Sensible capacity in cooling mode	(1)	kW	2,94	3,49	3,99	4,16	5,16
Net sensible cooling capacity	(1)(6)(7)	kW	2,90	3,40	3,90	4,05	5,04
Net latent power in cooling	(1)(6)(7)	kW	0,81	1,02	1,07	1,25	1,46
Max water flow	(1)	l/s	0,18	0,22	0,24	0,26	0,32
Pressure Drop in cooling mode	(1)	kPa	12	18	27	26	37
Total capacity (heating mode)	(2)	kW	2,93	3,39	3,80	4,05	4,95
Total Net Heating Capacity	(2)(6)	kW	2,98	3,47	3,89	4,17	5,07
Water flow in heating mode	(2)	l/s	0,07	0,08	0,09	0,10	0,12
Pressure drop in heating mode	(2)	kPa	21	9	12	10	15
Sound Pressure	(3)	dB(A)	45	44	47	45	51
Sound Power	(4)(7)	dB(A)	54	53	56	54	60
MAX SPEED							
Fan Power Input	(1)	W	56,0	101	104	133	137
Air flow rate	(1)	m³/h	815	890	980	1140	1310
Total capacity in cooling mode	(1)	kW	4,40	5,15	5,70	6,15	7,50
Total Net Cooling Capacity	(1)(6)(7)	kW	4,35	5,05	5,60	6,02	7,37
Sensible capacity in cooling mode	(1)	kW	3,52	3,99	4,38	4,66	5,81
Net sensible cooling capacity	(1)(6)(7)	kW	3,47	3,89	4,28	4,52	5,68
Net latent power in cooling	(1)(6)(7)	kW	0,88	1,16	1,32	1,50	1,69
Max water flow	(1)	l/s	0,21	0,25	0,27	0,29	0,36
Pressure Drop in cooling mode	(1)	kPa	17	24	35	33	47
Total capacity (heating mode)	(2)	kW	3,44	3,88	4,28	4,60	5,62
Total Net Heating Capacity	(2)(6)	kW	3,50	3,98	4,39	4,74	5,75
Water flow in heating mode	(2)	l/s	0,08	0,09	0,10	0,11	0,14
Pressure drop in heating mode	(2)	kPa	28	12	15	13	19
Sound Pressure	(3)	dB(A)	50	47	50	48	55
Sound Power	(4)(7)	dB(A)	59	56	59	57	64
SIZE AND WEIGHT							
A	(5)	mm	1302	1492	1492	1682	1682
B	(5)	mm	233	233	233	233	233
H	(5)	mm	499	499	499	499	499
Operating weight	(5)	kg	30	33	35	38	40

Notes:
1 Room temperature 27 °C d.b./19 °C w.b.; Chilled water (in/out) 7/12 °C.
2 Room temperature 20°C d.b.; Hot water (in/out) 65°C/55°C; Supplementary coil 1-row.
3 Sound pressure level in free field on a reflective surface, 1 m from fan front and 1 m from the ground. Non -binding value obtained fron sound power level.
4 Sound power on the basis of measurements made in compliance with ISO 3741 and Eurovent 8/2.
5 Unit in standard configuration/execution, without optional accessories.
6 Values in compliance with EN14511-3:2013.
7 Values in compliance with [REGULATION (EU) N. 2016/2281]
Certified data in EUROVENT

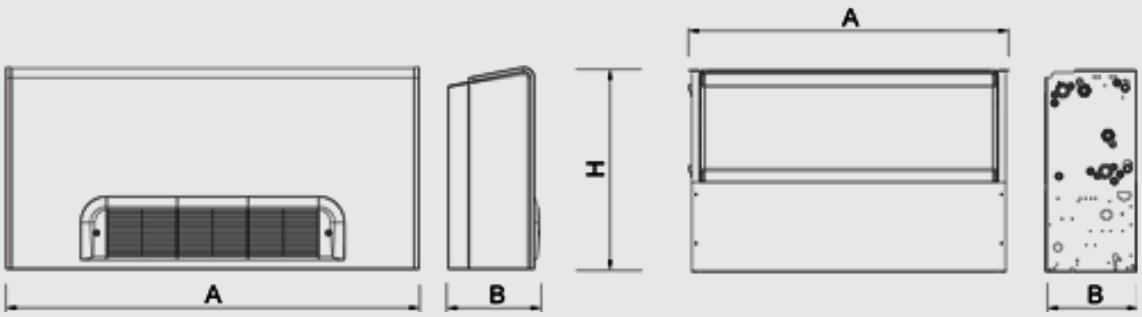
A
H
A
B
A
B

HYDRONIC TERMINALS

i-LIFE2 0202 - 1004

Professional fan-coil with cabinet or buit-in version, powered by EC Brushless Centrifugal Fan 1,82-7,50 kW



New i-LIFE2 fancoil is powered by a modulating speed centrifugal fan. This new concept of fancoil operates with continuous air flow regulation assuring the best comfort and a concrete energy savings. Thanks to the different versions, with cabinet or buit-in, low air intake or front air intake, vertical or horizontal installation, it results very easy to find the perfect solution for any requirement . A dedicated range of controllers allows a user friendly and complete regulation of all the functions, and an easy integration in home automation, centralization and Building Management Systems.

Version

DLMV	version with cabinet, low air intake, vertical installation
DLMO	version with cabinet, low air intake, horizontal installation
DFMV	version with cabinet, front air intake, vertical installation
DFMO	version with cabinet, front air intake, horizontal installation
DLIV	built-in version, low air intake, vertical installation.
DLIO	built-in version, low air intake, horizontal installation
DFIV	built-in version, front air intake, vertical installation
DFIO	built-in version, front air intake, horizontal installation

Features

High efficiency EC motor.
Modulating speed centrifugal fan and air flow regulation.
Energy consumption reduced by more than 50%
Coils with aluminium fins and copper pipes.
Configurations for 2 and 4 pipe Systems.
Left-hand water connections, easy convertible into right-hand, by simply turning the coil
Air filter on all models.
Automatically closing flap to cover and protect electric controls from dripping water (in conformity with directive 60335-2-40).
Elegant cover structure that integrates the use of high quality plastic materials, with traditional galvanized and precoated materials.
Structure in galvanised steel of high thickness for maximum resistance to rust;
Auxiliary drain pan with thermal insulation for all Horizontal versions, made of galvanized steel.
Plastic drain pan for all Vertical versions.

Accessory

- Hot water coil kit
- Kit RS485 - interface for Building Management System
- Kit control board to manage 0-10V or 3 points modulating valve unit
- i-HB Power box
- Main coil 2-way/3-way valve unit
- Additional coil 2-way/3-way valve unit
- Kit LIFE3 BOX
- Kit Gateway interface for MyHome Bticino System
- Air intake grille kit with version cover
- Straight and angular (90°) plenum kits for air outlet
- Plenum kit with round, straight or 90° air ducts.
- Straight and angular (90°) plenum kits for air inlet
- Heating element kit
- Horizontal and vertical fan coil auxiliary tray

Controls

EK plug-in control /EKW wall mounted control

User interface for selection of functioning mode (OFF/summer/winter/AUTO), fan speed (Max/Med/Min/AUTO), temperature set. Control of main and additional coil valve unit (summer/winter - 2 and 4 pipes installation) . Management of traditional ON/OFF valve unit or modulating valve unit 0-10V or 3 points . Air and water temperature probe. Multifunction digital input configurable by user. Configuration dip switch.
Modbus protocol for installation in BMS (e.g. Idrorelax system by Climaveneta). Installation and management of Master-Slave system up to 8 LIFE fan coil units.
Easy control installation thanks to 2 wires connection.

iK control with LCD screen

Interface with LCD screen with user-friendly icons. Control kit for universal installation: wall-mounted as well as plug-in. Selection of functioning mode (OFF/summer/winter/AUTO), fan speed (Max/Med/Min/AUTO), temperature set. Control iK could function manually or with weekly timer regulation configurable by the customer.
Control of main coil valve unit (summer/winter - 2 pipes) and additional coil (winter - 4 pipes). Management of traditional ON/OFF valve unit or modulating valve unit 0-10V or 3 points (supply 230 VAC or 24V) .
Parameters configurable directly by user. Modbus protocol for installation in Building Management System (e.g. Idrorelax system by Climaveneta). Installation and management of Master-Slave system up to 8 LIFE2 fan coil units.
Easy control installation thanks to 2 wires connection through HB power board

Remote control

In combination with (i)HB powerboard on board of the units, it's possible to have Set-point regulation, selection of functioning mode (cool, heat, dehumidify, fan), and fan speed (Max, Med, Min, AUTO). User-sfriendly compact remote control with fine aethetics.

AT-EC plug-in control/ATW-EC wall mounted control

User interface for selection of functioning mode (Off/Summer/Winter/Auto), fan speed (Max,Med,Min,Auto), and temperature set. Control of main and additional coil valve unit. (summer/winter 2 and 4 pipes installation). Managment of traditional ON/OFF valve unit. Air and water temperature probe. Multifuncion digital input configurable by user. Configuration dip switch. The controls can not be connected to BMS system.

i-LIFE2 / DLIV-DFIV			0202	0402	0602	0802	1002
ELECTRICAL DATA							
Power supply		V/ph/Hz	230/1/50	230/1/50	230/1/50	230/1/50	230/1/50
2 PIPES SYSTEM CONFIGURATION							
ENERGY EFFICIENCY							
COOLING (EN14511 VALUE)							
FCEER	(1)(6)	kW/kW	125	122	124	120	136
FCEER Class			B	B	B	B	B
HEATING ONLY (EN14511 VALUE)							
FCCOP	(2)(6)	kW/kW	174	162	173	165	183
FCCOP Class			B	B	B	B	B
PERFORMANCE							
MIN SPEED							
Fan Power Input	(1)	W	7,00	7,86	6,95	7,57	10,9
Air flow rate	(1)	m³/h	176	241	289	318	536
Total capacity in cooling mode	(1)	kW	1,00	1,50	1,95	2,34	3,23
Total Net Cooling Capacity	(1)(6)(7)	kW	0,99	1,49	1,95	2,34	3,22
Sensible capacity in cooling mode	(1)	kW	0,79	1,16	1,31	1,83	2,43
Net sensible cooling capacity	(1)(6)(7)	kW	0,78	1,16	1,30	1,82	2,42
Net latent power in cooling	(1)(6)(7)	kW	0,21	0,34	0,64	0,52	0,80
Max water flow	(1)	l/s	0,05	0,07	0,09	0,11	0,15
Pressure Drop in cooling mode	(1)	kPa	3	7	3	6	9
Total capacity (heating mode)	(2)	kW	1,18	1,68	2,28	2,70	3,61
Total Net Heating Capacity	(2)(6)	kW	1,19	1,69	2,29	2,71	3,62
Water flow in heating mode	(2)	l/s	0,06	0,08	0,11	0,13	0,17
Pressure drop in heating mode	(2)	kPa	4	9	4	6	11
Sound Pressure	(3)	dB(A)	30	33	33	34	37
Sound Power	(4)(7)	dB(A)	40	42	42	43	46
MED SPEED							
Fan Power Input	(1)	W	10,9	15,4	15,0	24,1	30,2
Air flow rate	(1)	m³/h	262	377	548	756	917
Total capacity in cooling mode	(1)	kW	1,45	2,29	3,01	4,48	5,38
Total Net Cooling Capacity	(1)(6)(7)	kW	1,44	2,28	3,00	4,46	5,36
Sensible capacity in cooling mode	(1)	kW	1,15	1,74	2,08	3,32	4,13
Net sensible cooling capacity	(1)(6)(7)	kW	1,13	1,72	2,07	3,30	4,10
Net latent power in cooling	(1)(6)(7)	kW	0,30	0,56	0,93	1,16	1,26
Max water flow	(1)	l/s	0,07	0,11	0,14	0,21	0,26
Pressure Drop in cooling mode	(1)	kPa	7	16	8	21	24
Total capacity (heating mode)	(2)	kW	1,72	2,57	3,51	5,16	6,00
Total Net Heating Capacity	(2)(6)	kW	1,73	2,59	3,52	5,19	6,03
Water flow in heating mode	(2)	l/s	0,08	0,12	0,17	0,25	0,29
Pressure drop in heating mode	(2)	kPa	8	21	10	20	28
Sound Pressure	(3)	dB(A)	38	42	44	45	46
Sound Power	(4)(7)	dB(A)	47	51	53	54	56
MAX SPEED							
Fan Power Input	(1)	W	19,8	42,9	36,0	45,3	76,5
Air flow rate	(1)	m³/h	363	585	808	976	1351
Total capacity in cooling mode	(1)	kW	2,00	3,38	4,36	5,68	7,50
Total Net Cooling Capacity	(1)(6)(7)	kW	1,98	3,34	4,33	5,63	7,43
Sensible capacity in cooling mode	(1)	kW	1,59	2,59	3,05	4,11	5,81
Net sensible cooling capacity	(1)(6)(7)	kW	1,57	2,55	3,01	4,07	5,74
Net latent power in cooling	(1)(6)(7)	kW	0,41	0,78	1,32	1,56	1,69
Max water flow	(1)	l/s	0,10	0,16	0,21	0,27	0,36
Pressure Drop in cooling mode	(1)	kPa	13	34	17	34	47
Total capacity (heating mode)	(2)	kW	2,40	3,68	5,09	6,53	8,51
Total Net Heating Capacity	(2)(6)	kW	2,42	3,73	5,13	6,57	8,59
Water flow in heating mode	(2)	l/s	0,12	0,18	0,25	0,32	0,41
Pressure drop in heating mode	(2)	kPa	16	41	20	31	53
Sound Pressure	(3)	dB(A)	48	51	53	54	56
Sound Power	(4)(7)	dB(A)	57	60	62	63	65
SIZE AND WEIGHT							
A	(5)	mm	450	650	850	1050	1250
B	(5)	mm	215	215	215	215	215
H	(5)	mm	450	450	450	450	450
Operating weight	(5)	kg	11	14	21	24	28

Notes:
1 Room temperature 27 °C d.b./19 °C w.b.; Chilled water (in/out) 7/12 °C.
2 Room temperature 20 °C d.b.; Hot water (in/out) 45/40 °C
3 Sound pressure level in free field on a reflective surface, 1 m from fan front and 1 m from the ground. Non -binding value obtained fron sound power level.
4 Sound power on the basis of measurements made in compliance with ISO 3741 and Eurovent 8/2.
5 Unit in standard configuration/execution, without optional accessories.
6 Values in compliance with EN14511-3:2013.
7 Values in compliance with [REGULATION (EU) N. 2016/2281]
Certified data in EUROVENT

i-LIFE2 / DLIO-DFIO			0202	0402	0602	0802	1002
ELECTRICAL DATA							
Power supply		V/ph/Hz	230/1/50	230/1/50	230/1/50	230/1/50	230/1/50
2 PIPES SYSTEM CONFIGURATION							
ENERGY EFFICIENCY							
COOLING (EN14511 VALUE)							
FCEER	(1)(6)	kW/kW	125	122	124	120	136
FCEER Class			B	B	B	B	B
HEATING ONLY (EN14511 VALUE)							
FCCOP	(2)(6)	kW/kW	174	162	173	165	183
FCCOP Class			B	B	B	B	B
PERFORMANCE							
MIN SPEED							
Fan Power Input	(1)	W	7,00	7,86	6,95	7,57	10,9
Air flow rate	(1)	m³/h	176	241	289	318	536
Total capacity in cooling mode	(1)	kW	1,00	1,50	1,95	2,34	3,23
Total Net Cooling Capacity	(1)(6)(7)	kW	0,99	1,49	1,95	2,34	3,22
Sensible capacity in cooling mode	(1)	kW	0,79	1,16	1,31	1,83	2,43
Net sensible cooling capacity	(1)(6)(7)	kW	0,78	1,16	1,30	1,82	2,42
Net latent power in cooling	(1)(6)(7)	kW	0,21	0,34	0,64	0,52	0,80
Max water flow	(1)	l/s	0,05	0,07	0,09	0,11	0,15
Pressure Drop in cooling mode	(1)	kPa	3	7	3	6	9
Total capacity (heating mode)	(2)	kW	1,18	1,68	2,28	2,70	3,61
Total Net Heating Capacity	(2)(6)	kW	1,19	1,69	2,29	2,71	3,62
Water flow in heating mode	(2)	l/s	0,06	0,08	0,11	0,13	0,17
Pressure drop in heating mode	(2)	kPa	4	9	4	6	11
Sound Pressure	(3)	dB(A)	30	33	33	34	37
Sound Power	(4)(7)	dB(A)	40	42	42	43	46
MED SPEED							
Fan Power Input	(1)	W	10,9	15,4	15,0	24,1	30,2
Air flow rate	(1)	m³/h	262	377	548	756	917
Total capacity in cooling mode	(1)	kW	1,45	2,29	3,01	4,48	5,38
Total Net Cooling Capacity	(1)(6)(7)	kW	1,44	2,28	3,00	4,46	5,36
Sensible capacity in cooling mode	(1)	kW	1,15	1,74	2,08	3,32	4,13
Net sensible cooling capacity	(1)(6)(7)	kW	1,13	1,72	2,07	3,30	4,10
Net latent power in cooling	(1)(6)(7)	kW	0,30	0,56	0,93	1,16	1,26
Max water flow	(1)	l/s	0,07	0,11	0,14	0,21	0,26
Pressure Drop in cooling mode	(1)	kPa	7	16	8	21	24
Total capacity (heating mode)	(2)	kW	1,72	2,57	3,51	5,16	6,00
Total Net Heating Capacity	(2)(6)	kW	1,73	2,59	3,52	5,19	6,03
Water flow in heating mode	(2)	l/s	0,08	0,12	0,17	0,25	0,29
Pressure drop in heating mode	(2)	kPa	8	21	10	20	28
Sound Pressure	(3)	dB(A)	38	42	44	45	46
Sound Power	(4)(7)	dB(A)	47	51	53	54	56
MAX SPEED							
Fan Power Input	(1)	W	19,8	42,9	36,0	45,3	76,5
Air flow rate	(1)	m³/h	363	585	808	976	1351
Total capacity in cooling mode	(1)	kW	2,00	3,38	4,36	5,68	7,50
Total Net Cooling Capacity	(1)(6)(7)	kW	1,98	3,34	4,33	5,63	7,43
Sensible capacity in cooling mode	(1)	kW	1,59	2,59	3,05	4,11	5,81
Net sensible cooling capacity	(1)(6)(7)	kW	1,57	2,55	3,01	4,07	5,74
Net latent power in cooling	(1)(6)(7)	kW	0,41	0,78	1,32	1,56	1,69
Max water flow	(1)	l/s	0,10	0,16	0,21	0,27	0,36
Pressure Drop in cooling mode	(1)	kPa	13	34	17	34	47
Total capacity (heating mode)	(2)	kW	2,40	3,68	5,09	6,53	8,51
Total Net Heating Capacity	(2)(6)	kW	2,42	3,73	5,13	6,57	8,59
Water flow in heating mode	(2)	l/s	0,12	0,18	0,25	0,32	0,41
Pressure drop in heating mode	(2)	kPa	16	41	20	31	53
Sound Pressure	(3)	dB(A)	48	51	53	54	56
Sound Power	(4)(7)	dB(A)	57	60	62	63	65
SIZE AND WEIGHT							
A	(5)	mm	545	745	945	1145	1345
B	(5)	mm	215	215	215	215	215
H	(5)	mm	450	450	450	450	450
Operating weight	(5)	kg	12	15	21	25	29

Notes:
1 Room temperature 27 °C d.b./19 °C w.b.; Chilled water (in/out) 7/12 °C.
2 Room temperature 20 °C d.b.; Hot water (in/out) 45/40 °C
3 Sound pressure level in free field on a reflective surface, 1 m from fan front and 1 m from the ground. Non -binding value obtained fron sound power level.
4 Sound power on the basis of measurements made in compliance with ISO 3741 and Eurovent 8/2.
5 Unit in standard configuration/execution, without optional accessories.
6 Values in compliance with EN14511-3:2013.
7 Values in compliance with [REGULATION (EU) N. 2016/2281]
Certified data in EUROVENT

i-LIFE2 / DLMV-DFMV / DLMO-DFMO			0202	0402	0602	0802	1002
ELECTRICAL DATA							
Power supply		V/ph/Hz	230/1/50	230/1/50	230/1/50	230/1/50	230/1/50
2 PIPES SYSTEM CONFIGURATION							
ENERGY EFFICIENCY							
COOLING (EN14511 VALUE)							
FCEER	(1)(6)	kW/kW	125	122	124	120	136
FCEER Class			B	B	B	B	B
HEATING ONLY (EN14511 VALUE)							
FCCOP	(2)(6)	kW/kW	174	162	173	165	183
FCCOP Class			B	B	B	B	B
PERFORMANCE							
MIN SPEED							
Fan Power Input	(1)	W	7,00	7,86	6,95	7,57	10,9
Air flow rate	(1)	m³/h	176	241	289	318	536
Total capacity in cooling mode	(1)	kW	1,00	1,50	1,95	2,34	3,23
Total Net Cooling Capacity	(1)(6)(7)	kW	0,99	1,49	1,95	2,34	3,22
Sensible capacity in cooling mode	(1)	kW	0,79	1,16	1,31	1,83	2,43
Net sensible cooling capacity	(1)(6)(7)	kW	0,78	1,16	1,30	1,82	2,42
Net latent power in cooling	(1)(6)(7)	kW	0,21	0,34	0,64	0,52	0,80
Max water flow	(1)	l/s	0,05	0,07	0,09	0,11	0,15
Pressure Drop in cooling mode	(1)	kPa	3	7	3	6	9
Total capacity (heating mode)	(2)	kW	1,18	1,68	2,28	2,70	3,61
Total Net Heating Capacity	(2)(6)	kW	1,19	1,69	2,29	2,71	3,62
Water flow in heating mode	(2)	l/s	0,06	0,08	0,11	0,13	0,17
Pressure drop in heating mode	(2)	kPa	4	9	4	6	11
Sound Pressure	(3)	dB(A)	30	33	33	34	37
Sound Power	(4)(7)	dB(A)	40	42	42	43	46
MED SPEED							
Fan Power Input	(1)	W	10,9	15,4	15,0	24,1	30,2
Air flow rate	(1)	m³/h	262	377	548	756	917
Total capacity in cooling mode	(1)	kW	1,45	2,29	3,01	4,48	5,38
Total Net Cooling Capacity	(1)(6)(7)	kW	1,44	2,28	3,00	4,46	5,36
Sensible capacity in cooling mode	(1)	kW	1,15	1,74	2,08	3,32	4,13
Net sensible cooling capacity	(1)(6)(7)	kW	1,13	1,72	2,07	3,30	4,10
Net latent power in cooling	(1)(6)(7)	kW	0,30	0,56	0,93	1,16	1,26
Max water flow	(1)	l/s	0,07	0,11	0,14	0,21	0,26
Pressure Drop in cooling mode	(1)	kPa	7	16	8	21	24
Total capacity (heating mode)	(2)	kW	1,72	2,57	3,51	5,16	6,00
Total Net Heating Capacity	(2)(6)	kW	1,73	2,59	3,52	5,19	6,03
Water flow in heating mode	(2)	l/s	0,08	0,12	0,17	0,25	0,29
Pressure drop in heating mode	(2)	kPa	8	21	10	20	28
Sound Pressure	(3)	dB(A)	38	42	44	45	46
Sound Power	(4)(7)	dB(A)	47	51	53	54	56
MAX SPEED							
Fan Power Input	(1)	W	19,8	42,9	36,0	45,3	76,5
Air flow rate	(1)	m³/h	363	585	808	976	1351
Total capacity in cooling mode	(1)	kW	2,00	3,38	4,36	5,68	7,50
Total Net Cooling Capacity	(1)(6)(7)	kW	1,98	3,34	4,33	5,63	7,43
Sensible capacity in cooling mode	(1)	kW	1,59	2,59	3,05	4,11	5,81
Net sensible cooling capacity	(1)(6)(7)	kW	1,57	2,55	3,01	4,07	5,74
Net latent power in cooling	(1)(6)(7)	kW	0,41	0,78	1,32	1,56	1,69
Max water flow	(1)	l/s	0,10	0,16	0,21	0,27	0,36
Pressure Drop in cooling mode	(1)	kPa	13	34	17	34	47
Total capacity (heating mode)	(2)	kW	2,40	3,68	5,09	6,53	8,51
Total Net Heating Capacity	(2)(6)	kW	2,42	3,73	5,13	6,57	8,59
Water flow in heating mode	(2)	l/s	0,12	0,18	0,25	0,32	0,41
Pressure drop in heating mode	(2)	kPa	16	41	20	31	53
Sound Pressure	(3)	dB(A)	48	51	53	54	56
Sound Power	(4)(7)	dB(A)	57	60	62	63	65
SIZE AND WEIGHT							
A	(5)	mm	922	1112	1302	1492	1682
B	(5)	mm	233	233	233	233	233
H	(5)	mm	499	499	499	499	499
Operating weight	(5)	kg	14	17	24	28	32

Notes:
1 Room temperature 27 °C d.b./19 °C w.b.; Chilled water (in/out) 7/12 °C.
2 Room temperature 20 °C d.b.; Hot water (in/out) 45/40 °C
3 Sound pressure level in free field on a reflective surface, 1 m from fan front and 1 m from the ground. Non -binding value obtained fron sound power level.
4 Sound power on the basis of measurements made in compliance with ISO 3741 and Eurovent 8/2.
5 Unit in standard configuration/execution, without optional accessories.
6 Values in compliance with EN14511-3:2013.
7 Values in compliance with [REGULATION (EU) N. 2016/2281]
Certified data in EUROVENT

i-LIFE2 / DLIV-DFIV			0204	0404	0604	0804	1004
ELECTRICAL DATA							
Power supply		V/ph/Hz	230/1/50	230/1/50	230/1/50	230/1/50	230/1/50
4 PIPES SYSTEM CONFIGURATION							
ENERGY EFFICIENCY							
COOLING (EN14511 VALUE)							
FCEER	(1)(6)	kW/kW	125	122	124	120	136
FCEER Class			B	B	B	B	B
HEATING ONLY (EN14511 VALUE)							
FCCOP	(2)(6)	kW/kW	104	99	110	103	116
FCCOP Class			C	D	C	C	C
PERFORMANCE							
MIN SPEED							
Fan Power Input	(1)	W	7,00	7,86	6,95	7,57	14,2
Air flow rate	(1)	m³/h	176	241	289	318	536
Total capacity in cooling mode	(1)	kW	0,93	1,50	1,95	2,25	3,23
Total Net Cooling Capacity	(1)(6)(7)	kW	0,92	1,49	1,95	2,24	3,22
Sensible capacity in cooling mode	(1)	kW	0,73	1,16	1,50	1,69	2,43
Net sensible cooling capacity	(1)(6)(7)	kW	0,72	1,16	1,49	1,69	2,42
Net latent power in cooling	(1)(6)(7)	kW	0,20	0,34	0,45	0,56	0,80
Max water flow	(1)	l/s	0,04	0,07	0,09	0,11	0,15
Pressure Drop in cooling mode	(1)	kPa	3	7	3	5	9
Total capacity (heating mode)	(2)	kW	0,74	1,08	1,53	1,77	2,42
Total Net Heating Capacity	(2)(6)	kW	0,75	1,09	1,54	1,77	2,43
Water flow in heating mode	(2)	l/s	0,02	0,03	0,04	0,04	0,06
Pressure drop in heating mode	(2)	kPa	2	3	6	3	13
Sound Pressure	(3)	dB(A)	30	33	33	34	37
Sound Power	(4)(7)	dB(A)	40	42	42	43	46
MED SPEED							
Fan Power Input	(1)	W	10,9	15,4	15,0	24,1	43,0
Air flow rate	(1)	m³/h	262	377	548	756	917
Total capacity in cooling mode	(1)	kW	1,35	2,29	3,01	4,30	5,38
Total Net Cooling Capacity	(1)(6)(7)	kW	1,34	2,28	3,00	4,28	5,34
Sensible capacity in cooling mode	(1)	kW	1,06	1,74	2,39	3,17	4,13
Net sensible cooling capacity	(1)(6)(7)	kW	1,05	1,72	2,37	3,15	4,09
Net latent power in cooling	(1)(6)(7)	kW	0,29	0,56	0,63	1,13	1,26
Max water flow	(1)	l/s	0,06	0,11	0,14	0,21	0,26
Pressure Drop in cooling mode	(1)	kPa	6	16	8	20	24
Total capacity (heating mode)	(2)	kW	1,07	1,66	2,35	3,37	4,03
Total Net Heating Capacity	(2)(6)	kW	1,08	1,67	2,36	3,40	4,07
Water flow in heating mode	(2)	l/s	0,03	0,04	0,06	0,08	0,10
Pressure drop in heating mode	(2)	kPa	5	7	14	9	34
Sound Pressure	(3)	dB(A)	38	42	44	45	46
Sound Power	(4)(7)	dB(A)	47	51	53	54	56
MAX SPEED							
Fan Power Input	(1)	W	19,8	42,9	36,0	45,3	112
Air flow rate	(1)	m³/h	363	585	808	976	1352
Total capacity in cooling mode	(1)	kW	1,82	3,38	4,36	5,45	7,50
Total Net Cooling Capacity	(1)(6)(7)	kW	1,80	3,34	4,33	5,41	7,39
Sensible capacity in cooling mode	(1)	kW	1,44	2,59	3,49	4,04	5,81
Net sensible cooling capacity	(1)(6)(7)	kW	1,42	2,55	3,46	3,99	5,70
Net latent power in cooling	(1)(6)(7)	kW	0,38	0,78	0,87	1,41	1,69
Max water flow	(1)	l/s	0,09	0,16	0,21	0,26	0,36
Pressure Drop in cooling mode	(1)	kPa	10	34	17	32	47
Total capacity (heating mode)	(2)	kW	1,48	2,44	3,41	4,27	5,62
Total Net Heating Capacity	(2)(6)	kW	1,50	2,48	3,45	4,31	5,73
Water flow in heating mode	(2)	l/s	0,04	0,06	0,08	0,10	0,14
Pressure drop in heating mode	(2)	kPa	9	15	28	14	63
Sound Pressure	(3)	dB(A)	48	51	53	54	56
Sound Power	(4)(7)	dB(A)	57	60	62	63	65
SIZE AND WEIGHT							
A	(5)	mm	450	650	850	1050	1250
B	(5)	mm	215	215	215	215	215
H	(5)	mm	450	450	450	450	450
Operating weight	(5)	kg	12	15	22	26	30

Notes:
1 Room temperature 27°C d.b./18,9°C w.b., Chilled water (in/out) 7°C/12°C.
2 Room temperature 20 °C d.b., hot water (in/out) 65/55 °C
3 Sound pressure level in free field on a reflective surface, 1 m from fan front and 1 m from the ground. Non -binding value obtained fron sound power level.
4 Sound power on the basis of measurements made in compliance with ISO 3741 and Eurovent 8/2.
5 Unit in standard configuration/execution, without optional accessories.
6 Values in compliance with EN14511-3:2013.
7 Values in compliance with [REGULATION (EU) N. 2016/2281]
Certified data in EUROVENT

i-LIFE2 / DLIO-DFIO			0204	0404	0604	0804	1004
ELECTRICAL DATA							
Power supply		V/ph/Hz	230/1/50	230/1/50	230/1/50	230/1/50	230/1/50
4 PIPES SYSTEM CONFIGURATION							
ENERGY EFFICIENCY							
COOLING (EN14511 VALUE)							
FCEER	(1)(6)	kW/kW	125	122	124	120	136
FCEER Class			B	B	B	B	B
HEATING ONLY (EN14511 VALUE)							
FCCOP	(2)(6)	kW/kW	104	99	110	103	116
FCCOP Class			C	D	C	C	C
PERFORMANCE							
MIN SPEED							
Fan Power Input	(1)	W	7,00	7,86	6,95	7,57	14,2
Air flow rate	(1)	m³/h	176	241	289	318	536
Total capacity in cooling mode	(1)	kW	0,93	1,50	1,95	2,25	3,23
Total Net Cooling Capacity	(1)(6)(7)	kW	0,92	1,49	1,95	2,24	3,22
Sensible capacity in cooling mode	(1)	kW	0,73	1,16	1,50	1,69	2,43
Net sensible cooling capacity	(1)(6)(7)	kW	0,72	1,16	1,49	1,69	2,42
Net latent power in cooling	(1)(6)(7)	kW	0,20	0,34	0,45	0,56	0,80
Max water flow	(1)	l/s	0,04	0,07	0,09	0,11	0,15
Pressure Drop in cooling mode	(1)	kPa	3	7	3	5	9
Total capacity (heating mode)	(2)	kW	0,74	1,08	1,53	1,77	2,42
Total Net Heating Capacity	(2)(6)	kW	0,75	1,09	1,54	1,77	2,43
Water flow in heating mode	(2)	l/s	0,02	0,03	0,04	0,04	0,06
Pressure drop in heating mode	(2)	kPa	2	3	6	3	13
Sound Pressure	(3)	dB(A)	30	33	33	34	37
Sound Power	(4)(7)	dB(A)	40	42	42	43	46
MED SPEED							
Fan Power Input	(1)	W	10,9	15,4	15,0	24,1	43,0
Air flow rate	(1)	m³/h	262	377	548	756	917
Total capacity in cooling mode	(1)	kW	1,35	2,29	3,01	4,30	5,38
Total Net Cooling Capacity	(1)(6)(7)	kW	1,34	2,28	3,00	4,28	5,34
Sensible capacity in cooling mode	(1)	kW	1,06	1,74	2,39	3,17	4,13
Net sensible cooling capacity	(1)(6)(7)	kW	1,05	1,72	2,37	3,15	4,09
Net latent power in cooling	(1)(6)(7)	kW	0,29	0,56	0,63	1,13	1,26
Max water flow	(1)	l/s	0,06	0,11	0,14	0,21	0,26
Pressure Drop in cooling mode	(1)	kPa	6	16	8	20	24
Total capacity (heating mode)	(2)	kW	1,07	1,66	2,35	3,37	4,03
Total Net Heating Capacity	(2)(6)	kW	1,08	1,67	2,36	3,40	4,07
Water flow in heating mode	(2)	l/s	0,03	0,04	0,06	0,08	0,10
Pressure drop in heating mode	(2)	kPa	5	7	14	9	34
Sound Pressure	(3)	dB(A)	38	42	44	45	46
Sound Power	(4)(7)	dB(A)	47	51	53	54	56
MAX SPEED							
Fan Power Input	(1)	W	19,8	42,9	36,0	45,3	112
Air flow rate	(1)	m³/h	363	585	808	976	1352
Total capacity in cooling mode	(1)	kW	1,82	3,38	4,36	5,45	7,50
Total Net Cooling Capacity	(1)(6)(7)	kW	1,80	3,34	4,33	5,41	7,39
Sensible capacity in cooling mode	(1)	kW	1,44	2,59	3,49	4,04	5,81
Net sensible cooling capacity	(1)(6)(7)	kW	1,42	2,55	3,46	3,99	5,70
Net latent power in cooling	(1)(6)(7)	kW	0,38	0,78	0,87	1,41	1,69
Max water flow	(1)	l/s	0,09	0,16	0,21	0,26	0,36
Pressure Drop in cooling mode	(1)	kPa	10	34	17	32	47
Total capacity (heating mode)	(2)	kW	1,48	2,44	3,41	4,27	5,62
Total Net Heating Capacity	(2)(6)	kW	1,50	2,48	3,45	4,31	5,73
Water flow in heating mode	(2)	l/s	0,04	0,06	0,08	0,10	0,14
Pressure drop in heating mode	(2)	kPa	9	15	28	14	63
Sound Pressure	(3)	dB(A)	48	51	53	54	56
Sound Power	(4)(7)	dB(A)	57	60	62	63	65
SIZE AND WEIGHT							
A	(5)	mm	545	745	945	1145	1345
B	(5)	mm	215	215	215	215	215
H	(5)	mm	450	450	450	450	450
Operating weight	(5)	kg	12	16	22	26	30

Notes:
1 Room temperature 27°C d.b./18,9°C w.b., Chilled water (in/out) 7°C/12°C.
2 Room temperature 20 °C d.b., hot water (in/out) 65/55 °C
3 Sound pressure level in free field on a reflective surface, 1 m from fan front and 1 m from the ground. Non -binding value obtained fron sound power level.
4 Sound power on the basis of measurements made in compliance with ISO 3741 and Eurovent 8/2.
5 Unit in standard configuration/execution, without optional accessories.
6 Values in compliance with EN14511-3:2013.
7 Values in compliance with [REGULATION (EU) N. 2016/2281]
Certified data in EUROVENT

i-LIFE2 / DLMV-DFMV / DLMO-DFMO			0204	0404	0604	0804	1004
ELECTRICAL DATA							
Power supply		V/ph/Hz	230/1/50	230/1/50	230/1/50	230/1/50	230/1/50
4 PIPES SYSTEM CONFIGURATION							
ENERGY EFFICIENCY							
COOLING (EN14511 VALUE)							
FCEER	(1)(6)	kW/kW	125	122	124	120	136
FCEER Class			B	B	B	B	B
HEATING ONLY (EN14511 VALUE)							
FCCOP	(2)(6)	kW/kW	104	99	110	103	116
FCCOP Class			C	D	C	C	C
PERFORMANCE							
MIN SPEED							
Fan Power Input	(1)	W	7,00	7,86	6,95	7,57	14,2
Air flow rate	(1)	m³/h	176	241	289	318	536
Total capacity in cooling mode	(1)	kW	0,93	1,50	1,95	2,23	3,23
Total Net Cooling Capacity	(1)(6)(7)	kW	0,92	1,49	1,95	2,22	3,22
Sensible capacity in cooling mode	(1)	kW	0,73	1,16	1,50	1,69	2,43
Net sensible cooling capacity	(1)(6)(7)	kW	0,72	1,16	1,49	1,69	2,42
Net latent power in cooling	(1)(6)(7)	kW	0,20	0,34	0,45	0,53	0,80
Max water flow	(1)	l/s	0,04	0,07	0,09	0,11	0,15
Pressure Drop in cooling mode	(1)	kPa	3	7	3	5	9
Total capacity (heating mode)	(2)	kW	0,74	1,08	1,53	1,77	2,42
Total Net Heating Capacity	(2)(6)	kW	0,75	1,09	1,54	1,77	2,43
Water flow in heating mode	(2)	l/s	0,02	0,03	0,04	0,04	0,06
Pressure drop in heating mode	(2)	kPa	2	3	6	3	13
Sound Pressure	(3)	dB(A)	30	33	33	34	37
Sound Power	(4)(7)	dB(A)	40	42	42	43	46
MED SPEED							
Fan Power Input	(1)	W	10,9	15,4	15,0	24,1	43,0
Air flow rate	(1)	m³/h	262	377	548	756	917
Total capacity in cooling mode	(1)	kW	1,35	2,29	3,01	4,25	5,38
Total Net Cooling Capacity	(1)(6)(7)	kW	1,34	2,28	3,00	4,23	5,34
Sensible capacity in cooling mode	(1)	kW	1,06	1,74	2,39	3,17	4,13
Net sensible cooling capacity	(1)(6)(7)	kW	1,05	1,72	2,37	3,15	4,09
Net latent power in cooling	(1)(6)(7)	kW	0,29	0,56	0,63	1,09	1,26
Max water flow	(1)	l/s	0,06	0,11	0,14	0,20	0,26
Pressure Drop in cooling mode	(1)	kPa	6	16	8	19	24
Total capacity (heating mode)	(2)	kW	1,07	1,66	2,35	3,37	4,03
Total Net Heating Capacity	(2)(6)	kW	1,08	1,67	2,36	3,40	4,07
Water flow in heating mode	(2)	l/s	0,03	0,04	0,06	0,08	0,10
Pressure drop in heating mode	(2)	kPa	5	7	14	9	34
Sound Pressure	(3)	dB(A)	38	42	44	45	46
Sound Power	(4)(7)	dB(A)	47	51	53	54	56
MAX SPEED							
Fan Power Input	(1)	W	19,8	42,9	36,0	45,3	112
Air flow rate	(1)	m³/h	363	585	808	976	1352
Total capacity in cooling mode	(1)	kW	1,82	3,38	4,36	5,39	7,50
Total Net Cooling Capacity	(1)(6)(7)	kW	1,80	3,34	4,33	5,35	7,39
Sensible capacity in cooling mode	(1)	kW	1,44	2,59	3,49	4,04	5,81
Net sensible cooling capacity	(1)(6)(7)	kW	1,42	2,55	3,46	3,99	5,70
Net latent power in cooling	(1)(6)(7)	kW	0,38	0,78	0,87	1,36	1,69
Max water flow	(1)	l/s	0,09	0,16	0,21	0,26	0,36
Pressure Drop in cooling mode	(1)	kPa	10	34	17	31	47
Total capacity (heating mode)	(2)	kW	1,48	2,44	3,41	4,27	5,62
Total Net Heating Capacity	(2)(6)	kW	1,50	2,48	3,45	4,31	5,73
Water flow in heating mode	(2)	l/s	0,04	0,06	0,08	0,10	0,14
Pressure drop in heating mode	(2)	kPa	9	15	28	14	63
Sound Pressure	(3)	dB(A)	48	51	53	54	56
Sound Power	(4)(7)	dB(A)	57	60	62	63	65
SIZE AND WEIGHT							
A	(5)	mm	922	1112	1302	1492	1682
B	(5)	mm	233	233	233	233	233
H	(5)	mm	499	499	499	499	499
Operating weight	(5)	kg	15	18	25	29	33

Notes:
1 Room temperature 27 °C d.b./19 °C w.b.; Chilled water (in/out) 7/12 °C.
2 Room temperature 20°C d.b.; Hot water (in/out) 65°C/55°C; Supplementary coil 1-row.
3 Sound pressure level in free field on a reflective surface, 1 m from fan front and 1 m from the ground. Non -binding value obtained fron sound power level.
4 Sound power on the basis of measurements made in compliance with ISO 3741 and Eurovent 8/2.
5 Unit in standard configuration/execution, without optional accessories.
6 Values in compliance with EN14511-3:2013.
7 Values in compliance with [REGULATION (EU) N. 2016/2281]
Certified data in EUROVENT

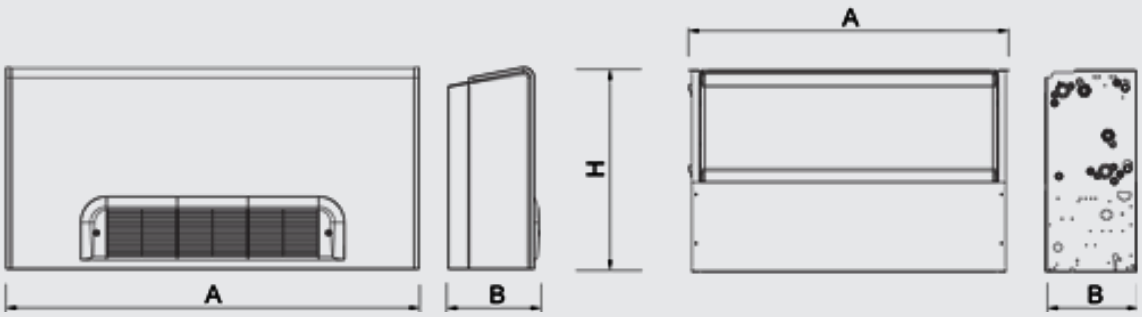
A
H
A
B
A
B

HYDRONIC TERMINALS

a-LIFE2 HP 0302 - 1204

High head fan-coil for professional application built-in version 2,88-8,60 kW



a-LIFE2 HP are professional high-head fan coils by Climaveneta. The enhanced motor and the built-in version make these units ideal for ducted systems in tertiary and commercial sectors.

Version

DFIO	built-in version, front air intake, horizontal installation
DFIV	built-in version, front air intake, vertical installation
DLIO	built-in version, low air intake, horizontal installation
DLIV	built-in version, low air intake, vertical installation.

Features

High pressure centrifugal fan unit for ducted system;
Multi speed directly coupled electric motor;
Configurations for 2 and 4 pipe Systems.
Structure in hot galvanised steel for maximum resistance to rust;
Left-hand water connections, easy convertible into right-hand, by simply turning the coil
Air filter on all models.
Auxiliary drain pan with thermal insulation for all Horizontal versions, made of galvanized steel.
Plastic drain pan for all Vertical versions.

Accessory

- Hot water coil kit
- Main coil 2-way/3-way valve unit
- Main and additional coil valve unit ON/OFF, PWM, 0-10 V, 3 points 2-way or 3-way
- Kit control board to manage 0-10V or 3 points modulating valve unit
- Kit RS485 - interface for Building Management System
- Kit Bus Adapter for BMS
- Kit Gateway interface for MyHome Bticino System
- Interface SPB Kit
- Heating element kit
- Condensate drain pump
- Horizontal and vertical fan coil auxiliary tray
- Hose kit
- Straight and angular (90°) plenum kits for air inlet
- Plenum kit with round, straight or 90° air ducts.

Controls

ATW wall mounted

Mode button (OFF/summer/winter/AUTO), fan speed button (Max/Med/Min/AUTO). Thermostat with set point regulation. ON/OFF valve unit control (summer/winter for 2 and 4 pipes installation). Control of traditional or PWM modulating valve units. Room temperature probe and water temperature probe. Digital input configurable as: window contact, economy, heating or cooling remote changeover, periodic ventilation. Configuration dip switch. TTL serial port with Modbus protocol for installation in BMS.

MTW wall mounted

Fan speed slider, mode slider (OFF/summer/winter). Thermostat with set point regulation. ON/OFF valve unit control (summer/winter for 2 pipes installation), ON/OFF second valve unit control (winter for 4 pipes installation). Room temperature probe. Remote water temperature probe.

PSW wall mounted

Fan speed slider, mode slider (OFF/summer/winter). ON/OFF valve unit control (summer/winter for 2 pipes installation), ON/OFF second valve unit control (winter for 4 pipes installation). Remote water temperature probe.

Remote Control EKW

User interface for selection of functioning mode (OFF/summer/winter/AUTO), fan speed (Max/Med/Min/AUTO), temperature set. Control of main and additional coil valve unit (summer/winter - 2 and 4 pipes installation) . Management of traditional ON/OFF valve unit or modulating valve unit 0-10V or 3 points . Air and water temperature probe. Multifunction digital input configurable by user. Configuration dip switch.
Modbus protocol for installation in BMS (e.g. Idrorelax system by Climaveneta). Installation and management of Master-Slave system up to 8 LIFE2 fan coil units.
Easy control installation thanks to 2 wires connection.

iK control with LCD screen

Interface with LCD screen with user-friendly icons. Control kit for universal installation: wall-mounted as well as plug-in. Selection of functioning mode (OFF/summer/winter/AUTO), fan speed (Max/Med/Min/AUTO), temperature set. Control iK could function manually or with weekly timer regulation configurable by the customer.
Control of main coil valve unit (summer/winter - 2 pipes) and additional coil (winter - 4 pipes). Management of traditional ON/OFF valve unit or modulating valve unit 0-10V or 3 points (supply 230 VAC or 24V) .
Parameters configurable directly by user. Modbus protocol for installation in Building Management System (e.g. Idrorelax system by Climaveneta). Installation and management of Master-Slave system up to 8 LIFE2 fan coil units.
Easy control installation thanks to 2 wires connection through HB power board

Remote control

In combination with (i)HB powerboard on board of the units, it's possible to have Set-point regulation, selection of functioning mode (cool, heat, dehumidify, fan), and fan speed (Max, Med, Min, AUTO). User-sfriendly compact remote control with fine aethetics.

a-LIFE2 HP DFIV/DLIV			0302	0402	0502	0602	0702
ELECTRICAL DATA							
Power supply		V/ph/Hz	230/1/50	230/1/50	230/1/50	230/1/50	230/1/50
2 PIPES SYSTEM CONFIGURATION							
ENERGY EFFICIENCY							
COOLING (EN14511 VALUE)							
FCEER	(1)(6)	kW/kW	37	40	58	58	43
FCEER Class			F	E	D	D	E
HEATING ONLY (EN14511 VALUE)							
FCCOP	(2)(6)	kW/kW	41	45	65	66	49
FCCOP Class			F	F	E	E	F
PERFORMANCE							
MIN SPEED							
Fan Power Input	(1)	W	52,0	52,0	38,0	45,0	67,0
Air flow rate	(1)	m³/h	392	435	464	516	584
Total capacity in cooling mode	(1)	kW	2,08	2,21	2,28	2,92	3,22
Total Net Cooling Capacity	(1)(6)(7)	kW	2,03	2,16	2,24	2,88	3,15
Sensible capacity in cooling mode	(1)	kW	1,69	1,82	1,71	2,16	2,49
Net sensible cooling capacity	(1)(6)(7)	kW	1,64	1,77	1,67	2,11	2,42
Net latent power in cooling	(1)(6)(7)	kW	0,39	0,39	0,57	0,76	0,73
Max water flow	(1)	l/s	0,10	0,11	0,11	0,14	0,15
Pressure Drop in cooling mode	(1)	kPa	16	14	4	11	9
Total capacity (heating mode)	(2)	kW	2,33	2,48	2,55	3,27	3,61
Total Net Heating Capacity	(2)(6)	kW	2,38	2,53	2,59	3,32	3,68
Water flow in heating mode	(2)	l/s	0,11	0,12	0,12	0,16	0,17
Pressure drop in heating mode	(2)	kPa	18	19	5	12	11
Sound Pressure	(3)	dB(A)	42	45	34	41	38
Sound Power	(4)(7)	dB(A)	51	54	43	50	47
MED SPEED							
Fan Power Input	(1)	W	71,0	71,0	53,0	63,0	96,0
Air flow rate	(1)	m³/h	500	555	525	583	767
Total capacity in cooling mode	(1)	kW	2,31	2,70	3,04	3,23	3,57
Total Net Cooling Capacity	(1)(6)(7)	kW	2,24	2,63	2,99	3,17	3,48
Sensible capacity in cooling mode	(1)	kW	1,90	2,24	2,31	2,42	2,84
Net sensible cooling capacity	(1)(6)(7)	kW	1,83	2,17	2,25	2,36	2,74
Net latent power in cooling	(1)(6)(7)	kW	0,41	0,46	0,73	0,81	0,73
Max water flow	(1)	l/s	0,11	0,13	0,15	0,15	0,17
Pressure Drop in cooling mode	(1)	kPa	20	22	8	13	12
Total capacity (heating mode)	(2)	kW	2,59	3,03	3,40	3,62	4,00
Total Net Heating Capacity	(2)(6)	kW	2,66	3,10	3,46	3,68	4,10
Water flow in heating mode	(2)	l/s	0,13	0,15	0,16	0,17	0,19
Pressure drop in heating mode	(2)	kPa	22	28	9	15	13
Sound Pressure	(3)	dB(A)	45	52	41	44	41
Sound Power	(4)(7)	dB(A)	54	61	50	53	50
MAX SPEED							
Fan Power Input	(1)	W	95,0	95,0	75,0	89,0	132
Air flow rate	(1)	m³/h	561	623	705	783	1004
Total capacity in cooling mode	(1)	kW	2,88	3,28	3,74	4,14	4,62
Total Net Cooling Capacity	(1)(6)(7)	kW	2,79	3,19	3,67	4,05	4,49
Sensible capacity in cooling mode	(1)	kW	2,39	2,77	2,93	3,21	3,91
Net sensible cooling capacity	(1)(6)(7)	kW	2,30	2,67	2,85	3,12	3,78
Net latent power in cooling	(1)(6)(7)	kW	0,49	0,51	0,81	0,93	0,71
Max water flow	(1)	l/s	0,14	0,16	0,18	0,20	0,22
Pressure Drop in cooling mode	(1)	kPa	32	32	12	22	19
Total capacity (heating mode)	(2)	kW	3,23	3,67	4,19	4,64	5,18
Total Net Heating Capacity	(2)(6)	kW	3,33	3,77	4,27	4,73	5,31
Water flow in heating mode	(2)	l/s	0,16	0,18	0,20	0,22	0,25
Pressure drop in heating mode	(2)	kPa	34	40	13	23	21
Sound Pressure	(3)	dB(A)	52	56	47	51	52
Sound Power	(4)(7)	dB(A)	61	65	56	60	61
SIZE AND WEIGHT							
A	(5)	mm	650	650	850	850	1050
B	(5)	mm	215	215	215	215	215
H	(5)	mm	450	450	450	450	450
Operating weight	(5)	kg	14	15	20	21	24

Notes:
1 Room temperature 27 °C d.b./19 °C w.b.; Chilled water (in/out) 7/12 °C.
2 Room temperature 20 °C d.b.; Hot water (in/out) 45/40 °C
3 Sound pressure level in free field on a reflective surface, 1 m from fan front and 1 m from the ground. Non -binding value obtained fron sound power level.
4 Sound power on the basis of measurements made in compliance with ISO 3741 and Eurovent 8/2.
5 Unit in standard configuration/execution, without optional accessories.
6 Values in compliance with EN14511-3:2013.
7 Values in compliance with [REGULATION (EU) N. 2016/2281]

a-LIFE2 HP DFIV/DLIV			0802	0902	1002	1102	1202
ELECTRICAL DATA							
Power supply		V/ph/Hz	230/1/50	230/1/50	230/1/50	230/1/50	230/1/50
2 PIPES SYSTEM CONFIGURATION							
ENERGY EFFICIENCY							
COOLING (EN14511 VALUE)							
FCEER	(1)(6)	kW/kW	49	43	48	41	44
FCEER Class			E	E	E	E	E
HEATING ONLY (EN14511 VALUE)							
FCCOP	(2)(6)	kW/kW	55	48	53	46	50
FCCOP Class			E	F	E	F	E
PERFORMANCE							
MIN SPEED							
Fan Power Input	(1)	W	67,0	112	112	168	168
Air flow rate	(1)	m³/h	649	923	1026	1381	1534
Total capacity in cooling mode	(1)	kW	3,50	4,83	5,40	6,90	7,40
Total Net Cooling Capacity	(1)(6)(7)	kW	3,43	4,72	5,29	6,74	7,24
Sensible capacity in cooling mode	(1)	kW	2,78	3,88	4,42	5,83	6,25
Net sensible cooling capacity	(1)(6)(7)	kW	2,71	3,77	4,31	5,66	6,08
Net latent power in cooling	(1)(6)(7)	kW	0,72	0,95	0,98	1,07	1,15
Max water flow	(1)	l/s	0,17	0,23	0,26	0,33	0,35
Pressure Drop in cooling mode	(1)	kPa	13	20	24	10	29
Total capacity (heating mode)	(2)	kW	3,93	5,42	6,05	7,73	8,30
Total Net Heating Capacity	(2)(6)	kW	3,99	5,53	6,16	7,90	8,46
Water flow in heating mode	(2)	l/s	0,19	0,26	0,29	0,37	0,40
Pressure drop in heating mode	(2)	kPa	12	23	28	13	38
Sound Pressure	(3)	dB(A)	41	47	51	54	54
Sound Power	(4)(7)	dB(A)	50	56	60	63	63
MED SPEED							
Fan Power Input	(1)	W	96,0	135	135	179	179
Air flow rate	(1)	m³/h	852	1078	1198	1547	1719
Total capacity in cooling mode	(1)	kW	4,49	5,70	6,25	7,50	8,10
Total Net Cooling Capacity	(1)(6)(7)	kW	4,40	5,57	6,12	7,32	7,92
Sensible capacity in cooling mode	(1)	kW	3,74	4,67	5,15	6,46	7,03
Net sensible cooling capacity	(1)(6)(7)	kW	3,64	4,53	5,01	6,28	6,85
Net latent power in cooling	(1)(6)(7)	kW	0,75	1,03	1,10	1,04	1,07
Max water flow	(1)	l/s	0,21	0,27	0,30	0,36	0,39
Pressure Drop in cooling mode	(1)	kPa	21	28	33	12	35
Total capacity (heating mode)	(2)	kW	5,03	6,39	7,00	8,40	9,08
Total Net Heating Capacity	(2)(6)	kW	5,13	6,53	7,14	8,58	9,26
Water flow in heating mode	(2)	l/s	0,24	0,31	0,34	0,41	0,44
Pressure drop in heating mode	(2)	kPa	19	32	37	16	45
Sound Pressure	(3)	dB(A)	49	51	54	55	57
Sound Power	(4)(7)	dB(A)	58	60	63	64	66
MAX SPEED							
Fan Power Input	(1)	W	132	149	149	194	194
Air flow rate	(1)	m³/h	1116	1390	1544	1740	1933
Total capacity in cooling mode	(1)	kW	5,20	6,20	7,20	8,05	8,60
Total Net Cooling Capacity	(1)(6)(7)	kW	5,07	6,05	7,05	7,86	8,41
Sensible capacity in cooling mode	(1)	kW	4,44	5,14	5,91	6,99	7,32
Net sensible cooling capacity	(1)(6)(7)	kW	4,31	4,99	5,76	6,80	7,13
Net latent power in cooling	(1)(6)(7)	kW	0,76	1,06	1,29	1,06	1,28
Max water flow	(1)	l/s	0,25	0,30	0,34	0,38	0,41
Pressure Drop in cooling mode	(1)	kPa	29	34	43	14	40
Total capacity (heating mode)	(2)	kW	5,83	6,95	8,07	9,02	9,64
Total Net Heating Capacity	(2)(6)	kW	5,97	7,10	8,22	9,21	9,83
Water flow in heating mode	(2)	l/s	0,28	0,34	0,39	0,44	0,47
Pressure drop in heating mode	(2)	kPa	25	37	48	18	51
Sound Pressure	(3)	dB(A)	55	54	59	57	59
Sound Power	(4)(7)	dB(A)	64	63	68	66	68
SIZE AND WEIGHT							
A	(5)	mm	1050	1250	1250	1450	1450
B	(5)	mm	215	215	215	215	215
H	(5)	mm	450	450	450	450	450
Operating weight	(5)	kg	25	28	29	31	34

Notes:
1 Room temperature 27 °C d.b./19 °C w.b.; Chilled water (in/out) 7/12 °C.
2 Room temperature 20 °C d.b.; Hot water (in/out) 45/40 °C
3 Sound pressure level in free field on a reflective surface, 1 m from fan front and 1 m from the ground. Non -binding value obtained fron sound power level.
4 Sound power on the basis of measurements made in compliance with ISO 3741 and Eurovent 8/2.
5 Unit in standard configuration/execution, without optional accessories.
6 Values in compliance with EN14511-3:2013.
7 Values in compliance with [REGULATION (EU) N. 2016/2281]
Certified data in EUROVENT

a-LIFE2 HP DFIO/DLIO			0302	0402	0502	0602	0702
ELECTRICAL DATA							
Power supply		V/ph/Hz	230/1/50	230/1/50	230/1/50	230/1/50	230/1/50
2 PIPES SYSTEM CONFIGURATION							
ENERGY EFFICIENCY							
COOLING (EN14511 VALUE)							
FCEER	(1)(6)	kW/kW	37	40	58	58	43
FCEER Class			F	E	D	D	E
HEATING ONLY (EN14511 VALUE)							
FCCOP	(2)(6)	kW/kW	41	45	65	66	49
FCCOP Class			F	F	E	E	F
PERFORMANCE							
MIN SPEED							
Fan Power Input	(1)	W	52,0	52,0	38,0	45,0	67,0
Air flow rate	(1)	m³/h	392	435	464	516	584
Total capacity in cooling mode	(1)	kW	2,08	2,21	2,28	2,92	3,22
Total Net Cooling Capacity	(1)(6)(7)	kW	2,03	2,16	2,24	2,88	3,15
Sensible capacity in cooling mode	(1)	kW	1,69	1,82	1,71	2,16	2,49
Net sensible cooling capacity	(1)(6)(7)	kW	1,64	1,77	1,67	2,11	2,42
Net latent power in cooling	(1)(6)(7)	kW	0,39	0,39	0,57	0,76	0,73
Max water flow	(1)	l/s	0,10	0,11	0,11	0,14	0,15
Pressure Drop in cooling mode	(1)	kPa	16	14	4	11	9
Total capacity (heating mode)	(2)	kW	2,33	2,48	2,55	3,27	3,61
Total Net Heating Capacity	(2)(6)	kW	2,38	2,53	2,59	3,32	3,68
Water flow in heating mode	(2)	l/s	0,11	0,12	0,12	0,16	0,17
Pressure drop in heating mode	(2)	kPa	18	19	5	12	11
Sound Pressure	(3)	dB(A)	42	45	34	41	38
Sound Power	(4)(7)	dB(A)	51	54	43	50	47
MED SPEED							
Fan Power Input	(1)	W	71,0	71,0	53,0	63,0	96,0
Air flow rate	(1)	m³/h	500	555	525	583	767
Total capacity in cooling mode	(1)	kW	2,31	2,70	3,04	3,23	3,57
Total Net Cooling Capacity	(1)(6)(7)	kW	2,24	2,63	2,99	3,17	3,48
Sensible capacity in cooling mode	(1)	kW	1,90	2,24	2,31	2,42	2,84
Net sensible cooling capacity	(1)(6)(7)	kW	1,83	2,17	2,25	2,36	2,74
Net latent power in cooling	(1)(6)(7)	kW	0,41	0,46	0,73	0,81	0,73
Max water flow	(1)	l/s	0,11	0,13	0,15	0,15	0,17
Pressure Drop in cooling mode	(1)	kPa	20	22	8	13	12
Total capacity (heating mode)	(2)	kW	2,59	3,03	3,40	3,62	4,00
Total Net Heating Capacity	(2)(6)	kW	2,66	3,10	3,46	3,68	4,10
Water flow in heating mode	(2)	l/s	0,13	0,15	0,16	0,17	0,19
Pressure drop in heating mode	(2)	kPa	22	28	9	15	13
Sound Pressure	(3)	dB(A)	45	52	41	44	41
Sound Power	(4)(7)	dB(A)	54	61	50	53	50
MAX SPEED							
Fan Power Input	(1)	W	95,0	95,0	75,0	89,0	132
Air flow rate	(1)	m³/h	561	623	705	783	1004
Total capacity in cooling mode	(1)	kW	2,88	3,28	3,74	4,14	4,62
Total Net Cooling Capacity	(1)(6)(7)	kW	2,79	3,19	3,67	4,05	4,49
Sensible capacity in cooling mode	(1)	kW	2,39	2,77	2,93	3,21	3,91
Net sensible cooling capacity	(1)(6)(7)	kW	2,30	2,67	2,85	3,12	3,78
Net latent power in cooling	(1)(6)(7)	kW	0,49	0,51	0,81	0,93	0,71
Max water flow	(1)	l/s	0,14	0,16	0,18	0,20	0,22
Pressure Drop in cooling mode	(1)	kPa	32	32	12	22	19
Total capacity (heating mode)	(2)	kW	3,23	3,67	4,19	4,64	5,18
Total Net Heating Capacity	(2)(6)	kW	3,33	3,77	4,27	4,73	5,31
Water flow in heating mode	(2)	l/s	0,16	0,18	0,20	0,22	0,25
Pressure drop in heating mode	(2)	kPa	34	40	13	23	21
Sound Pressure	(3)	dB(A)	52	56	47	51	52
Sound Power	(4)(7)	dB(A)	61	65	56	60	61
SIZE AND WEIGHT							
A	(5)	mm	745	745	945	945	1145
B	(5)	mm	215	215	215	215	215
H	(5)	mm	450	450	450	450	450
Operating weight	(5)	kg	14	15	20	21	24

Notes:
1 Room temperature 27 °C d.b./19 °C w.b.; Chilled water (in/out) 7/12 °C.
2 Room temperature 20 °C d.b.; Hot water (in/out) 45/40 °C
3 Sound pressure level in free field on a reflective surface, 1 m from fan front and 1 m from the ground. Non -binding value obtained fron sound power level.
4 Sound power on the basis of measurements made in compliance with ISO 3741 and Eurovent 8/2.
5 Unit in standard configuration/execution, without optional accessories.
6 Values in compliance with EN14511-3:2013.
7 Values in compliance with [REGULATION (EU) N. 2016/2281]

a-LIFE2 HP DFIO/DLIO			0802	0902	1002	1102	1202
ELECTRICAL DATA							
Power supply		V/ph/Hz	230/1/50	230/1/50	230/1/50	230/1/50	230/1/50
2 PIPES SYSTEM CONFIGURATION							
ENERGY EFFICIENCY							
COOLING (EN14511 VALUE)							
FCEER	(1)(6)	kW/kW	49	43	48	41	44
FCEER Class			E	E	E	E	E
HEATING ONLY (EN14511 VALUE)							
FCCOP	(2)(6)	kW/kW	55	48	53	46	50
FCCOP Class			E	F	E	F	E
PERFORMANCE							
MIN SPEED							
Fan Power Input	(1)	W	67,0	112	112	168	168
Air flow rate	(1)	m³/h	649	923	1026	1381	1534
Total capacity in cooling mode	(1)	kW	3,50	4,83	5,40	6,90	7,40
Total Net Cooling Capacity	(1)(6)(7)	kW	3,43	4,72	5,29	6,74	7,24
Sensible capacity in cooling mode	(1)	kW	2,78	3,88	4,42	5,83	6,25
Net sensible cooling capacity	(1)(6)(7)	kW	2,71	3,77	4,31	5,66	6,08
Net latent power in cooling	(1)(6)(7)	kW	0,72	0,95	0,98	1,07	1,15
Max water flow	(1)	l/s	0,17	0,23	0,26	0,33	0,35
Pressure Drop in cooling mode	(1)	kPa	13	20	24	10	29
Total capacity (heating mode)	(2)	kW	3,93	5,42	6,05	7,73	8,30
Total Net Heating Capacity	(2)(6)	kW	3,99	5,53	6,16	7,90	8,46
Water flow in heating mode	(2)	l/s	0,19	0,26	0,29	0,37	0,40
Pressure drop in heating mode	(2)	kPa	12	23	28	13	38
Sound Pressure	(3)	dB(A)	41	47	51	54	54
Sound Power	(4)(7)	dB(A)	50	56	60	63	63
MED SPEED							
Fan Power Input	(1)	W	96,0	135	135	179	179
Air flow rate	(1)	m³/h	852	1078	1198	1547	1719
Total capacity in cooling mode	(1)	kW	4,49	5,70	6,25	7,50	8,10
Total Net Cooling Capacity	(1)(6)(7)	kW	4,40	5,57	6,12	7,32	7,92
Sensible capacity in cooling mode	(1)	kW	3,74	4,67	5,15	6,46	7,03
Net sensible cooling capacity	(1)(6)(7)	kW	3,64	4,53	5,01	6,28	6,85
Net latent power in cooling	(1)(6)(7)	kW	0,75	1,03	1,10	1,04	1,07
Max water flow	(1)	l/s	0,21	0,27	0,30	0,36	0,39
Pressure Drop in cooling mode	(1)	kPa	21	28	33	12	35
Total capacity (heating mode)	(2)	kW	5,03	6,39	7,00	8,40	9,08
Total Net Heating Capacity	(2)(6)	kW	5,13	6,53	7,14	8,58	9,26
Water flow in heating mode	(2)	l/s	0,24	0,31	0,34	0,41	0,44
Pressure drop in heating mode	(2)	kPa	19	32	37	16	45
Sound Pressure	(3)	dB(A)	49	51	54	55	57
Sound Power	(4)(7)	dB(A)	58	60	63	64	66
MAX SPEED							
Fan Power Input	(1)	W	132	149	149	194	194
Air flow rate	(1)	m³/h	1116	1390	1544	1740	1933
Total capacity in cooling mode	(1)	kW	5,20	6,20	7,20	8,05	8,60
Total Net Cooling Capacity	(1)(6)(7)	kW	5,07	6,05	7,05	7,86	8,41
Sensible capacity in cooling mode	(1)	kW	4,44	5,14	5,91	6,99	7,32
Net sensible cooling capacity	(1)(6)(7)	kW	4,31	4,99	5,76	6,80	7,13
Net latent power in cooling	(1)(6)(7)	kW	0,76	1,06	1,29	1,06	1,28
Max water flow	(1)	l/s	0,25	0,30	0,34	0,38	0,41
Pressure Drop in cooling mode	(1)	kPa	29	34	43	14	40
Total capacity (heating mode)	(2)	kW	5,83	6,95	8,07	9,02	9,64
Total Net Heating Capacity	(2)(6)	kW	5,97	7,10	8,22	9,21	9,83
Water flow in heating mode	(2)	l/s	0,28	0,34	0,39	0,44	0,47
Pressure drop in heating mode	(2)	kPa	25	37	48	18	51
Sound Pressure	(3)	dB(A)	55	54	59	57	59
Sound Power	(4)(7)	dB(A)	64	63	68	66	68
SIZE AND WEIGHT							
A	(5)	mm	1145	1345	1345	1545	1545
B	(5)	mm	215	215	215	215	215
H	(5)	mm	450	450	450	450	450
Operating weight	(5)	kg	25	28	29	31	34

Notes:
1 Room temperature 27 °C d.b./19 °C w.b.; Chilled water (in/out) 7/12 °C.
2 Room temperature 20 °C d.b.; Hot water (in/out) 45/40 °C
3 Sound pressure level in free field on a reflective surface, 1 m from fan front and 1 m from the ground. Non -binding value obtained fron sound power level.
4 Sound power on the basis of measurements made in compliance with ISO 3741 and Eurovent 8/2.
5 Unit in standard configuration/execution, without optional accessories.
6 Values in compliance with EN14511-3:2013.
7 Values in compliance with [REGULATION (EU) N. 2016/2281]
Certified data in EUROVENT

a-LIFE2 HP DFIV/DLIV			0304	0404	0504	0604	0704
ELECTRICAL DATA							
Power supply		V/ph/Hz	230/1/50	230/1/50	230/1/50	230/1/50	230/1/50
4 PIPES SYSTEM CONFIGURATION							
ENERGY EFFICIENCY							
COOLING (EN14511 VALUE)							
FCEER	(1)(6)	kW/kW	37	40	58	69	43
FCEER Class			F	E	D	D	E
HEATING ONLY (EN14511 VALUE)							
FCCOP	(2)(6)	kW/kW	27	29	46	55	31
FCCOP Class			G	G	F	E	G
PERFORMANCE							
MIN SPEED							
Fan Power Input	(1)	W	52,0	52,0	38,0	38,0	67,0
Air flow rate	(1)	m³/h	392	435	464	516	584
Total capacity in cooling mode	(1)	kW	2,08	2,21	2,28	2,92	3,22
Total Net Cooling Capacity	(1)(6)(7)	kW	2,03	2,16	2,24	2,88	3,15
Sensible capacity in cooling mode	(1)	kW	1,69	1,82	1,84	2,37	2,49
Net sensible cooling capacity	(1)(6)(7)	kW	1,64	1,77	1,80	2,33	2,42
Net latent power in cooling	(1)(6)(7)	kW	0,39	0,39	0,44	0,55	0,73
Max water flow	(1)	l/s	0,10	0,11	0,11	0,14	0,15
Pressure Drop in cooling mode	(1)	kPa	16	14	4	7	9
Total capacity (heating mode)	(2)	kW	1,50	1,59	1,78	2,28	2,30
Total Net Heating Capacity	(2)(6)	kW	1,55	1,64	1,82	2,32	2,37
Water flow in heating mode	(2)	l/s	0,04	0,04	0,04	0,06	0,06
Pressure drop in heating mode	(2)	kPa	6	7	8	13	4
Sound Pressure	(3)	dB(A)	42	45	34	41	38
Sound Power	(4)(7)	dB(A)	51	54	43	50	47
MED SPEED							
Fan Power Input	(1)	W	71,0	71,0	53,0	53,0	96,0
Air flow rate	(1)	m³/h	500	555	525	583	767
Total capacity in cooling mode	(1)	kW	2,31	2,70	3,04	3,23	3,57
Total Net Cooling Capacity	(1)(6)(7)	kW	2,24	2,63	2,99	3,18	3,48
Sensible capacity in cooling mode	(1)	kW	1,90	2,24	2,48	2,66	2,84
Net sensible cooling capacity	(1)(6)(7)	kW	1,83	2,17	2,43	2,61	2,74
Net latent power in cooling	(1)(6)(7)	kW	0,41	0,46	0,56	0,57	0,73
Max water flow	(1)	l/s	0,11	0,13	0,15	0,15	0,17
Pressure Drop in cooling mode	(1)	kPa	20	22	8	9	12
Total capacity (heating mode)	(2)	kW	1,67	1,95	2,37	2,52	2,55
Total Net Heating Capacity	(2)(6)	kW	1,74	2,02	2,43	2,58	2,65
Water flow in heating mode	(2)	l/s	0,04	0,05	0,06	0,06	0,06
Pressure drop in heating mode	(2)	kPa	7	10	14	16	5
Sound Pressure	(3)	dB(A)	45	52	41	44	41
Sound Power	(4)(7)	dB(A)	54	61	50	53	50
MAX SPEED							
Fan Power Input	(1)	W	95,0	95,0	75,0	75,0	132
Air flow rate	(1)	m³/h	561	623	705	783	1004
Total capacity in cooling mode	(1)	kW	2,88	3,28	3,74	4,14	4,62
Total Net Cooling Capacity	(1)(6)(7)	kW	2,79	3,19	3,67	4,07	4,49
Sensible capacity in cooling mode	(1)	kW	2,39	2,77	3,15	3,53	3,91
Net sensible cooling capacity	(1)(6)(7)	kW	2,30	2,67	3,08	3,45	3,78
Net latent power in cooling	(1)(6)(7)	kW	0,49	0,51	0,59	0,61	0,71
Max water flow	(1)	l/s	0,14	0,16	0,18	0,20	0,22
Pressure Drop in cooling mode	(1)	kPa	32	32	12	15	19
Total capacity (heating mode)	(2)	kW	2,08	2,36	2,92	3,24	3,30
Total Net Heating Capacity	(2)(6)	kW	2,17	2,46	3,00	3,31	3,43
Water flow in heating mode	(2)	l/s	0,05	0,06	0,07	0,08	0,08
Pressure drop in heating mode	(2)	kPa	11	14	21	25	9
Sound Pressure	(3)	dB(A)	52	56	47	51	52
Sound Power	(4)(7)	dB(A)	61	65	56	60	61
SIZE AND WEIGHT							
A	(5)	mm	650	650	850	850	1050
B	(5)	mm	215	215	215	215	215
H	(5)	mm	450	450	450	450	450
Operating weight	(5)	kg	15	16	21	22	25

Notes:
1 Room temperature 27°C d.b./18,9°C w.b., Chilled water (in/out) 7°C/12°C.
2 Room temperature 20 °C d.b., hot water (in/out) 65/55 °C
3 Sound pressure level in free field on a reflective surface, 1 m from fan front and 1 m from the ground. Non -binding value obtained fron sound power level.
4 Sound power on the basis of measurements made in compliance with ISO 3741 and Eurovent 8/2.
5 Unit in standard configuration/execution, without optional accessories.
6 Values in compliance with EN14511-3:2013.
7 Values in compliance with [REGULATION (EU) N. 2016/2281]

a-LIFE2 HP DFIV/DLIV			0804	0904	1004	1104	1204
ELECTRICAL DATA							
Power supply		V/ph/Hz	230/1/50	230/1/50	230/1/50	230/1/50	230/1/50
4 PIPES SYSTEM CONFIGURATION							
ENERGY EFFICIENCY							
COOLING (EN14511 VALUE)							
FCEER	(1)(6)	kW/kW	49	43	48	41	44
FCEER Class			E	E	E	E	E
HEATING ONLY (EN14511 VALUE)							
FCCOP	(2)(6)	kW/kW	35	30	34	29	32
FCCOP Class			G	G	G	G	G
PERFORMANCE							
MIN SPEED							
Fan Power Input	(1)	W	67,0	112	112	168	168
Air flow rate	(1)	m³/h	649	923	1026	1381	1534
Total capacity in cooling mode	(1)	kW	3,50	4,83	5,40	6,90	7,40
Total Net Cooling Capacity	(1)(6)(7)	kW	3,43	4,72	5,29	6,74	7,24
Sensible capacity in cooling mode	(1)	kW	2,78	3,88	4,42	5,83	6,25
Net sensible cooling capacity	(1)(6)(7)	kW	2,71	3,77	4,31	5,66	6,08
Net latent power in cooling	(1)(6)(7)	kW	0,72	0,95	0,98	1,07	1,15
Max water flow	(1)	l/s	0,17	0,23	0,26	0,33	0,35
Pressure Drop in cooling mode	(1)	kPa	13	21	24	10	29
Total capacity (heating mode)	(2)	kW	2,50	3,43	3,84	4,91	5,26
Total Net Heating Capacity	(2)(6)	kW	2,56	3,54	3,95	5,07	5,43
Water flow in heating mode	(2)	l/s	0,06	0,08	0,09	0,12	0,13
Pressure drop in heating mode	(2)	kPa	5	8	9	26	30
Sound Pressure	(3)	dB(A)	41	49	51	54	54
Sound Power	(4)(7)	dB(A)	50	58	60	63	63
MED SPEED							
Fan Power Input	(1)	W	96,0	135	135	179	179
Air flow rate	(1)	m³/h	852	1078	1198	1547	1719
Total capacity in cooling mode	(1)	kW	4,49	5,70	6,25	7,50	8,10
Total Net Cooling Capacity	(1)(6)(7)	kW	4,40	5,57	6,12	7,32	7,92
Sensible capacity in cooling mode	(1)	kW	3,74	4,67	5,15	6,46	7,03
Net sensible cooling capacity	(1)(6)(7)	kW	3,64	4,53	5,01	6,28	6,85
Net latent power in cooling	(1)(6)(7)	kW	0,75	1,03	1,10	1,04	1,07
Max water flow	(1)	l/s	0,21	0,27	0,30	0,36	0,39
Pressure Drop in cooling mode	(1)	kPa	21	29	33	12	35
Total capacity (heating mode)	(2)	kW	3,21	4,05	4,44	5,33	5,76
Total Net Heating Capacity	(2)(6)	kW	3,31	4,19	4,58	5,51	5,94
Water flow in heating mode	(2)	l/s	0,08	0,10	0,11	0,13	0,14
Pressure drop in heating mode	(2)	kPa	8	10	12	30	35
Sound Pressure	(3)	dB(A)	49	51	54	55	57
Sound Power	(4)(7)	dB(A)	58	60	63	64	66
MAX SPEED							
Fan Power Input	(1)	W	132	149	149	194	194
Air flow rate	(1)	m³/h	1116	1390	1544	1740	1933
Total capacity in cooling mode	(1)	kW	5,20	6,20	7,20	8,05	8,60
Total Net Cooling Capacity	(1)(6)(7)	kW	5,07	6,05	7,05	7,86	8,41
Sensible capacity in cooling mode	(1)	kW	4,44	5,14	5,91	6,99	7,32
Net sensible cooling capacity	(1)(6)(7)	kW	4,31	4,99	5,76	6,80	7,13
Net latent power in cooling	(1)(6)(7)	kW	0,76	1,06	1,29	1,06	1,28
Max water flow	(1)	l/s	0,25	0,30	0,34	0,38	0,41
Pressure Drop in cooling mode	(1)	kPa	29	34	43	14	40
Total capacity (heating mode)	(2)	kW	3,72	4,41	5,12	5,72	6,12
Total Net Heating Capacity	(2)(6)	kW	3,85	4,56	5,27	5,92	6,31
Water flow in heating mode	(2)	l/s	0,09	0,11	0,12	0,14	0,15
Pressure drop in heating mode	(2)	kPa	11	12	16	35	39
Sound Pressure	(3)	dB(A)	55	54	59	57	59
Sound Power	(4)(7)	dB(A)	64	63	68	66	68
SIZE AND WEIGHT							
A	(5)	mm	1050	1250	1250	1450	1450
B	(5)	mm	215	215	215	215	215
H	(5)	mm	450	450	450	450	450
Operating weight	(5)	kg	26	29	31	32	35

Notes:
1 Room temperature 27°C d.b./18,9°C w.b., Chilled water (in/out) 7°C/12°C.
2 Room temperature 20 °C d.b., hot water (in/out) 65/55 °C
3 Sound pressure level in free field on a reflective surface, 1 m from fan front and 1 m from the ground. Non -binding value obtained fron sound power level.
4 Sound power on the basis of measurements made in compliance with ISO 3741 and Eurovent 8/2.
5 Unit in standard configuration/execution, without optional accessories.
6 Values in compliance with EN14511-3:2013.
7 Values in compliance with [REGULATION (EU) N. 2016/2281]
Certified data in EUROVENT

a-LIFE2 HP DFIO/DLIO			0304	0404	0504	0604	0704
ELECTRICAL DATA							
Power supply		V/ph/Hz	230/1/50	230/1/50	230/1/50	230/1/50	230/1/50
4 PIPES SYSTEM CONFIGURATION							
ENERGY EFFICIENCY							
COOLING (EN14511 VALUE)							
FCEER	(1)(6)	kW/kW	37	40	58	69	43
FCEER Class			F	E	D	D	E
HEATING ONLY (EN14511 VALUE)							
FCCOP	(2)(6)	kW/kW	27	29	46	55	31
FCCOP Class			G	G	F	E	G
PERFORMANCE							
MIN SPEED							
Fan Power Input	(1)	W	52,0	52,0	38,0	38,0	67,0
Air flow rate	(1)	m³/h	392	435	464	516	584
Total capacity in cooling mode	(1)	kW	2,08	2,21	2,28	2,92	3,22
Total Net Cooling Capacity	(1)(6)(7)	kW	2,03	2,16	2,24	2,88	3,15
Sensible capacity in cooling mode	(1)	kW	1,69	1,82	1,84	2,37	2,49
Net sensible cooling capacity	(1)(6)(7)	kW	1,64	1,77	1,80	2,33	2,42
Net latent power in cooling	(1)(6)(7)	kW	0,39	0,39	0,44	0,55	0,73
Max water flow	(1)	l/s	0,10	0,11	0,11	0,14	0,15
Pressure Drop in cooling mode	(1)	kPa	16	14	4	7	9
Total capacity (heating mode)	(2)	kW	1,50	1,59	1,78	2,28	2,30
Total Net Heating Capacity	(2)(6)	kW	1,55	1,64	1,82	2,32	2,37
Water flow in heating mode	(2)	l/s	0,04	0,04	0,04	0,06	0,06
Pressure drop in heating mode	(2)	kPa	6	7	8	13	4
Sound Pressure	(3)	dB(A)	42	45	34	41	38
Sound Power	(4)(7)	dB(A)	51	54	43	50	47
MED SPEED							
Fan Power Input	(1)	W	71,0	71,0	53,0	53,0	96,0
Air flow rate	(1)	m³/h	500	555	525	583	767
Total capacity in cooling mode	(1)	kW	2,31	2,70	3,04	3,23	3,57
Total Net Cooling Capacity	(1)(6)(7)	kW	2,24	2,63	2,99	3,18	3,48
Sensible capacity in cooling mode	(1)	kW	1,90	2,24	2,48	2,66	2,84
Net sensible cooling capacity	(1)(6)(7)	kW	1,83	2,17	2,43	2,61	2,74
Net latent power in cooling	(1)(6)(7)	kW	0,41	0,46	0,56	0,57	0,73
Max water flow	(1)	l/s	0,11	0,13	0,15	0,15	0,17
Pressure Drop in cooling mode	(1)	kPa	20	22	8	9	12
Total capacity (heating mode)	(2)	kW	1,67	1,95	2,37	2,52	2,55
Total Net Heating Capacity	(2)(6)	kW	1,74	2,02	2,43	2,58	2,65
Water flow in heating mode	(2)	l/s	0,04	0,05	0,06	0,06	0,06
Pressure drop in heating mode	(2)	kPa	7	10	14	16	5
Sound Pressure	(3)	dB(A)	45	52	41	44	41
Sound Power	(4)(7)	dB(A)	54	61	50	53	50
MAX SPEED							
Fan Power Input	(1)	W	95,0	95,0	75,0	75,0	132
Air flow rate	(1)	m³/h	561	623	705	783	1004
Total capacity in cooling mode	(1)	kW	2,88	3,28	3,74	4,14	4,62
Total Net Cooling Capacity	(1)(6)(7)	kW	2,79	3,19	3,67	4,07	4,49
Sensible capacity in cooling mode	(1)	kW	2,39	2,77	3,15	3,53	3,91
Net sensible cooling capacity	(1)(6)(7)	kW	2,30	2,67	3,08	3,45	3,78
Net latent power in cooling	(1)(6)(7)	kW	0,49	0,51	0,59	0,61	0,71
Max water flow	(1)	l/s	0,14	0,16	0,18	0,20	0,22
Pressure Drop in cooling mode	(1)	kPa	32	32	12	15	19
Total capacity (heating mode)	(2)	kW	2,08	2,36	2,92	3,24	3,30
Total Net Heating Capacity	(2)(6)	kW	2,17	2,46	3,00	3,31	3,43
Water flow in heating mode	(2)	l/s	0,05	0,06	0,07	0,08	0,08
Pressure drop in heating mode	(2)	kPa	11	14	21	25	9
Sound Pressure	(3)	dB(A)	52	56	47	51	52
Sound Power	(4)(7)	dB(A)	61	65	56	60	61
SIZE AND WEIGHT							
A	(5)	mm	745	745	945	945	1145
B	(5)	mm	215	215	215	215	215
H	(5)	mm	450	450	450	450	450
Operating weight	(5)	kg	15	16	21	22	25

Notes:
1 Room temperature 27°C d.b./18,9°C w.b., Chilled water (in/out) 7°C/12°C.
2 Room temperature 20 °C d.b., hot water (in/out) 65/55 °C
3 Sound pressure level in free field on a reflective surface, 1 m from fan front and 1 m from the ground. Non -binding value obtained fron sound power level.
4 Sound power on the basis of measurements made in compliance with ISO 3741 and Eurovent 8/2.
5 Unit in standard configuration/execution, without optional accessories.
6 Values in compliance with EN14511-3:2013.
7 Values in compliance with [REGULATION (EU) N. 2016/2281]

a-LIFE2 HP DFIO/DLIO			0804	0904	1004	1104	1204
ELECTRICAL DATA							
Power supply		V/ph/Hz	230/1/50	230/1/50	230/1/50	230/1/50	230/1/50
4 PIPES SYSTEM CONFIGURATION							
ENERGY EFFICIENCY							
COOLING (EN14511 VALUE)							
FCEER	(1)(6)	kW/kW	49	43	48	41	44
FCEER Class			E	E	E	E	E
HEATING ONLY (EN14511 VALUE)							
FCCOP	(2)(6)	kW/kW	35	30	34	29	32
FCCOP Class			G	G	G	G	G
PERFORMANCE							
MIN SPEED							
Fan Power Input	(1)	W	67,0	112	112	168	168
Air flow rate	(1)	m³/h	649	923	1026	1381	1534
Total capacity in cooling mode	(1)	kW	3,50	4,83	5,40	6,90	7,40
Total Net Cooling Capacity	(1)(6)(7)	kW	3,43	4,72	5,29	6,74	7,24
Sensible capacity in cooling mode	(1)	kW	2,78	3,88	4,42	5,83	6,25
Net sensible cooling capacity	(1)(6)(7)	kW	2,71	3,77	4,31	5,66	6,08
Net latent power in cooling	(1)(6)(7)	kW	0,72	0,95	0,98	1,07	1,15
Max water flow	(1)	l/s	0,17	0,23	0,26	0,33	0,35
Pressure Drop in cooling mode	(1)	kPa	13	21	24	10	29
Total capacity (heating mode)	(2)	kW	2,50	3,43	3,84	4,91	5,26
Total Net Heating Capacity	(2)(6)	kW	2,56	3,54	3,95	5,07	5,43
Water flow in heating mode	(2)	l/s	0,06	0,08	0,09	0,12	0,13
Pressure drop in heating mode	(2)	kPa	5	8	9	26	30
Sound Pressure	(3)	dB(A)	41	49	51	54	54
Sound Power	(4)(7)	dB(A)	50	58	60	63	63
MED SPEED							
Fan Power Input	(1)	W	96,0	135	135	179	179
Air flow rate	(1)	m³/h	852	1078	1198	1547	1719
Total capacity in cooling mode	(1)	kW	4,49	5,70	6,25	7,50	8,10
Total Net Cooling Capacity	(1)(6)(7)	kW	4,40	5,57	6,12	7,32	7,92
Sensible capacity in cooling mode	(1)	kW	3,74	4,67	5,15	6,46	7,03
Net sensible cooling capacity	(1)(6)(7)	kW	3,64	4,53	5,01	6,28	6,85
Net latent power in cooling	(1)(6)(7)	kW	0,75	1,03	1,10	1,04	1,07
Max water flow	(1)	l/s	0,21	0,27	0,30	0,36	0,39
Pressure Drop in cooling mode	(1)	kPa	21	29	33	12	35
Total capacity (heating mode)	(2)	kW	3,21	4,05	4,44	5,33	5,76
Total Net Heating Capacity	(2)(6)	kW	3,31	4,19	4,58	5,51	5,94
Water flow in heating mode	(2)	l/s	0,08	0,10	0,11	0,13	0,14
Pressure drop in heating mode	(2)	kPa	8	10	12	30	35
Sound Pressure	(3)	dB(A)	49	51	54	55	57
Sound Power	(4)(7)	dB(A)	58	60	63	64	66
MAX SPEED							
Fan Power Input	(1)	W	132	149	149	194	194
Air flow rate	(1)	m³/h	1116	1390	1544	1740	1933
Total capacity in cooling mode	(1)	kW	5,20	6,20	7,20	8,05	8,60
Total Net Cooling Capacity	(1)(6)(7)	kW	5,07	6,05	7,05	7,86	8,41
Sensible capacity in cooling mode	(1)	kW	4,44	5,14	5,91	6,99	7,32
Net sensible cooling capacity	(1)(6)(7)	kW	4,31	4,99	5,76	6,80	7,13
Net latent power in cooling	(1)(6)(7)	kW	0,76	1,06	1,29	1,06	1,28
Max water flow	(1)	l/s	0,25	0,30	0,34	0,38	0,41
Pressure Drop in cooling mode	(1)	kPa	29	34	43	14	40
Total capacity (heating mode)	(2)	kW	3,72	4,41	5,12	5,72	6,12
Total Net Heating Capacity	(2)(6)	kW	3,85	4,56	5,27	5,92	6,31
Water flow in heating mode	(2)	l/s	0,09	0,11	0,12	0,14	0,15
Pressure drop in heating mode	(2)	kPa	11	12	16	35	39
Sound Pressure	(3)	dB(A)	55	54	59	57	59
Sound Power	(4)(7)	dB(A)	64	63	68	66	68
SIZE AND WEIGHT							
A	(5)	mm	1145	1345	1345	1545	1545
B	(5)	mm	215	215	215	215	215
H	(5)	mm	450	450	450	450	450
Operating weight	(5)	kg	27	29	31	32	36

Notes:
1 Room temperature 27°C d.b./18,9°C w.b., Chilled water (in/out) 7°C/12°C.
2 Room temperature 20 °C d.b., hot water (in/out) 65/55 °C
3 Sound pressure level in free field on a reflective surface, 1 m from fan front and 1 m from the ground. Non -binding value obtained fron sound power level.
4 Sound power on the basis of measurements made in compliance with ISO 3741 and Eurovent 8/2.
5 Unit in standard configuration/execution, without optional accessories.
6 Values in compliance with EN14511-3:2013.
7 Values in compliance with [REGULATION (EU) N. 2016/2281]
Certified data in EUROVENT

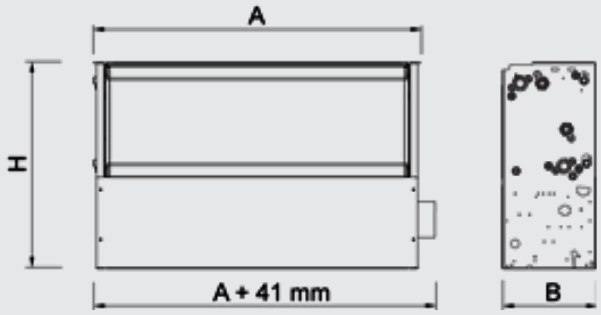
A
H
A + 41 mm
B

HYDRONIC TERMINALS

i-LIFE2 HP 0202 - 1204

High Head professional Fan-coil with Brushless EC motor for continuous regulation of airflow and fan speed. 2,00-8,76 kW

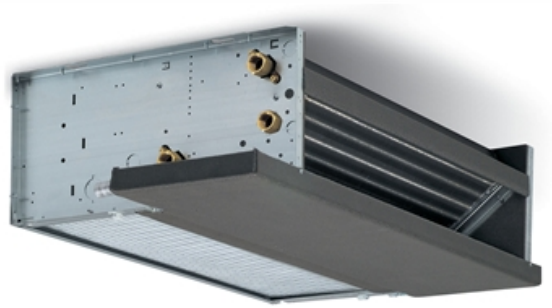

i-LIFE2 HP are the new high head Fan-coil Climaveneta in built in version with EC Brushless motor. The continuous regulation of air flow and cooling and heating capacity guarantees a total comfort and high energy saving. i-LIFE2 HP is the ideal solution for ducted systems and installations in tertiary and commercial sectors.

Version

DFIO	built-in version, front air intake, horizontal installation
DFIV	built-in version, front air intake, vertical installation
DLIO	built-in version, low air intake, horizontal installation
DLIV	built-in version, low air intake, vertical installation.

Features

High pressure centrifugal fan unit for ducted system;
High efficiency EC motor.
Modulating speed centrifugal fan and air flow regulation.
Energy consumption reduced by more than 50%
Coils with aluminium fins and copper pipes.
Configurations for 2 and 4 pipe Systems.
Left-hand water connections, easy convertible into right-hand, by simply turning the coil
Air filter on all models.
Structure in galvanised steel of high thickness for maximum resistance to rust;
Auxiliary drain pan with thermal insulation for all Horizontal versions, made of galvanized steel.
Plastic drain pan for all Vertical versions.

Accessory

- Additional coil 2-way/3-way valve unit
- Main coil 2-way/3-way valve unit
- Hot water coil kit
- Kit control board to manage 0-10V or 3 points modulating valve unit
- Kit RS485 - interface for Building Management System
- Kit Gateway interface for MyHome Bticino System
- Hose kit
- Plenum kit with round, straight or 90° air ducts.
- i-HB Power box
- Condensate drain pump
- Horizontal and vertical fan coil auxiliary tray

Controls

Remote Control EKW

User interface for selection of functioning mode (OFF/summer/winter/AUTO), fan speed (Max/Med/Min/AUTO), temperature set. Control of main and additional coil valve unit (summer/winter - 2 and 4 pipes installation) . Management of traditional ON/OFF valve unit or modulating valve unit 0-10V or 3 points . Air and water temperature probe. Multifunction digital input configurable by user. Configuration dip switch.
Modbus protocol for installation in BMS (e.g. Idrorelax system by Climaveneta). Installation and management of Master-Slave system up to 8 LIFE2 fan coil units.
Easy control installation thanks to 2 wires connection.

iK control with LCD screen

Interface with LCD screen with user-friendly icons. Control kit for universal installation: wall-mounted as well as plug-in. Selection of functioning mode (OFF/summer/winter/AUTO), fan speed (Max/Med/Min/AUTO), temperature set. Control iK could function manually or with weekly timer regulation configurable by the customer.
Control of main coil valve unit (summer/winter - 2 pipes) and additional coil (winter - 4 pipes). Management of traditional ON/OFF valve unit or modulating valve unit 0-10V or 3 points (supply 230 VAC or 24V) .
Parameters configurable directly by user. Modbus protocol for installation in Building Management System (e.g. Idrorelax system by Climaveneta). Installation and management of Master-Slave system up to 8 LIFE2 fan coil units.
Easy control installation thanks to 2 wires connection through HB power board

ATW-EC Wall Control

User interface for selection of functioning mode (Off/Summer/Winter/Auto), fan speed (Max, Med, Min, Auto), and temperature set. Control of main and additional coil valve unit. (summer/winter 2 and 4 pipes installation). Management of traditional ON/OFF valve unit. Air and water temperature probe. Multifunction digital input configurable by user. Configuration dip switch. The controls can be connected to BMS system.

i-LIFE2 HP DFIV/DLIV			0202	0402	0602	0802	1002	1202
ELECTRICAL DATA								
Power supply		V/ph/Hz	230/1/50	230/1/50	230/1/50	230/1/50	230/1/50	230/1/50
2 PIPES SYSTEM CONFIGURATION								
ENERGY EFFICIENCY								
COOLING (EN14511 VALUE)								
FCEER	(1)(6)	kW/kW	125	122	124	120	136	110
FCEER Class			B	B	B	B	B	C
HEATING ONLY (EN14511 VALUE)								
FCCOP	(2)(6)	kW/kW	141	162	173	165	183	153
FCCOP Class			C	B	B	B	B	C
PERFORMANCE								
MIN SPEED								
Fan Power Input	(1)	W	6,81	11,2	10,9	11,9	17,4	22,4
Air flow rate	(1)	m³/h	176	242	289	318	536	811
Total capacity in cooling mode	(1)	kW	1,00	1,50	1,95	2,35	3,23	4,65
Total Net Cooling Capacity	(1)(6)(7)	kW	0,99	1,49	1,94	2,33	3,22	4,63
Sensible capacity in cooling mode	(1)	kW	0,79	1,16	1,50	1,83	2,44	4,27
Net sensible cooling capacity	(1)(6)(7)	kW	0,78	1,15	1,49	1,82	2,42	4,25
Net latent power in cooling	(1)(6)(7)	kW	0,21	0,34	0,45	0,52	0,80	0,38
Max water flow	(1)	l/s	0,05	0,07	0,09	0,11	0,15	0,22
Pressure Drop in cooling mode	(1)	kPa	3	7	3	6	9	12
Total capacity (heating mode)	(2)	kW	1,18	1,68	2,28	2,70	3,61	5,21
Total Net Heating Capacity	(2)(6)	kW	1,19	1,69	2,29	2,72	3,63	5,23
Water flow in heating mode	(2)	l/s	0,06	0,08	0,11	0,13	0,17	0,25
Pressure drop in heating mode	(2)	kPa	4	9	4	6	11	15
Sound Pressure	(3)	dB(A)	30	33	33	34	37	57
Sound Power	(4)(7)	dB(A)	40	42	42	43	46	66
MED SPEED								
Fan Power Input	(1)	W	13,1	17,1	25,4	40,3	43,1	97,3
Air flow rate	(1)	m³/h	262	377	548	755	917	1437
Total capacity in cooling mode	(1)	kW	1,45	2,29	3,01	4,48	5,38	7,55
Total Net Cooling Capacity	(1)(6)(7)	kW	1,44	2,28	2,99	4,44	5,34	7,45
Sensible capacity in cooling mode	(1)	kW	1,14	1,74	2,39	3,42	4,13	6,35
Net sensible cooling capacity	(1)(6)(7)	kW	1,13	1,72	2,36	3,38	4,09	6,25
Net latent power in cooling	(1)(6)(7)	kW	0,30	0,56	0,63	1,06	1,26	1,20
Max water flow	(1)	l/s	0,07	0,11	0,14	0,21	0,26	0,36
Pressure Drop in cooling mode	(1)	kPa	7	16	8	21	24	31
Total capacity (heating mode)	(2)	kW	1,72	2,58	3,51	5,16	6,00	8,45
Total Net Heating Capacity	(2)(6)	kW	1,73	2,59	3,53	5,20	6,05	8,55
Water flow in heating mode	(2)	l/s	0,08	0,12	0,17	0,25	0,29	0,41
Pressure drop in heating mode	(2)	kPa	8	21	10	20	28	39
Sound Pressure	(3)	dB(A)	38	42	44	45	46	59
Sound Power	(4)(7)	dB(A)	47	51	53	54	56	68
MAX SPEED								
Fan Power Input	(1)	W	27,1	39,1	62,9	76,6	105	171
Air flow rate	(1)	m³/h	363	586	808	976	1351	1805
Total capacity in cooling mode	(1)	kW	2,00	3,38	4,36	5,68	7,50	8,76
Total Net Cooling Capacity	(1)(6)(7)	kW	1,97	3,34	4,30	5,60	7,40	8,59
Sensible capacity in cooling mode	(1)	kW	1,59	2,59	3,49	4,36	5,81	7,11
Net sensible cooling capacity	(1)(6)(7)	kW	1,56	2,56	3,43	4,28	5,71	6,93
Net latent power in cooling	(1)(6)(7)	kW	0,41	0,78	0,87	1,32	1,69	1,66
Max water flow	(1)	l/s	0,10	0,16	0,21	0,27	0,36	0,42
Pressure Drop in cooling mode	(1)	kPa	13	34	17	34	47	41
Total capacity (heating mode)	(2)	kW	2,40	3,68	5,09	6,53	8,51	9,82
Total Net Heating Capacity	(2)(6)	kW	2,43	3,72	5,16	6,60	8,61	9,99
Water flow in heating mode	(2)	l/s	0,12	0,18	0,25	0,32	0,41	0,47
Pressure drop in heating mode	(2)	kPa	16	41	20	31	53	53
Sound Pressure	(3)	dB(A)	48	51	53	54	56	60
Sound Power	(4)(7)	dB(A)	57	60	62	63	65	69
SIZE AND WEIGHT								
A	(5)	mm	450	650	850	1050	1250	1450
B	(5)	mm	215	215	215	215	215	215
H	(5)	mm	450	450	450	450	450	450
Operating weight	(5)	kg	11	14	20	24	28	34

Notes:
1 Room temperature 27 °C d.b./19 °C w.b.; Chilled water (in/out) 7/12 °C.
2 Room temperature 20 °C d.b.; Hot water (in/out) 45/40 °C
3 Sound pressure level in free field on a reflective surface, 1 m from fan front and 1 m from the ground. Non -binding value obtained fron sound power level.
4 Sound power on the basis of measurements made in compliance with ISO 3741 and Eurovent 8/2.
5 Unit in standard configuration/execution, without optional accessories.
6 Values in compliance with EN14511-3:2013.
7 Values in compliance with [REGULATION (EU) N. 2016/2281]
Certified data in EUROVENT

i-LIFE2 HP DFIO/DLIO			0202	0402	0602	0802	1002	1202
ELECTRICAL DATA								
Power supply		V/ph/Hz	230/1/50	230/1/50	230/1/50	230/1/50	230/1/50	230/1/50
2 PIPES SYSTEM CONFIGURATION								
ENERGY EFFICIENCY								
COOLING (EN14511 VALUE)								
FCEER	(1)(6)	kW/kW	125	122	124	120	136	110
FCEER Class			B	B	B	B	B	C
HEATING ONLY (EN14511 VALUE)								
FCCOP	(2)(6)	kW/kW	141	162	173	165	183	153
FCCOP Class			C	B	B	B	B	C
PERFORMANCE								
MIN SPEED								
Fan Power Input	(1)	W	6,81	11,2	10,9	11,9	17,4	22,4
Air flow rate	(1)	m³/h	176	242	289	318	536	811
Total capacity in cooling mode	(1)	kW	1,00	1,50	1,95	2,35	3,23	4,65
Total Net Cooling Capacity	(1)(6)(7)	kW	0,99	1,49	1,94	2,33	3,22	4,63
Sensible capacity in cooling mode	(1)	kW	0,79	1,16	1,50	1,83	2,44	4,27
Net sensible cooling capacity	(1)(6)(7)	kW	0,78	1,15	1,49	1,82	2,42	4,25
Net latent power in cooling	(1)(6)(7)	kW	0,21	0,34	0,45	0,52	0,80	0,38
Max water flow	(1)	l/s	0,05	0,07	0,09	0,11	0,15	0,22
Pressure Drop in cooling mode	(1)	kPa	3	7	3	6	9	12
Total capacity (heating mode)	(2)	kW	1,18	1,68	2,28	2,70	3,61	5,21
Total Net Heating Capacity	(2)(6)	kW	1,19	1,69	2,29	2,72	3,63	5,23
Water flow in heating mode	(2)	l/s	0,06	0,08	0,11	0,13	0,17	0,25
Pressure drop in heating mode	(2)	kPa	4	9	4	6	11	15
Sound Pressure	(3)	dB(A)	30	33	33	34	37	57
Sound Power	(4)(7)	dB(A)	40	42	42	43	46	66
MED SPEED								
Fan Power Input	(1)	W	13,1	17,1	25,4	40,3	43,1	97,3
Air flow rate	(1)	m³/h	262	377	548	755	917	1437
Total capacity in cooling mode	(1)	kW	1,45	2,29	3,01	4,48	5,38	7,55
Total Net Cooling Capacity	(1)(6)(7)	kW	1,44	2,28	2,99	4,44	5,34	7,45
Sensible capacity in cooling mode	(1)	kW	1,14	1,74	2,39	3,42	4,13	6,35
Net sensible cooling capacity	(1)(6)(7)	kW	1,13	1,72	2,36	3,38	4,09	6,25
Net latent power in cooling	(1)(6)(7)	kW	0,30	0,56	0,63	1,06	1,26	1,20
Max water flow	(1)	l/s	0,07	0,11	0,14	0,21	0,26	0,36
Pressure Drop in cooling mode	(1)	kPa	7	16	8	21	24	31
Total capacity (heating mode)	(2)	kW	1,72	2,58	3,51	5,16	6,00	8,45
Total Net Heating Capacity	(2)(6)	kW	1,73	2,59	3,53	5,20	6,05	8,55
Water flow in heating mode	(2)	l/s	0,08	0,12	0,17	0,25	0,29	0,41
Pressure drop in heating mode	(2)	kPa	8	21	10	20	28	39
Sound Pressure	(3)	dB(A)	38	42	44	45	46	59
Sound Power	(4)(7)	dB(A)	47	51	53	54	56	68
MAX SPEED								
Fan Power Input	(1)	W	27,1	39,1	62,9	76,6	105	171
Air flow rate	(1)	m³/h	363	586	808	976	1351	1805
Total capacity in cooling mode	(1)	kW	2,00	3,38	4,36	5,68	7,50	8,76
Total Net Cooling Capacity	(1)(6)(7)	kW	1,97	3,34	4,30	5,60	7,40	8,59
Sensible capacity in cooling mode	(1)	kW	1,59	2,59	3,49	4,36	5,81	7,11
Net sensible cooling capacity	(1)(6)(7)	kW	1,56	2,56	3,43	4,28	5,71	6,93
Net latent power in cooling	(1)(6)(7)	kW	0,41	0,78	0,87	1,32	1,69	1,66
Max water flow	(1)	l/s	0,10	0,16	0,21	0,27	0,36	0,42
Pressure Drop in cooling mode	(1)	kPa	13	34	17	34	47	41
Total capacity (heating mode)	(2)	kW	2,40	3,68	5,09	6,53	8,51	9,82
Total Net Heating Capacity	(2)(6)	kW	2,43	3,72	5,16	6,60	8,61	9,99
Water flow in heating mode	(2)	l/s	0,12	0,18	0,25	0,32	0,41	0,47
Pressure drop in heating mode	(2)	kPa	16	41	20	31	53	53
Sound Pressure	(3)	dB(A)	48	51	53	54	56	60
Sound Power	(4)(7)	dB(A)	57	60	62	63	65	69
SIZE AND WEIGHT								
A	(5)	mm	545	745	945	1145	1345	1545
B	(5)	mm	215	215	215	215	215	215
H	(5)	mm	450	450	450	450	450	450
Operating weight	(5)	kg	12	15	21	25	29	34

Notes:
1 Room temperature 27 °C d.b./19 °C w.b.; Chilled water (in/out) 7/12 °C.
2 Room temperature 20 °C d.b.; Hot water (in/out) 45/40 °C
3 Sound pressure level in free field on a reflective surface, 1 m from fan front and 1 m from the ground. Non -binding value obtained fron sound power level.
4 Sound power on the basis of measurements made in compliance with ISO 3741 and Eurovent 8/2.
5 Unit in standard configuration/execution, without optional accessories.
6 Values in compliance with EN14511-3:2013.
7 Values in compliance with [REGULATION (EU) N. 2016/2281]
Certified data in EUROVENT

i-LIFE2 HP DFIV/DLIV			0204	0404	0604	0804	1004	1204
ELECTRICAL DATA								
Power supply		V/ph/Hz	230/1/50	230/1/50	230/1/50	230/1/50	230/1/50	230/1/50
4 PIPES SYSTEM CONFIGURATION								
ENERGY EFFICIENCY								
COOLING (EN14511 VALUE)								
FCEER	(1)(6)	kW/kW	125	122	124	120	136	110
FCEER Class			B	B	B	B	B	C
HEATING ONLY (EN14511 VALUE)								
FCCOP	(2)(6)	kW/kW	104	99	110	103	116	91
FCCOP Class			C	D	C	C	C	D
PERFORMANCE								
MIN SPEED								
Fan Power Input	(1)	W	6,81	11,2	10,9	11,9	17,4	22,4
Air flow rate	(1)	m³/h	176	242	289	318	536	811
Total capacity in cooling mode	(1)	kW	1,00	1,50	1,95	2,35	3,23	4,65
Total Net Cooling Capacity	(1)(6)(7)	kW	0,99	1,49	1,94	2,33	3,22	4,63
Sensible capacity in cooling mode	(1)	kW	0,79	1,16	1,50	1,83	2,44	4,27
Net sensible cooling capacity	(1)(6)(7)	kW	0,78	1,15	1,49	1,82	2,42	4,25
Net latent power in cooling	(1)(6)(7)	kW	0,21	0,34	0,45	0,52	0,80	0,38
Max water flow	(1)	l/s	0,05	0,07	0,09	0,11	0,15	0,22
Pressure Drop in cooling mode	(1)	kPa	3	7	3	6	9	12
Total capacity (heating mode)	(2)	kW	0,69	1,01	1,43	1,66	2,27	3,07
Total Net Heating Capacity	(2)(6)	kW	0,70	1,03	1,45	1,67	2,28	3,09
Water flow in heating mode	(2)	l/s	0,02	0,02	0,03	0,04	0,06	0,07
Pressure drop in heating mode	(2)	kPa	2	3	6	2	4	11
Sound Pressure	(3)	dB(A)	30	33	33	34	37	57
Sound Power	(4)(7)	dB(A)	40	42	42	43	46	66
MED SPEED								
Fan Power Input	(1)	W	13,1	17,1	25,4	40,3	43,1	97,3
Air flow rate	(1)	m³/h	262	377	548	755	917	1437
Total capacity in cooling mode	(1)	kW	1,45	2,29	3,01	4,48	5,38	7,55
Total Net Cooling Capacity	(1)(6)(7)	kW	1,44	2,28	2,99	4,44	5,34	7,45
Sensible capacity in cooling mode	(1)	kW	1,14	1,74	2,39	3,42	4,13	6,35
Net sensible cooling capacity	(1)(6)(7)	kW	1,13	1,72	2,36	3,38	4,09	6,25
Net latent power in cooling	(1)(6)(7)	kW	0,30	0,56	0,63	1,06	1,26	1,20
Max water flow	(1)	l/s	0,07	0,11	0,14	0,21	0,26	0,36
Pressure Drop in cooling mode	(1)	kPa	7	16	8	21	24	31
Total capacity (heating mode)	(2)	kW	1,00	1,56	2,20	3,16	3,78	5,03
Total Net Heating Capacity	(2)(6)	kW	1,02	1,57	2,23	3,20	3,82	5,13
Water flow in heating mode	(2)	l/s	0,02	0,04	0,05	0,08	0,09	0,12
Pressure drop in heating mode	(2)	kPa	4	6	12	8	9	27
Sound Pressure	(3)	dB(A)	38	42	44	45	46	59
Sound Power	(4)(7)	dB(A)	47	51	53	54	56	68
MAX SPEED								
Fan Power Input	(1)	W	27,1	39,1	62,9	76,6	105	171
Air flow rate	(1)	m³/h	363	586	808	976	1351	1805
Total capacity in cooling mode	(1)	kW	2,00	3,38	4,36	5,68	7,50	8,76
Total Net Cooling Capacity	(1)(6)(7)	kW	1,97	3,34	4,30	5,60	7,40	8,59
Sensible capacity in cooling mode	(1)	kW	1,59	2,59	3,49	4,36	5,81	7,11
Net sensible cooling capacity	(1)(6)(7)	kW	1,56	2,56	3,43	4,28	5,71	6,93
Net latent power in cooling	(1)(6)(7)	kW	0,41	0,78	0,87	1,32	1,69	1,66
Max water flow	(1)	l/s	0,10	0,16	0,21	0,27	0,36	0,42
Pressure Drop in cooling mode	(1)	kPa	13	34	17	34	47	41
Total capacity (heating mode)	(2)	kW	1,39	2,28	3,20	4,00	5,27	5,84
Total Net Heating Capacity	(2)(6)	kW	1,42	2,32	3,26	4,08	5,37	6,01
Water flow in heating mode	(2)	l/s	0,03	0,06	0,08	0,10	0,13	0,14
Pressure drop in heating mode	(2)	kPa	8	13	25	13	17	36
Sound Pressure	(3)	dB(A)	48	51	53	54	56	60
Sound Power	(4)(7)	dB(A)	57	60	62	63	65	69
SIZE AND WEIGHT								
A	(5)	mm	450	650	850	1050	1250	1450
B	(5)	mm	215	215	215	215	215	215
H	(5)	mm	450	450	450	450	450	450
Operating weight	(5)	kg	12	15	22	25	29	35

Notes:
1 Room temperature 27°C d.b./18,9°C w.b., Chilled water (in/out) 7°C/12°C.
2 Room temperature 20 °C d.b., hot water (in/out) 65/55 °C
3 Sound pressure level in free field on a reflective surface, 1 m from fan front and 1 m from the ground. Non -binding value obtained fron sound power level.
4 Sound power on the basis of measurements made in compliance with ISO 3741 and Eurovent 8/2.
5 Unit in standard configuration/execution, without optional accessories.
6 Values in compliance with EN14511-3:2013.
7 Values in compliance with [REGULATION (EU) N. 2016/2281]
Certified data in EUROVENT

i-LIFE2 HP DFIO/DLIO			0204	0404	0604	0804	1004	1204
ELECTRICAL DATA								
Power supply		V/ph/Hz	230/1/50	230/1/50	230/1/50	230/1/50	230/1/50	230/1/50
4 PIPES SYSTEM CONFIGURATION								
ENERGY EFFICIENCY								
COOLING (EN14511 VALUE)								
FCEER	(1)(6)	kW/kW	125	122	124	120	136	110
FCEER Class			B	B	B	B	B	C
HEATING ONLY (EN14511 VALUE)								
FCCOP	(2)(6)	kW/kW	104	99	110	103	116	91
FCCOP Class			C	D	C	C	C	D
PERFORMANCE								
MIN SPEED								
Fan Power Input	(1)	W	6,81	11,2	10,9	11,9	17,4	22,4
Air flow rate	(1)	m³/h	176	242	289	318	536	811
Total capacity in cooling mode	(1)	kW	1,00	1,50	1,95	2,35	3,23	4,65
Total Net Cooling Capacity	(1)(6)(7)	kW	0,99	1,49	1,94	2,33	3,22	4,63
Sensible capacity in cooling mode	(1)	kW	0,79	1,16	1,50	1,83	2,44	4,27
Net sensible cooling capacity	(1)(6)(7)	kW	0,78	1,15	1,49	1,82	2,42	4,25
Net latent power in cooling	(1)(6)(7)	kW	0,21	0,34	0,45	0,52	0,80	0,38
Max water flow	(1)	l/s	0,05	0,07	0,09	0,11	0,15	0,22
Pressure Drop in cooling mode	(1)	kPa	3	7	3	6	9	12
Total capacity (heating mode)	(2)	kW	0,69	1,01	1,43	1,66	2,27	3,07
Total Net Heating Capacity	(2)(6)	kW	0,70	1,03	1,45	1,67	2,28	3,09
Water flow in heating mode	(2)	l/s	0,02	0,02	0,03	0,04	0,06	0,07
Pressure drop in heating mode	(2)	kPa	2	3	6	2	4	11
Sound Pressure	(3)	dB(A)	30	33	33	34	37	57
Sound Power	(4)(7)	dB(A)	40	42	42	43	46	66
MED SPEED								
Fan Power Input	(1)	W	13,1	17,1	25,4	40,3	43,1	97,3
Air flow rate	(1)	m³/h	262	377	548	755	917	1437
Total capacity in cooling mode	(1)	kW	1,45	2,29	3,01	4,48	5,38	7,55
Total Net Cooling Capacity	(1)(6)(7)	kW	1,44	2,28	2,99	4,44	5,34	7,45
Sensible capacity in cooling mode	(1)	kW	1,14	1,74	2,39	3,42	4,13	6,35
Net sensible cooling capacity	(1)(6)(7)	kW	1,13	1,72	2,36	3,38	4,09	6,25
Net latent power in cooling	(1)(6)(7)	kW	0,30	0,56	0,63	1,06	1,26	1,20
Max water flow	(1)	l/s	0,07	0,11	0,14	0,21	0,26	0,36
Pressure Drop in cooling mode	(1)	kPa	7	16	8	21	24	31
Total capacity (heating mode)	(2)	kW	1,00	1,56	2,20	3,16	3,78	5,03
Total Net Heating Capacity	(2)(6)	kW	1,02	1,57	2,23	3,20	3,82	5,13
Water flow in heating mode	(2)	l/s	0,02	0,04	0,05	0,08	0,09	0,12
Pressure drop in heating mode	(2)	kPa	4	6	12	8	9	27
Sound Pressure	(3)	dB(A)	38	42	44	45	46	59
Sound Power	(4)(7)	dB(A)	47	51	53	54	56	68
MAX SPEED								
Fan Power Input	(1)	W	27,1	39,1	62,9	76,6	105	171
Air flow rate	(1)	m³/h	363	586	808	976	1351	1805
Total capacity in cooling mode	(1)	kW	2,00	3,38	4,36	5,68	7,50	8,76
Total Net Cooling Capacity	(1)(6)(7)	kW	1,97	3,34	4,30	5,60	7,40	8,59
Sensible capacity in cooling mode	(1)	kW	1,59	2,59	3,49	4,36	5,81	7,11
Net sensible cooling capacity	(1)(6)(7)	kW	1,56	2,56	3,43	4,28	5,71	6,93
Net latent power in cooling	(1)(6)(7)	kW	0,41	0,78	0,87	1,32	1,69	1,66
Max water flow	(1)	l/s	0,10	0,16	0,21	0,27	0,36	0,42
Pressure Drop in cooling mode	(1)	kPa	13	34	17	34	47	41
Total capacity (heating mode)	(2)	kW	1,39	2,28	3,20	4,00	5,27	5,84
Total Net Heating Capacity	(2)(6)	kW	1,42	2,32	3,26	4,08	5,37	6,01
Water flow in heating mode	(2)	l/s	0,03	0,06	0,08	0,10	0,13	0,14
Pressure drop in heating mode	(2)	kPa	8	13	25	13	17	36
Sound Pressure	(3)	dB(A)	48	51	53	54	56	60
Sound Power	(4)(7)	dB(A)	57	60	62	63	65	69
SIZE AND WEIGHT								
A	(5)	mm	545	745	945	1145	1345	1545
B	(5)	mm	215	215	215	215	215	215
H	(5)	mm	450	450	450	450	450	450
Operating weight	(5)	kg	12	16	22	26	30	36

Notes:
1 Room temperature 27°C d.b./18,9°C w.b., Chilled water (in/out) 7°C/12°C.
2 Room temperature 20 °C d.b., hot water (in/out) 65/55 °C
3 Sound pressure level in free field on a reflective surface, 1 m from fan front and 1 m from the ground. Non -binding value obtained fron sound power level.
4 Sound power on the basis of measurements made in compliance with ISO 3741 and Eurovent 8/2.
5 Unit in standard configuration/execution, without optional accessories.
6 Values in compliance with EN14511-3:2013.
7 Values in compliance with [REGULATION (EU) N. 2016/2281]
Certified data in EUROVENT

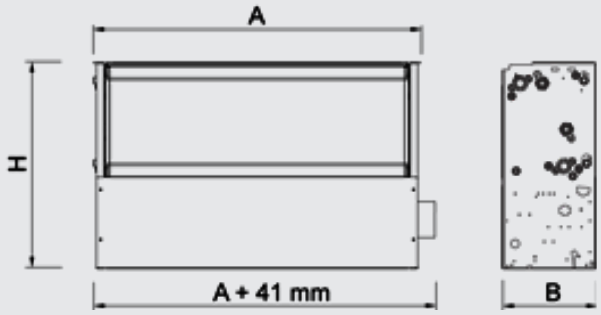
A
H
A + 41 mm
B

HYDRONIC TERMINALS

i-LIFE2 SLIM 080 - 370

Residential fan-coils with cabinet or concealed version, with inverter motor e tangential fan. 0,76-3,76 kW



Version

DLIU	Built-in version for universal installation.
DLMO	Version with cabinet for horizontal installation
DLMV	Version with cabinet for vertical installation
DLRV	Radiant Version with cabinet for vertical installation.

Features

DC motor with inverter technology with continuous speed regulation, to ensure the best performance with a very low noise level.

Elegant design and reduced depth of only 13 cm, for installation in a residential enviroment.

Coil with large frontal area that allows to reach high air flow with very low pressure drop.

Honeycomb polypropylene air filter which can be regenerated by washing or blowing.

Tangential fan with asymetric blades that ensures the continuous modulation of the air flow for a better comfort and real energy savings.

Elegant cover structure that integrates the use of high quality plastic materials, with traditional galvanized and epoxy powder coated materials.

Accessory

- Casing for build in version - i-LIFE2 Slim Box
- Pair of decorative and structural feet
- Alluminium air flow vent for wall mounting
- Main coil 2-way/3-way valve unit
- Telescopic air flow duct and 90° duct for false ceiling and build in installation
- Eurokonus adapter
- Alluminium Air intake grid
- Drain Pan for horizontal installation
- UVC air sterilisation device
- Casing cover panel with frame and front panel grid
- Fitting for air intake in built-in installation

i-LIFE2 SLIM is the new fan coil Climaveneta, with inverter technology for heating, cooling and dehumidifying. Its elegant design with only 13 cm depth makes i-LIFE2 Slim the perfect solution for residential applications. The fan coil is also available with inverter version with radiant panel.
The brushless motor allows a perfect adaptation to thermal load, without any temperature fluctuations. Tangential fans operate through continuous air flow modulation, with no speed steps or relay switching as traditional fan coil units. High efficiency is guaranteed in any HVAC installation setup, in combination with any low temperature heat generator.

Controls

iKS2 - on board Control

On-board control for unit with cabinet complete with touch keypad with 8 touch key, LCD display with colored symbols. Modulating fan speed with PID logic, temperature regulation, winter/summer mode, automatic mode for the speed regulation, night mode for a silent operation. Minimum water probe and solenoid management, it's possible to manage the function even without the water probe.

ATS2 - Control with 4 speed regulation

Controller for units with cabinet. Interface with 8 keys for the temperature selection, winter/summer mode, 4 speed regulation, (Max. Min. Night and Auto) with display for room temperature vizualization. Minimum water temperature probe and solenoid valve management. It's possible to manage the function even without the water probe.

iKS2 - on board Control

On-board control for unit with cabinet complete with touch keypad with 8 touch key, LCD display with colored symbols. Modulating fan speed with PID logic, temperature regulation, winter/summer mode, automatic mode for the speed regulation, night mode for a silent operation. Minimum water probe and solenoid management, it's possible to manage the function even without the water probe.

Remote Control iKSW2

Remote control for built-in and with cabinet units complete with touch keypad with 8 touch keys, LCD display with colored symbols. Modulating fan speed with PID logic, temperature regulation, winter/summer mode, automatic mode for the speed regulation, night mode for a silent operation. Minimum water probe and solenoid valve management. A maximum of 31 fancoils can be connected to the iKSW control for open space rooms. Each unit must have the iHBS2 powerboard installed. RS485 output for connection in BMS.

iHBS2 - On board semplified Control

Simple on board control for buit - in and with cabinet units, to be coupled with remote control iKSW2. iHBS2 control has a LED for the visualization of the device's operation. All the parameters are set up from iKSW2. It is possible to manage the function even without the water probe. The iHBS2 powerboard is able to supply power to IKSW2 control.

HBS2 Control - Powerboard card

Semple on board control for built-in units or with cabinet units, to be coupled with ATW Climaveneta remote control or other remote controls which manage the regulation of fixed fan speeds. HBS2 has a a LED for the visualization of the devise's operation. All the parameters are set up from the remote control. There are 2 versions of this powerboard. Version for ON/OFF signal (HBS2) and version for 0-10V signal (HBS2010)

i-LIFE2 SLIM / DLMO - DLMV			080	170	270	320	370
ELECTRICAL DATA							
Power supply		V/ph/Hz	230/1/50	230/1/50	230/1/50	230/1/50	230/1/50
2 PIPES SYSTEM CONFIGURATION							
ENERGY EFFICIENCY							
COOLING (EN14511 VALUE)							
FCEER	(1)(6)	kW/kW	150	197	320	294	275
FCEER Class			B	A	A	A	A
HEATING ONLY (EN14511 VALUE)							
FCCOP	(2)(6)	kW/kW	183	262	387	401	346
FCCOP Class			B	B	A	A	A
PERFORMANCE							
MIN SPEED							
Fan Power Input	(1)	W	0,70	1,62	1,82	2,47	4,91
Air flow rate	(1)	m³/h	51	122	189	258	367
Total capacity in cooling mode	(1)	kW	0,40	0,81	1,32	1,62	2,00
Total Net Cooling Capacity	(1)(6)(7)	kW	0,40	0,81	1,32	1,62	2,00
Sensible capacity in cooling mode	(1)	kW	0,30	0,67	1,03	1,38	1,71
Net sensible cooling capacity	(1)(6)(7)	kW	0,30	0,67	1,03	1,38	1,70
Net latent power in cooling	(1)(6)(7)	kW	0,10	0,14	0,29	0,24	0,30
Max water flow	(1)	l/s	0,02	0,04	0,06	0,08	0,10
Pressure Drop in cooling mode	(1)	kPa	2	1	6	5	6
Total capacity (heating mode)	(2)	kW	0,50	1,06	1,54	2,22	2,48
Total Net Heating Capacity	(2)(6)	kW	0,50	1,06	1,54	2,22	2,48
Water flow in heating mode	(2)	l/s	0,02	0,05	0,07	0,11	0,12
Pressure drop in heating mode	(2)	kPa	3	2	8	9	10
Sound Pressure	(3)	dB(A)	24	26	27	27	31
Sound Power	(4)(7)	dB(A)	33	35	36	36	40
MED SPEED							
Fan Power Input	(1)	W	4,46	10,1	9,86	11,3	12,3
Air flow rate	(1)	m³/h	93	221	334	430	499
Total capacity in cooling mode	(1)	kW	0,69	1,39	2,18	2,52	2,82
Total Net Cooling Capacity	(1)(6)(7)	kW	0,69	1,38	2,17	2,51	2,81
Sensible capacity in cooling mode	(1)	kW	0,54	1,17	1,72	2,24	2,40
Net sensible cooling capacity	(1)(6)(7)	kW	0,54	1,16	1,71	2,23	2,39
Net latent power in cooling	(1)(6)(7)	kW	0,15	0,22	0,46	0,28	0,42
Max water flow	(1)	l/s	0,03	0,07	0,10	0,12	0,14
Pressure Drop in cooling mode	(1)	kPa	5	3	15	11	13
Total capacity (heating mode)	(2)	kW	0,78	1,65	2,40	3,07	3,41
Total Net Heating Capacity	(2)(6)	kW	0,78	1,66	2,41	3,08	3,43
Water flow in heating mode	(2)	l/s	0,04	0,08	0,12	0,15	0,16
Pressure drop in heating mode	(2)	kPa	6	5	19	16	20
Sound Pressure	(3)	dB(A)	35	36	37	38	39
Sound Power	(4)(7)	dB(A)	44	45	46	47	48
MAX SPEED							
Fan Power Input	(1)	W	10,7	19,0	20,0	29,0	33,0
Air flow rate	(1)	m³/h	125	277	425	593	697
Total capacity in cooling mode	(1)	kW	0,76	1,75	2,75	3,22	3,76
Total Net Cooling Capacity	(1)(6)(7)	kW	0,75	1,73	2,73	3,19	3,73
Sensible capacity in cooling mode	(1)	kW	0,66	1,53	2,21	3,02	3,30
Net sensible cooling capacity	(1)(6)(7)	kW	0,65	1,51	2,19	2,99	3,27
Net latent power in cooling	(1)(6)(7)	kW	0,10	0,22	0,54	0,20	0,46
Max water flow	(1)	l/s	0,04	0,08	0,13	0,15	0,18
Pressure Drop in cooling mode	(1)	kPa	6	5	24	17	24
Total capacity (heating mode)	(2)	kW	0,88	2,11	3,27	3,88	4,33
Total Net Heating Capacity	(2)(6)	kW	0,89	2,13	3,29	3,91	4,36
Water flow in heating mode	(2)	l/s	0,04	0,10	0,16	0,19	0,21
Pressure drop in heating mode	(2)	kPa	8	8	33	25	32
Sound Pressure	(3)	dB(A)	41	42	44	46	47
Sound Power	(4)(7)	dB(A)	50	51	53	55	56
SIZE AND WEIGHT							
A	(5)	mm	737	937	1137	1337	1537
B	(5)	mm	131	131	131	131	131
H	(5)	mm	579	579	579	579	579
Operating weight	(5)	kg	17	20	23	26	29

Notes:
1 Room temperature 27 °C d.b./19 °C w.b.; Chilled water (in/out) 7/12 °C.
2 Room temperature 20 °C d.b.; Hot water (in/out) 45/40 °C
3 Sound pressure level in free field on a reflective surface, 1 m from fan front and 1 m from the ground. Non -binding value obtained fron sound power level.
4 Sound power on the basis of measurements made in compliance with ISO 3741 and Eurovent 8/2.
5 Unit in standard configuration/execution, without optional accessories.
6 Values in compliance with EN14511-3:2013.
7 Values in compliance with [REGULATION (EU) N. 2016/2281]
Certified data in EUROVENT

i-LIFE2 SLIM / DLIU			080	170	270	320	370
ELECTRICAL DATA							
Power supply		V/ph/Hz	230/1/50	230/1/50	230/1/50	230/1/50	230/1/50
2 PIPES SYSTEM CONFIGURATION							
ENERGY EFFICIENCY							
COOLING (EN14511 VALUE)							
FCEER	(1)(6)	kW/kW	150	197	320	294	275
FCEER Class			B	A	A	A	A
HEATING ONLY (EN14511 VALUE)							
FCCOP	(2)(6)	kW/kW	183	262	387	401	346
FCCOP Class			B	B	A	A	A
PERFORMANCE							
MIN SPEED							
Fan Power Input	(1)	W	0,70	1,62	1,82	2,47	4,91
Air flow rate	(1)	m³/h	51	122	189	258	367
Total capacity in cooling mode	(1)	kW	0,40	0,81	1,32	1,62	2,00
Total Net Cooling Capacity	(1)(6)(7)	kW	0,40	0,81	1,32	1,62	2,00
Sensible capacity in cooling mode	(1)	kW	0,30	0,67	1,03	1,38	1,71
Net sensible cooling capacity	(1)(6)(7)	kW	0,30	0,67	1,03	1,38	1,70
Net latent power in cooling	(1)(6)(7)	kW	0,10	0,14	0,29	0,24	0,30
Max water flow	(1)	l/s	0,02	0,04	0,06	0,08	0,10
Pressure Drop in cooling mode	(1)	kPa	2	1	6	5	6
Total capacity (heating mode)	(2)	kW	0,50	1,06	1,54	2,22	2,48
Total Net Heating Capacity	(2)(6)	kW	0,50	1,06	1,54	2,22	2,48
Water flow in heating mode	(2)	l/s	0,02	0,05	0,07	0,11	0,12
Pressure drop in heating mode	(2)	kPa	3	2	8	9	10
Sound Pressure	(3)	dB(A)	24	26	27	27	31
Sound Power	(4)(7)	dB(A)	33	35	36	36	40
MED SPEED							
Fan Power Input	(1)	W	4,46	10,1	9,86	11,3	12,3
Air flow rate	(1)	m³/h	93	221	334	430	499
Total capacity in cooling mode	(1)	kW	0,69	1,39	2,18	2,52	2,82
Total Net Cooling Capacity	(1)(6)(7)	kW	0,69	1,38	2,17	2,51	2,81
Sensible capacity in cooling mode	(1)	kW	0,54	1,17	1,72	2,24	2,40
Net sensible cooling capacity	(1)(6)(7)	kW	0,54	1,16	1,71	2,23	2,39
Net latent power in cooling	(1)(6)(7)	kW	0,15	0,22	0,46	0,28	0,42
Max water flow	(1)	l/s	0,03	0,07	0,10	0,12	0,14
Pressure Drop in cooling mode	(1)	kPa	5	3	15	11	13
Total capacity (heating mode)	(2)	kW	0,78	1,65	2,40	3,07	3,41
Total Net Heating Capacity	(2)(6)	kW	0,78	1,66	2,41	3,08	3,43
Water flow in heating mode	(2)	l/s	0,04	0,08	0,12	0,15	0,16
Pressure drop in heating mode	(2)	kPa	6	5	19	16	20
Sound Pressure	(3)	dB(A)	35	36	37	38	39
Sound Power	(4)(7)	dB(A)	44	45	46	47	48
MAX SPEED							
Fan Power Input	(1)	W	10,7	19,0	20,0	29,0	33,0
Air flow rate	(1)	m³/h	125	277	425	593	697
Total capacity in cooling mode	(1)	kW	0,76	1,75	2,75	3,22	3,76
Total Net Cooling Capacity	(1)(6)(7)	kW	0,75	1,73	2,73	3,19	3,73
Sensible capacity in cooling mode	(1)	kW	0,66	1,53	2,21	3,02	3,30
Net sensible cooling capacity	(1)(6)(7)	kW	0,65	1,51	2,19	2,99	3,27
Net latent power in cooling	(1)(6)(7)	kW	0,10	0,22	0,54	0,20	0,46
Max water flow	(1)	l/s	0,04	0,08	0,13	0,15	0,18
Pressure Drop in cooling mode	(1)	kPa	6	5	24	17	24
Total capacity (heating mode)	(2)	kW	0,88	2,11	3,27	3,88	4,33
Total Net Heating Capacity	(2)(6)	kW	0,89	2,13	3,29	3,91	4,36
Water flow in heating mode	(2)	l/s	0,04	0,10	0,16	0,19	0,21
Pressure drop in heating mode	(2)	kPa	8	8	33	25	32
Sound Pressure	(3)	dB(A)	41	42	44	46	47
Sound Power	(4)(7)	dB(A)	50	51	53	55	56
SIZE AND WEIGHT							
A	(5)	mm	525	725	925	1125	1325
B	(5)	mm	126	126	126	126	126
H	(5)	mm	576	576	576	576	576
Operating weight	(5)	kg	9	12	15	18	21

Notes:
1 Room temperature 27 °C d.b./19 °C w.b.; Chilled water (in/out) 7/12 °C.
2 Room temperature 20 °C d.b.; Hot water (in/out) 45/40 °C
3 Sound pressure level in free field on a reflective surface, 1 m from fan front and 1 m from the ground. Non -binding value obtained fron sound power level.
4 Sound power on the basis of measurements made in compliance with ISO 3741 and Eurovent 8/2.
5 Unit in standard configuration/execution, without optional accessories.
6 Values in compliance with EN14511-3:2013.
7 Values in compliance with [REGULATION (EU) N. 2016/2281]
Certified data in EUROVENT

i-LIFE2 SLIM / DLRV			080	170	270	320	370
ELECTRICAL DATA							
Power supply		V/ph/Hz	230/1/50	230/1/50	230/1/50	230/1/50	230/1/50
2 PIPES SYSTEM CONFIGURATION							
ENERGY EFFICIENCY							
COOLING (EN14511 VALUE)							
FCEER	(1)(6)	kW/kW	150	197	320	294	275
FCEER Class			B	A	A	A	A
HEATING ONLY (EN14511 VALUE)							
FCCOP	(2)(6)	kW/kW	183	262	387	401	346
FCCOP Class			B	B	A	A	A
PERFORMANCE							
MIN SPEED							
Fan Power Input	(1)	W	0,70	1,62	1,82	2,47	4,91
Air flow rate	(1)	m³/h	51	122	189	258	367
Total capacity in cooling mode	(1)	kW	0,40	0,81	1,32	1,62	2,00
Total Net Cooling Capacity	(1)(6)(7)	kW	0,40	0,81	1,32	1,62	2,00
Sensible capacity in cooling mode	(1)	kW	0,30	0,67	1,03	1,38	1,71
Net sensible cooling capacity	(1)(6)(7)	kW	0,30	0,67	1,03	1,38	1,70
Net latent power in cooling	(1)(6)(7)	kW	0,10	0,14	0,29	0,24	0,30
Max water flow	(1)	l/s	0,02	0,04	0,06	0,08	0,10
Pressure Drop in cooling mode	(1)	kPa	2	1	6	5	6
Total capacity (heating mode)	(2)	kW	0,50	1,06	1,54	2,22	2,48
Total Net Heating Capacity	(2)(6)	kW	0,50	1,06	1,54	2,22	2,48
Water flow in heating mode	(2)	l/s	0,02	0,05	0,07	0,11	0,12
Pressure drop in heating mode	(2)	kPa	3	2	8	9	10
Sound Pressure	(3)	dB(A)	24	26	27	27	31
Sound Power	(4)(7)	dB(A)	33	35	36	36	40
MED SPEED							
Fan Power Input	(1)	W	4,46	10,1	9,86	11,3	12,3
Air flow rate	(1)	m³/h	93	221	334	430	499
Total capacity in cooling mode	(1)	kW	0,69	1,39	2,18	2,52	2,82
Total Net Cooling Capacity	(1)(6)(7)	kW	0,69	1,38	2,17	2,51	2,81
Sensible capacity in cooling mode	(1)	kW	0,54	1,17	1,72	2,24	2,40
Net sensible cooling capacity	(1)(6)(7)	kW	0,54	1,16	1,71	2,23	2,39
Net latent power in cooling	(1)(6)(7)	kW	0,15	0,22	0,46	0,28	0,42
Max water flow	(1)	l/s	0,03	0,07	0,10	0,12	0,14
Pressure Drop in cooling mode	(1)	kPa	5	3	15	11	13
Total capacity (heating mode)	(2)	kW	0,78	1,65	2,40	3,07	3,41
Total Net Heating Capacity	(2)(6)	kW	0,78	1,66	2,41	3,08	3,43
Water flow in heating mode	(2)	l/s	0,04	0,08	0,12	0,15	0,16
Pressure drop in heating mode	(2)	kPa	6	5	19	16	20
Sound Pressure	(3)	dB(A)	35	36	37	38	39
Sound Power	(4)(7)	dB(A)	44	45	46	47	48
MAX SPEED							
Fan Power Input	(1)	W	10,7	19,0	20,0	29,0	33,0
Air flow rate	(1)	m³/h	125	277	425	593	697
Total capacity in cooling mode	(1)	kW	0,76	1,75	2,75	3,22	3,76
Total Net Cooling Capacity	(1)(6)(7)	kW	0,75	1,73	2,73	3,19	3,73
Sensible capacity in cooling mode	(1)	kW	0,66	1,53	2,21	3,02	3,30
Net sensible cooling capacity	(1)(6)(7)	kW	0,65	1,51	2,19	2,99	3,27
Net latent power in cooling	(1)(6)(7)	kW	0,10	0,22	0,54	0,20	0,46
Max water flow	(1)	l/s	0,04	0,08	0,13	0,15	0,18
Pressure Drop in cooling mode	(1)	kPa	6	5	24	17	24
Total capacity (heating mode)	(2)	kW	0,88	2,11	3,27	3,88	4,33
Total Net Heating Capacity	(2)(6)	kW	0,89	2,13	3,29	3,91	4,36
Water flow in heating mode	(2)	l/s	0,04	0,10	0,16	0,19	0,21
Pressure drop in heating mode	(2)	kPa	8	8	33	25	32
Sound Pressure	(3)	dB(A)	41	42	44	46	47
Sound Power	(4)(7)	dB(A)	50	51	53	55	56
SIZE AND WEIGHT							
A	(5)	mm	737	937	1137	1337	1537
B	(5)	mm	131	131	131	131	131
H	(5)	mm	579	579	579	579	579
Operating weight	(5)	kg	17	20	23	26	29

Notes:
1 Room temperature 27 °C d.b./19 °C w.b.; Chilled water (in/out) 7/12 °C.
2 Room temperature 20 °C d.b.; Hot water (in/out) 45/40 °C
3 Sound pressure level in free field on a reflective surface, 1 m from fan front and 1 m from the ground. Non -binding value obtained fron sound power level.
4 Sound power on the basis of measurements made in compliance with ISO 3741 and Eurovent 8/2.
5 Unit in standard configuration/execution, without optional accessories.
6 Values in compliance with EN14511-3:2013.
7 Values in compliance with [REGULATION (EU) N. 2016/2281]
Certified data in EUROVENT

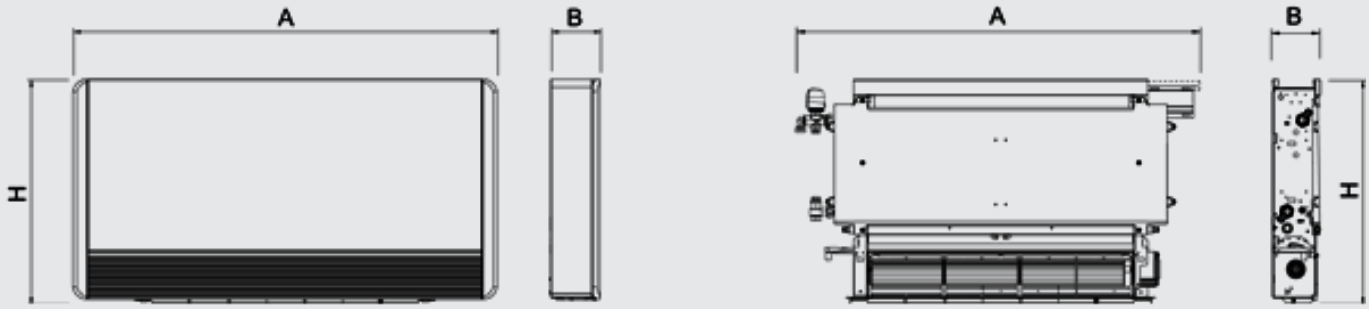
A
B
H
A
B
H

HYDRONIC TERMINALS

MHD2 30 - 60

High - Wall type Terminal
2,15-4,63 kW



MHD2 belongs to hi-wall fan-coils of Climaveneta. The compactness of this model and its exclusive elegance soften the visual impact and make it ideal for residential and small tertiary installations.

Version

- Base Version

Features

Fan coil in ABS with high mechanical characteristics and resistance to ageing;
Adjustable air flow direction;
Arrangement for right-left condensate drain pipe;
Management of all functions by remote control
Removable panel;

Accessory

- Frame kit
- Solenoid valve 2 ways 1/2"
- Solenoid valve kit 3 ways, 4 fits 1/2" with frame
- Condensate drain pump

Controls

Remote control
In combination with (i)HB powerboard on board of the units, it's possible to have Set-point regulation, selection of functioning mode (cool, heat, dehumidify, fan), and fan speed (Max, Med, Min, AUTO). User-sfriendly compact remote control with fine aethetics.

MHD2			30	40	50	60
ELECTRICAL DATA						
Power supply		V/ph/Hz	230/1/50	230/1/50	230/1/50	230/1/50
2 PIPES SYSTEM CONFIGURATION						
ENERGY EFFICIENCY						
COOLING (EN14511 VALUE)						
FCEER	(1)(6)	kW/kW	74	81	82	92
FCEER Class			D	C	C	C
HEATING ONLY (EN14511 VALUE)						
FCCOP	(2)(6)	kW/kW	86	98	98	101
FCCOP Class			D	D	D	C
PERFORMANCE						
MIN SPEED						
Fan Power Input	(1)	W	23,0	22,0	33,0	37,0
Air flow rate	(1)	m³/h	334	403	570	697
Total capacity in cooling mode	(1)	kW	1,65	1,78	2,67	3,36
Total Net Cooling Capacity	(1)(6)(7)	kW	1,63	1,76	2,64	3,32
Sensible capacity in cooling mode	(1)	kW	1,33	1,45	2,13	2,58
Net sensible cooling capacity	(1)(6)(7)	kW	1,31	1,43	2,10	2,54
Net latent power in cooling	(1)(6)(7)	kW	0,32	0,33	0,54	0,78
Max water flow	(1)	l/s	0,08	0,09	0,13	0,16
Pressure Drop in cooling mode	(1)	kPa	10	9	22	31
Total capacity (heating mode)	(2)	kW	1,56	1,75	2,63	2,97
Total Net Heating Capacity	(2)(6)	kW	1,58	1,77	2,67	3,01
Water flow in heating mode	(2)	l/s	0,08	0,08	0,13	0,14
Pressure drop in heating mode	(2)	kPa	9	9	22	26
Sound Pressure	(3)	dB(A)	27	28	37	42
Sound Power	(4)(7)	dB(A)	38	39	48	53
MED SPEED						
Fan Power Input	(1)	W	25,0	25,0	37,0	41,0
Air flow rate	(1)	m³/h	376	522	691	810
Total capacity in cooling mode	(1)	kW	1,85	1,89	3,00	3,86
Total Net Cooling Capacity	(1)(6)(7)	kW	1,83	1,87	2,96	3,82
Sensible capacity in cooling mode	(1)	kW	1,50	1,62	2,57	2,97
Net sensible cooling capacity	(1)(6)(7)	kW	1,48	1,60	2,53	2,93
Net latent power in cooling	(1)(6)(7)	kW	0,35	0,27	0,43	0,89
Max water flow	(1)	l/s	0,09	0,09	0,14	0,18
Pressure Drop in cooling mode	(1)	kPa	11	10	26	38
Total capacity (heating mode)	(2)	kW	1,77	1,96	2,98	3,46
Total Net Heating Capacity	(2)(6)	kW	1,80	1,99	3,02	3,50
Water flow in heating mode	(2)	l/s	0,09	0,09	0,14	0,17
Pressure drop in heating mode	(2)	kPa	10	10	26	33
Sound Pressure	(3)	dB(A)	31	34	41	45
Sound Power	(4)(7)	dB(A)	42	45	52	56
MAX SPEED						
Fan Power Input	(1)	W	27,0	28,0	40,0	50,0
Air flow rate	(1)	m³/h	436	632	780	920
Total capacity in cooling mode	(1)	kW	2,15	2,67	4,00	4,63
Total Net Cooling Capacity	(1)(6)(7)	kW	2,12	2,64	3,96	4,58
Sensible capacity in cooling mode	(1)	kW	1,71	2,13	3,02	3,56
Net sensible cooling capacity	(1)(6)(7)	kW	1,68	2,10	2,98	3,51
Net latent power in cooling	(1)(6)(7)	kW	0,44	0,54	0,98	1,07
Max water flow	(1)	l/s	0,10	0,13	0,19	0,22
Pressure Drop in cooling mode	(1)	kPa	12	15	39	50
Total capacity (heating mode)	(2)	kW	2,01	2,62	3,39	4,12
Total Net Heating Capacity	(2)(6)	kW	2,04	2,65	3,43	4,17
Water flow in heating mode	(2)	l/s	0,10	0,13	0,16	0,20
Pressure drop in heating mode	(2)	kPa	12	15	31	42
Sound Pressure	(3)	dB(A)	34	41	44	49
Sound Power	(4)(7)	dB(A)	45	52	55	60
SIZE AND WEIGHT						
A	(5)	mm	845	845	920	920
B	(5)	mm	180	180	200	200
H	(5)	mm	270	270	298	298
Operating weight	(5)	kg	10	10	13	13

Notes:
1 Room temperature 27°C d.b./18,9°C w.b., Chilled water (in/out) 7°C/12°C.
2 Room temperature 20°C d.b., hot water (in/out) 45°C/40°C.
3 Sound pressure level in free field on a reflective surface, 1 m from fan front and 1 m from the ground. Non -binding value obtained fron sound power level.
4 Sound power on the basis of measurements made in compliance with ISO 3741 and Eurovent 8/2.
5 Unit in standard configuration/execution, without optional accessories.
6 Values in compliance with EN14511-3:2013.
7 Values in compliance with [REGULATION (EU) N. 2016/2281]
Certified data in EUROVENT

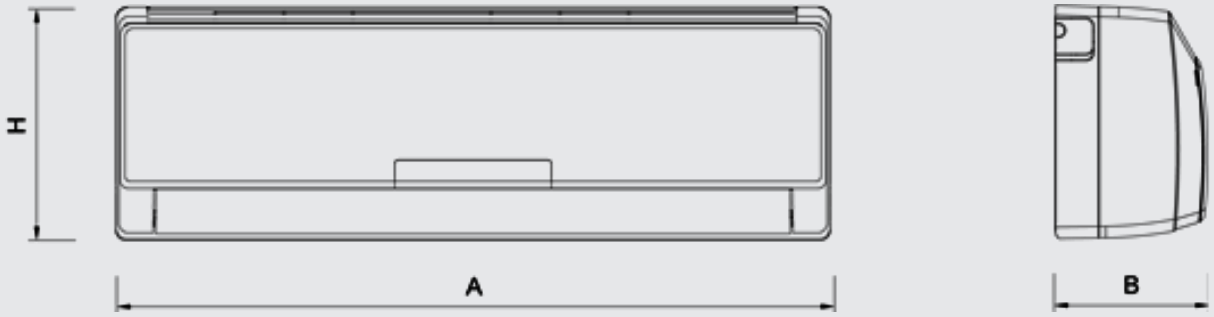
H
A
B

HYDRONIC TERMINALS

a-CHD 0606 - 2209

Cassette type terminal 3,20-11,3 kW



New a- CHD cassette of Climaveneta, with 5 speeds AC motor, is available in two version: for two pipe installation (unit with single coil) and for four pipe installation (unit with double coil). Wide range of sizes and easy installation make them suitable for all types of installations.

Version

U - 2T	2 Pipes version
U- 4T	4 Pipes Version

Features

Frame in galvanised steel insulated with self-extinguishing closed-cell polyethylene blanket of suitable thickness, to limit heat loss and noise to a minimum. Airflow grille in ABS built in the cassette, supplied in 1 cartonbox
5-speed electric motor inclusive of thermal switch. Fan
Low-rev radial-blade fan to maximise acoustic comfort.
Coil with corrugated aluminium fins and copper pipes, tested with dried air at 14 bar.
Switchboard with power and control terminal block with screw terminals
Set-up for fresh air intake.
Set-up for duct air distribution.
Esternal Drain Pan

Accessory

- Main coil 2-way/3-way valve unit
- Additional coil 2-way/3-way valve unit
- Fresh Air renewal connection
- Duct Connection Flange
- Kit Bus Adapter for BMS
- Kit Gateway interface for MyHome Bticino System

Controls

MTW wall mounted
Fan speed slider, mode slider (OFF/summer/winter). Thermostat with set point regulation. ON/OFF valve unit control (summer/winter for 2 pipes installation), ON/OFF second valve unit control (winter for 4 pipes installation). Room temperature probe. Remote water temperature probe.
ATW wall mounted
Mode button (OFF/summer/winter/AUTO), fan speed button (Max/Med/Min/AUTO). Thermostat with set point regulation. ON/OFF valve unit control (summer/winter for 2 and 4 pipes installation). Control of traditional or PWM modulating valve units. Room temperature probe and water temperature probe. Digital input configurable as: window contact, economy, heating or cooling remote changeover, periodic ventilation. Configuration dip switch. TTL serial port with Modbus protocol for installation in BMS.
Remote control
In combination with (i)HB powerboard on board of the units, it's possible to have Set-point regulation, selection of functioning mode (cool, heat, dehumidify, fan), and fan speed (Max, Med, Min, AUTO). User-sfriendly compact remote control with fine aethetics.

a-CHD			0606	0706	1108	2209
ELECTRICAL DATA						
Power supply		V/ph/Hz	230/1/50	230/1/50	230/1/50	230/1/50
2 PIPES SYSTEM CONFIGURATION						
ENERGY EFFICIENCY						
COOLING (EN14511 VALUE)						
FCEER	(1)(6)	kW/kW	57	73	65	49
FCEER Class			D	D	D	E
HEATING ONLY (EN14511 VALUE)						
FCCOP	(2)(6)	kW/kW	70	86	78	62
FCCOP Class			D	D	D	E
PERFORMANCE						
MIN SPEED						
Fan Power Input	(1)	W	23,0	35,0	56,0	128
Air flow rate	(1)	m³/h	200	450	700	1380
Total capacity in cooling mode	(1)	kW	1,38	2,80	4,22	7,49
Total Net Cooling Capacity	(1)(6)(7)	kW	1,36	2,77	4,17	7,37
Sensible capacity in cooling mode	(1)	kW	0,98	1,93	3,08	5,65
Net sensible cooling capacity	(1)(6)(7)	kW	0,96	1,90	3,02	5,53
Net latent power in cooling	(1)(6)(7)	kW	0,40	0,87	1,14	1,84
Max water flow	(1)	l/s	0,07	0,13	0,20	0,36
Pressure Drop in cooling mode	(1)	kPa	4	16	16	19
Total capacity (heating mode)	(2)	kW	1,30	2,85	4,20	7,75
Total Net Heating Capacity	(2)(6)	kW	1,32	2,88	4,25	7,88
Water flow in heating mode	(2)	l/s	0,06	0,14	0,20	0,37
Pressure drop in heating mode	(2)	kPa	4	17	16	20
Sound Pressure	(3)	dB(A)	31	32	40	47
Sound Power	(4)(7)	dB(A)	40	41	49	56
MED SPEED						
Fan Power Input	(1)	W	35,0	54,0	99,0	237
Air flow rate	(1)	m³/h	290	617	960	1970
Total capacity in cooling mode	(1)	kW	1,90	3,60	5,47	9,54
Total Net Cooling Capacity	(1)(6)(7)	kW	1,87	3,55	5,37	9,31
Sensible capacity in cooling mode	(1)	kW	1,38	2,55	4,01	7,61
Net sensible cooling capacity	(1)(6)(7)	kW	1,34	2,50	3,91	7,37
Net latent power in cooling	(1)(6)(7)	kW	0,52	1,05	1,46	1,94
Max water flow	(1)	l/s	0,09	0,17	0,26	0,46
Pressure Drop in cooling mode	(1)	kPa	7	25	25	29
Total capacity (heating mode)	(2)	kW	1,87	3,71	5,45	10,3
Total Net Heating Capacity	(2)(6)	kW	1,90	3,76	5,55	10,5
Water flow in heating mode	(2)	l/s	0,09	0,18	0,26	0,50
Pressure drop in heating mode	(2)	kPa	7	27	25	34
Sound Pressure	(3)	dB(A)	36	43	51	56
Sound Power	(4)(7)	dB(A)	45	52	60	65
MAX SPEED						
Fan Power Input	(1)	W	63,0	80,0	133	298
Air flow rate	(1)	m³/h	575	810	1300	2250
Total capacity in cooling mode	(1)	kW	3,20	4,56	6,97	11,3
Total Net Cooling Capacity	(1)(6)(7)	kW	3,14	4,48	6,84	11,0
Sensible capacity in cooling mode	(1)	kW	2,44	3,28	5,15	8,51
Net sensible cooling capacity	(1)(6)(7)	kW	2,38	3,20	5,01	8,21
Net latent power in cooling	(1)(6)(7)	kW	0,76	1,28	1,83	2,79
Max water flow	(1)	l/s	0,15	0,22	0,33	0,54
Pressure Drop in cooling mode	(1)	kPa	18	39	39	40
Total capacity (heating mode)	(2)	kW	3,27	4,65	7,07	11,4
Total Net Heating Capacity	(2)(6)	kW	3,33	4,73	7,21	11,7
Water flow in heating mode	(2)	l/s	0,16	0,22	0,34	0,55
Pressure drop in heating mode	(2)	kPa	19	41	41	42
Sound Pressure	(3)	dB(A)	43	49	58	61
Sound Power	(4)(7)	dB(A)	52	58	67	70
SIZE AND WEIGHT						
A	(5)	mm	580	580	730	830
B	(5)	mm	580	580	730	830
H	(5)	mm	255	290	262	290
Operating weight	(5)	kg	28	30	36	50

Notes:
1 Room temperature 27°C d.b./18,9°C w.b., Chilled water (in/out) 7°C/12°C.
2 Room temperature 20°C d.b., hot water (in/out) 45°C/40°C.
3 Sound pressure level in free field on a reflective surface, 1 m from fan front and 1 m from the ground. Non -binding value obtained fron sound power level.
4 Sound power on the basis of measurements made in compliance with ISO 3741 and Eurovent 8/2.
5 Unit in standard configuration/execution, without optional accessories.
6 Values in compliance with EN14511-3:2013.
7 Values in compliance with [REGULATION (EU) N. 2016/2281]
Certified data in EUROVENT

a-CHD			0706	1108	2209
ELECTRICAL DATA					
Power supply		V/ph/Hz	230/1/50	230/1/50	230/1/50
4 PIPES SYSTEM CONFIGURATION					
ENERGY EFFICIENCY					
COOLING (EN14511 VALUE)					
FCEER	(1)(6)	kW/kW	61	55	34
FCEER Class			D	D	F
HEATING ONLY (EN14511 VALUE)					
FCCOP	(2)(6)	kW/kW	82	45	45
FCCOP Class			D	F	F
PERFORMANCE					
MIN SPEED					
Fan Power Input	(1)	W	35,0	56,0	128
Air flow rate	(1)	m³/h	450	700	1380
Total capacity in cooling mode	(1)	kW	2,42	3,59	5,14
Total Net Cooling Capacity	(1)(6)(7)	kW	2,39	3,54	5,01
Sensible capacity in cooling mode	(1)	kW	1,77	2,63	3,87
Net sensible cooling capacity	(1)(6)(7)	kW	1,74	2,58	3,74
Net latent power in cooling	(1)(6)(7)	kW	0,65	0,96	1,27
Max water flow	(1)	l/s	0,12	0,17	0,25
Pressure Drop in cooling mode	(1)	kPa	9	22	15
Total capacity (heating mode)	(2)	kW	2,76	2,51	5,79
Total Net Heating Capacity	(2)(6)	kW	2,79	2,56	5,92
Water flow in heating mode	(2)	l/s	0,07	0,06	0,14
Pressure drop in heating mode	(2)	kPa	5	8	11
Sound Pressure	(3)	dB(A)	32	40	47
Sound Power	(4)(7)	dB(A)	41	49	56
MED SPEED					
Fan Power Input	(1)	W	54,0	99,0	237
Air flow rate	(1)	m³/h	617	960	1970
Total capacity in cooling mode	(1)	kW	2,87	4,61	6,56
Total Net Cooling Capacity	(1)(6)(7)	kW	2,82	4,51	6,33
Sensible capacity in cooling mode	(1)	kW	2,12	3,43	5,04
Net sensible cooling capacity	(1)(6)(7)	kW	2,07	3,33	4,80
Net latent power in cooling	(1)(6)(7)	kW	0,75	1,18	1,52
Max water flow	(1)	l/s	0,14	0,22	0,31
Pressure Drop in cooling mode	(1)	kPa	12	34	23
Total capacity (heating mode)	(2)	kW	3,22	3,14	7,37
Total Net Heating Capacity	(2)(6)	kW	3,28	3,24	7,61
Water flow in heating mode	(2)	l/s	0,08	0,08	0,18
Pressure drop in heating mode	(2)	kPa	7	11	19
Sound Pressure	(3)	dB(A)	43	51	56
Sound Power	(4)(7)	dB(A)	52	60	65
MAX SPEED					
Fan Power Input	(1)	W	80,0	133	298
Air flow rate	(1)	m³/h	810	1300	2250
Total capacity in cooling mode	(1)	kW	3,85	5,83	7,64
Total Net Cooling Capacity	(1)(6)(7)	kW	3,77	5,70	7,35
Sensible capacity in cooling mode	(1)	kW	2,87	4,36	5,91
Net sensible cooling capacity	(1)(6)(7)	kW	2,79	4,23	5,62
Net latent power in cooling	(1)(6)(7)	kW	0,98	1,47	1,73
Max water flow	(1)	l/s	0,18	0,28	0,37
Pressure Drop in cooling mode	(1)	kPa	19	52	30
Total capacity (heating mode)	(2)	kW	3,67	3,93	8,21
Total Net Heating Capacity	(2)(6)	kW	3,75	4,06	8,51
Water flow in heating mode	(2)	l/s	0,09	0,10	0,20
Pressure drop in heating mode	(2)	kPa	9	14	24
Sound Pressure	(3)	dB(A)	49	58	61
Sound Power	(4)(7)	dB(A)	58	67	70
SIZE AND WEIGHT					
A	(5)	mm	580	730	830
B	(5)	mm	580	730	830
H	(5)	mm	290	262	290
Operating weight	(5)	kg	30	36	50

Notes:
1 Room temperature 27°C d.b./18,9°C w.b., Chilled water (in/out) 7°C/12°C.
2 Room temperature 20°C d.b.; Hot water (in/out) 65°C/55°C; Supplementary coil 1-row.
3 Sound pressure level in free field on a reflective surface, 1 m from fan front and 1 m from the ground. Non -binding value obtained fron sound power level.
4 Sound power on the basis of measurements made in compliance with ISO 3741 and Eurovent 8/2.
5 Unit in standard configuration/execution, without optional accessories.
6 Values in compliance with EN14511-3:2013.
7 Values in compliance with [REGULATION (EU) N. 2016/2281]
Certified data in EUROVENT

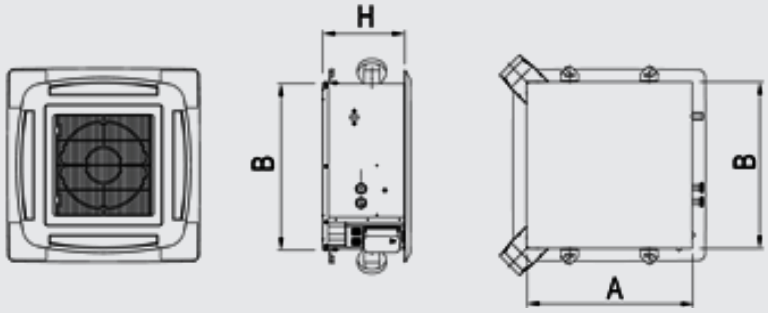
H
B
B
A

HYDRONIC TERMINALS

a-CND 0600 - 1200

Hydronic terminal cassette with Coanda effect 1,58 - 3,31 kW
1,58-3,31 kW



Version

U - 2T	2 Pipes version
U- 4T	4 Pipes Version

Features

Casing made of galvanized sheet steel with fire resistant insulation fitted internally and externally to provide both thermal and acoustic insulation.
Intake air grid on galvanized and painted steel panel
Circular ABS air diffuser, insulated internally, manually adjustable on the horizontal plan.
5-speed electric motor inclusive of thermal switch. Fan
Low-rev radial-blade fan to maximise acoustic comfort.
Coil with corrugated aluminium fins and copper pipes, tested with dried air at 14 bar.
Switchboard with power and control terminal block with screw terminals
Set-up for fresh air intake.
Set-up for duct air distribution.
Esternal Drain Pan
Fixing Brackets supplied as standard already mounted on the unit

Accessory

- Main coil 2-way/3-way valve unit
- Additional coil 2-way/3-way valve unit
- Kit Bus Adapter for BMS
- Fresh Air renewal connection
- Duct Connection Flange

The new cassettes a-CND Climaveneta is characterized by the air distribution with Coanda effect for which the air launch is always parallel to the ceiling, avoiding to directly invest the occupants of the room. With 5 speeds AC motor, the units are available in two versions: for two pipe installation (unit with single coil), and four pipe installation (unit with double coil)

Controls

MTW wall mounted
Fan speed slider, mode slider (OFF/summer/winter). Thermostat with set point regulation. ON/OFF valve unit control (summer/winter for 2 pipes installation), ON/OFF second valve unit control (winter for 4 pipes installation). Room temperature probe. Remote water temperature probe.
ATW wall mounted
Mode button (OFF/summer/winter/AUTO), fan speed button (Max/Med/Min/AUTO). Thermostat with set point regulation. ON/OFF valve unit control (summer/winter for 2 and 4 pipes installation). Control of traditional or PWM modulating valve units. Room temperature probe and water temperature probe. Digital input configurable as: window contact, economy, heating or cooling remote changeover, periodic ventilation. Configuration dip switch. TTL serial port with Modbus protocol for installation in BMS.
Remote control
In combination with (i)HB powerboard on board of the units, it's possible to have Set-point regulation, selection of functioning mode (cool, heat, dehumidify, fan), and fan speed (Max, Med, Min, AUTO). User-sfriendly compact remote control with fine aethetics.

a-CND			0600	0900	1200
ELECTRICAL DATA					
Power supply		V/ph/Hz	230/1/50	230/1/50	230/1/50
2 PIPES SYSTEM CONFIGURATION					
ENERGY EFFICIENCY					
COOLING (EN14511 VALUE)					
FCEER	(1)(6)	kW/kW	48	61	75
FCEER Class			E	D	D
HEATING ONLY (EN14511 VALUE)					
FCCOP	(2)(6)	kW/kW	48	60	73
FCCOP Class			F	E	D
PERFORMANCE					
MIN SPEED					
Fan Power Input	(1)	W	24,0	30,0	31,0
Air flow rate	(1)	m³/h	195	307	365
Total capacity in cooling mode	(1)	kW	1,19	1,90	2,38
Total Net Cooling Capacity	(1)(6)(7)	kW	1,17	1,87	2,35
Sensible capacity in cooling mode	(1)	kW	0,85	1,35	1,67
Net sensible cooling capacity	(1)(6)(7)	kW	0,83	1,32	1,64
Net latent power in cooling	(1)(6)(7)	kW	0,34	0,55	0,71
Max water flow	(1)	l/s	0,06	0,09	0,11
Pressure Drop in cooling mode	(1)	kPa	8	9	17
Total capacity (heating mode)	(2)	kW	1,18	1,88	2,31
Total Net Heating Capacity	(2)(6)	kW	1,20	1,91	2,34
Water flow in heating mode	(2)	l/s	0,06	0,09	0,11
Pressure drop in heating mode	(2)	kPa	8	8	15
Sound Pressure	(3)	dB(A)	34	34	33
Sound Power	(4)(7)	dB(A)	42	42	41
MED SPEED					
Fan Power Input	(1)	W	28,0	36,0	36,0
Air flow rate	(1)	m³/h	219	346	413
Total capacity in cooling mode	(1)	kW	1,32	2,10	2,64
Total Net Cooling Capacity	(1)(6)(7)	kW	1,29	2,07	2,61
Sensible capacity in cooling mode	(1)	kW	0,95	1,50	1,86
Net sensible cooling capacity	(1)(6)(7)	kW	0,92	1,46	1,82
Net latent power in cooling	(1)(6)(7)	kW	0,37	0,60	0,78
Max water flow	(1)	l/s	0,06	0,10	0,13
Pressure Drop in cooling mode	(1)	kPa	10	10	20
Total capacity (heating mode)	(2)	kW	1,30	2,07	2,56
Total Net Heating Capacity	(2)(6)	kW	1,33	2,11	2,60
Water flow in heating mode	(2)	l/s	0,06	0,10	0,12
Pressure drop in heating mode	(2)	kPa	9	9	17
Sound Pressure	(3)	dB(A)	36	37	36
Sound Power	(4)(7)	dB(A)	45	45	45
MAX SPEED					
Fan Power Input	(1)	W	37,0	51,0	51,0
Air flow rate	(1)	m³/h	275	451	545
Total capacity in cooling mode	(1)	kW	1,58	2,60	3,31
Total Net Cooling Capacity	(1)(6)(7)	kW	1,54	2,55	3,26
Sensible capacity in cooling mode	(1)	kW	1,14	1,87	2,34
Net sensible cooling capacity	(1)(6)(7)	kW	1,10	1,82	2,29
Net latent power in cooling	(1)(6)(7)	kW	0,44	0,73	0,97
Max water flow	(1)	l/s	0,08	0,12	0,16
Pressure Drop in cooling mode	(1)	kPa	13	14	30
Total capacity (heating mode)	(2)	kW	1,57	2,58	3,23
Total Net Heating Capacity	(2)(6)	kW	1,61	2,63	3,28
Water flow in heating mode	(2)	l/s	0,08	0,12	0,16
Pressure drop in heating mode	(2)	kPa	11	12	23
Sound Pressure	(3)	dB(A)	42	45	43
Sound Power	(4)(7)	dB(A)	51	54	51
SIZE AND WEIGHT					
A	(5)	mm	567	867	1167
B	(5)	mm	560	560	560
H	(5)	mm	265	265	265
Operating weight	(5)	kg	24	32	38

Notes:
1 Room temperature 27°C d.b./18,9°C w.b., Chilled water (in/out) 7°C/12°C.
2 Room temperature 20°C d.b., hot water (in/out) 45°C/40°C.
3 Sound pressure level in free field on a reflective surface, 1 m from fan front and 1 m from the ground. Non -binding value obtained fron sound power level.
4 Sound power on the basis of measurements made in compliance with ISO 3741 and Eurovent 8/2.
5 Unit in standard configuration/execution, without optional accessories.
6 Values in compliance with EN14511-3:2013.
7 Values in compliance with [REGULATION (EU) N. 2016/2281]
Certified data in EUROVENT

a-CND			0600	0900	1200
ELECTRICAL DATA					
Power supply		V/ph/Hz	230/1/50	230/1/50	230/1/50
4 PIPES SYSTEM CONFIGURATION					
ENERGY EFFICIENCY					
COOLING (EN14511 VALUE)					
FCEER	(1)(6)	kW/kW	48	61	75
FCEER Class			E	D	D
HEATING ONLY (EN14511 VALUE)					
FCCOP	(2)(6)	kW/kW	41	53	64
FCCOP Class			F	E	E
PERFORMANCE					
MIN SPEED					
Fan Power Input	(1)	W	24,0	30,0	31,0
Air flow rate	(1)	m³/h	195	307	365
Total capacity in cooling mode	(1)	kW	1,19	1,90	2,38
Total Net Cooling Capacity	(1)(6)(7)	kW	1,17	1,87	2,35
Sensible capacity in cooling mode	(1)	kW	0,85	1,35	1,67
Net sensible cooling capacity	(1)(6)(7)	kW	0,83	1,32	1,64
Net latent power in cooling	(1)(6)(7)	kW	0,34	0,55	0,71
Max water flow	(1)	l/s	0,06	0,09	0,11
Pressure Drop in cooling mode	(1)	kPa	8	9	17
Total capacity (heating mode)	(2)	kW	1,01	1,65	2,05
Total Net Heating Capacity	(2)(6)	kW	1,03	1,68	2,08
Water flow in heating mode	(2)	l/s	0,02	0,04	0,05
Pressure drop in heating mode	(2)	kPa	2	6	9
Sound Pressure	(3)	dB(A)	34	34	33
Sound Power	(4)(7)	dB(A)	42	42	41
MED SPEED					
Fan Power Input	(1)	W	28,0	36,0	36,0
Air flow rate	(1)	m³/h	219	346	413
Total capacity in cooling mode	(1)	kW	1,32	2,10	2,64
Total Net Cooling Capacity	(1)(6)(7)	kW	1,29	2,07	2,61
Sensible capacity in cooling mode	(1)	kW	0,95	1,50	1,86
Net sensible cooling capacity	(1)(6)(7)	kW	0,92	1,46	1,82
Net latent power in cooling	(1)(6)(7)	kW	0,37	0,60	0,78
Max water flow	(1)	l/s	0,06	0,10	0,13
Pressure Drop in cooling mode	(1)	kPa	10	10	20
Total capacity (heating mode)	(2)	kW	1,10	1,81	2,27
Total Net Heating Capacity	(2)(6)	kW	1,12	1,84	2,30
Water flow in heating mode	(2)	l/s	0,03	0,04	0,06
Pressure drop in heating mode	(2)	kPa	2	7	10
Sound Pressure	(3)	dB(A)	36	37	36
Sound Power	(4)(7)	dB(A)	45	45	45
MAX SPEED					
Fan Power Input	(1)	W	37,0	51,0	51,0
Air flow rate	(1)	m³/h	275	451	545
Total capacity in cooling mode	(1)	kW	1,58	2,60	3,31
Total Net Cooling Capacity	(1)(6)(7)	kW	1,54	2,55	3,26
Sensible capacity in cooling mode	(1)	kW	1,14	1,87	2,34
Net sensible cooling capacity	(1)(6)(7)	kW	1,10	1,82	2,29
Net latent power in cooling	(1)(6)(7)	kW	0,44	0,73	0,97
Max water flow	(1)	l/s	0,08	0,12	0,16
Pressure Drop in cooling mode	(1)	kPa	13	14	30
Total capacity (heating mode)	(2)	kW	1,30	2,20	2,78
Total Net Heating Capacity	(2)(6)	kW	1,33	2,25	2,83
Water flow in heating mode	(2)	l/s	0,03	0,05	0,07
Pressure drop in heating mode	(2)	kPa	3	8	13
Sound Pressure	(3)	dB(A)	42	45	43
Sound Power	(4)(7)	dB(A)	51	54	51
SIZE AND WEIGHT					
A	(5)	mm	567	867	1167
B	(5)	mm	560	560	560
H	(5)	mm	265	265	265
Operating weight	(5)	kg	26	34	40

Notes:
1 Room temperature 27°C d.b./18,9°C w.b., Chilled water (in/out) 7°C/12°C.
2 Room temperature 20°C d.b.; Hot water (in/out) 65°C/55°C; Supplementary coil 1-row.
3 Sound pressure level in free field on a reflective surface, 1 m from fan front and 1 m from the ground. Non -binding value obtained fron sound power level.
4 Sound power on the basis of measurements made in compliance with ISO 3741 and Eurovent 8/2.
5 Unit in standard configuration/execution, without optional accessories.
6 Values in compliance with EN14511-3:2013.
7 Values in compliance with [REGULATION (EU) N. 2016/2281]
Certified data in EUROVENT

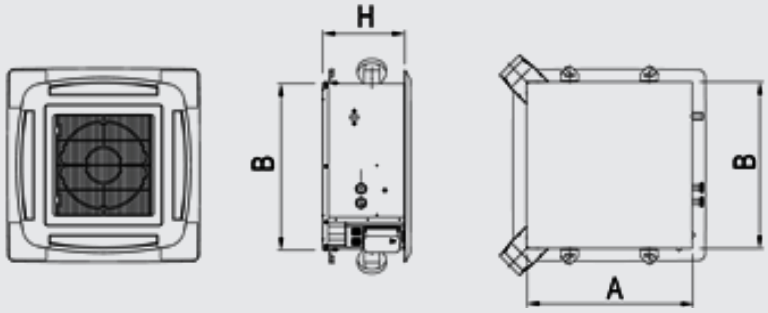
H
B
B
A

HYDRONIC TERMINALS

i-CHD 0706 - 2209

Cassette type Terminal with continuous variation of air flow and cooling power 4,56-9,42 kW



Version

U - 2T	2 Pipes version
U4T	Version for 4 pipe installations, can be realized with the cassette i- CHD 2-pipe, via the valve mounting 4FOR2.

Features

High efficiency EC motor.
Modulating speed centrifugal fan and air flow regulation.
Energy consumption reduced by more than 50%
Unit coils guarantee high efficiency thermal exchange with low pressure drop. Finned unit coils are made of copper tubes and high exchange surface area aluminium fins. Coils are always tested for leaks with dried air at 14 bar;
Frame in galvanised steel insulated with self-extinguishing closed-cell polyethylene blanket of suitable thickness, to limit heat loss and noise to a minimum. Airflow grille in ABS built in the cassette, supplied in 1 cartonbox
Electrical power and control switchboard, complete with electronic air flow regulator and terminal board for connection to network and available remote controls;
Availability to have fresh air intake, distribute the air flow in different room place thanks to air diffuser present on the unit;
Condensate auxiliary tray standard supplied;

Accessory

- Main coil 2-way/3-way valve unit
- Kit valves 4For2
- Fresh Air renewal connection
- Duct Connection Flange
- i-HB Power box
- Kit RS485 - interface for Building Management System

i-CHD is the new cassette of Climaveneta, with high efficency EC motor and Centrifugal fans that operates through a continuous air flow modulation, with low energy consumtion and perfect comfort.
i-CHD is supplyed on 2 pipes version. For the 4 Pipes installations we reccomend the 2 Pipes i-CHD cassette with 4For2 kit valves.

Controls

MTW wall mounted
Fan speed slider, mode slider (OFF/summer/winter). Thermostat with set point regulation. ON/OFF valve unit control (summer/winter for 2 pipes installation), ON/OFF second valve unit control (winter for 4 pipes installation). Room temperature probe. Remote water temperature probe.
ATW wall mounted
Mode button (OFF/summer/winter/AUTO), fan speed button (Max/Med/Min/AUTO). Thermostat with set point regulation. ON/OFF valve unit control (summer/winter for 2 and 4 pipes installation). Control of traditional or PWM modulating valve units. Room temperature probe and water temperature probe. Digital input configurable as: window contact, economy, heating or cooling remote changeover, periodic ventilation. Configuration dip switch. TTL serial port with Modbus protocol for installation in BMS.
EK plug-in control /EKW wall mounted control
User interface for selection of functioning mode (OFF/summer/winter/AUTO), fan speed (Max/Med/Min/AUTO), temperature set. Control of main and additional coil valve unit (summer/winter - 2 and 4 pipes installation) . Management of traditional ON/OFF valve unit or modulating valve unit 0-10V or 3 points . Air and water temperature probe. Multifunction digital input configurable by user. Configuration dip switch.
Modbus protocol for installation in BMS (e.g. Idrorelax system by Climaveneta). Installation and management of Master-Slave system up to 8 LIFE fan coil units.
Easy control installation thanks to 2 wires connection.
iK control with LCD screen
Interface with LCD screen with user-friendly icons. Control kit for universal installation: wall-mounted as well as plug-in. Selection of functioning mode (OFF/summer/winter/AUTO), fan speed (Max/Med/Min/AUTO), temperature set. Control iK could function manually or with weekly timer regulation configurable by the customer.
Control of main coil valve unit (summer/winter - 2 pipes) and additional coil (winter - 4 pipes). Management of traditional ON/OFF valve unit or modulating valve unit 0-10V or 3 points (supply 230 VAC or 24V) .
Parameters configurable directly by user. Modbus protocol for installation in Building Management System (e.g. Idrorelax system by Climaveneta). Installation and management of Master-Slave system up to 8 LIFE2 fan coil units.
Easy control installation thanks to 2 wires connection through HB power board
Remote control
In combination with (i)HB powerboard on board of the units, it's possible to have Set-point regulation, selection of functioning mode (cool, heat, dehumidify, fan), and fan speed (Max, Med, Min, AUTO). User-sfriendly compact remote control with fine aethetics.

i-CHD			0706	1108	2209
ELECTRICAL DATA					
Power supply		V/ph/Hz	230/1/50	230/1/50	230/1/50
2 PIPES SYSTEM CONFIGURATION					
ENERGY EFFICIENCY					
COOLING (EN14511 VALUE)					
FCEER	(1)(6)	kW/kW	134	135	130
FCEER Class			B	B	B
HEATING ONLY (EN14511 VALUE)					
FCCOP	(2)(6)	kW/kW	162	161	150
FCCOP Class			B	B	C
PERFORMANCE					
MIN SPEED					
Fan Power Input	(1)	W	13,0	16,0	25,0
Air flow rate	(1)	m³/h	200	360	820
Total capacity in cooling mode	(1)	kW	1,47	2,43	5,21
Total Net Cooling Capacity	(1)(6)(7)	kW	1,46	2,42	5,19
Sensible capacity in cooling mode	(1)	kW	1,01	1,73	4,30
Net sensible cooling capacity	(1)(6)(7)	kW	1,00	1,71	4,28
Net latent power in cooling	(1)(6)(7)	kW	0,46	0,70	0,91
Max water flow	(1)	l/s	0,07	0,12	0,25
Pressure Drop in cooling mode	(1)	kPa	5	6	9
Total capacity (heating mode)	(2)	kW	1,41	2,39	5,07
Total Net Heating Capacity	(2)(6)	kW	1,42	2,41	5,09
Water flow in heating mode	(2)	l/s	0,07	0,12	0,24
Pressure drop in heating mode	(2)	kPa	5	6	9
Sound Pressure	(3)	dB(A)	31	32	37
Sound Power	(4)(7)	dB(A)	40	41	46
MED SPEED					
Fan Power Input	(1)	W	18,0	37,0	70,0
Air flow rate	(1)	m³/h	520	820	1380
Total capacity in cooling mode	(1)	kW	3,10	4,81	7,66
Total Net Cooling Capacity	(1)(6)(7)	kW	3,08	4,78	7,59
Sensible capacity in cooling mode	(1)	kW	2,20	3,47	6,44
Net sensible cooling capacity	(1)(6)(7)	kW	2,18	3,43	6,37
Net latent power in cooling	(1)(6)(7)	kW	0,90	1,34	1,22
Max water flow	(1)	l/s	0,15	0,23	0,37
Pressure Drop in cooling mode	(1)	kPa	19	20	19
Total capacity (heating mode)	(2)	kW	3,18	4,83	7,79
Total Net Heating Capacity	(2)(6)	kW	3,20	4,87	7,86
Water flow in heating mode	(2)	l/s	0,15	0,23	0,38
Pressure drop in heating mode	(2)	kPa	20	20	20
Sound Pressure	(3)	dB(A)	40	45	50
Sound Power	(4)(7)	dB(A)	49	54	59
MAX SPEED					
Fan Power Input	(1)	W	38,0	72,0	205
Air flow rate	(1)	m³/h	810	1300	2100
Total capacity in cooling mode	(1)	kW	4,56	6,97	9,42
Total Net Cooling Capacity	(1)(6)(7)	kW	4,52	6,90	9,22
Sensible capacity in cooling mode	(1)	kW	3,20	5,08	8,08
Net sensible cooling capacity	(1)(6)(7)	kW	3,16	5,01	7,87
Net latent power in cooling	(1)(6)(7)	kW	1,36	1,89	1,35
Max water flow	(1)	l/s	0,22	0,33	0,45
Pressure Drop in cooling mode	(1)	kPa	39	39	29
Total capacity (heating mode)	(2)	kW	4,69	7,06	9,43
Total Net Heating Capacity	(2)(6)	kW	4,73	7,13	9,63
Water flow in heating mode	(2)	l/s	0,23	0,34	0,46
Pressure drop in heating mode	(2)	kPa	42	40	29
Sound Pressure	(3)	dB(A)	50	55	55
Sound Power	(4)(7)	dB(A)	59	65	67
SIZE AND WEIGHT					
A	(5)	mm	580	730	830
B	(5)	mm	580	730	830
H	(5)	mm	290	262	290
Operating weight	(5)	kg	30	36	50

Notes:
1 Room temperature 27°C d.b./18,9°C w.b., Chilled water (in/out) 7°C/12°C.
2 Room temperature 20°C d.b., hot water (in/out) 45°C/40°C.
3 Sound pressure level in free field on a reflective surface, 1 m from fan front and 1 m from the ground. Non -binding value obtained fron sound power level.
4 Sound power on the basis of measurements made in compliance with ISO 3741 and Eurovent 8/2.
5 Unit in standard configuration/execution, without optional accessories.
6 Values in compliance with EN14511-3:2013.
7 Values in compliance with [REGULATION (EU) N. 2016/2281]
Certified data in EUROVENT

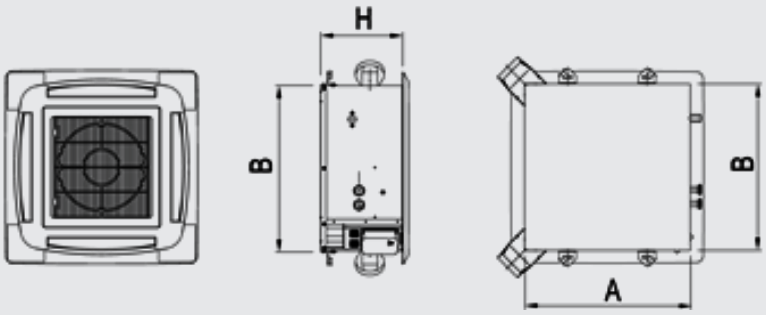
H
B
B
A

HYDRONIC TERMINALS

i-CND 0600 - 1200

Terminal Cassette type, with Coanda effect and EC motor, for continous regulation of air flow and cooling capacity 1,67 - 3,06 kW
1,67-3,06 kW



Version

U - 2T	2 Pipes version
U- 4T	4 Pipes Version

Features

Casing made of galvanized sheet steel with fire resistant insulation fitted internally and externally to provide both thermal and acoustic insulation.
Intake air grid on galvanized and painted steel panel
Circular ABS air diffuser, insulated internally, manually adjustable on the horizontal plan.
High efficiency EC motor.
Modulating speed centrifugal fan and air flow regulation.
Energy consumption reduced by more than 50%
Plug-In Control Box, supplied standard already mounted on the unit. Easy access and maintenance of Control Box
Unit coils guarantee high efficiency thermal exchange with low pressure drop. Finned unit coils are made of copper tubes and high exchange surface area aluminium fins. Coils are always tested for leaks with dried air at 14 bar;
Availability to have fresh air intake, distribute the air flow in different room place thanks to air diffuser present on the unit;
Condensate auxiliary tray standard supplied;
Fixing Brackets supplied as standard already mounted on the unit

Accessory

- Main coil 2-way/3-way valve unit
- Additional coil 2-way/3-way valve unit
- Kit RS485 - interface for Building Management System
- Fresh Air renewal connection
- Duct Connection Flange
- i-HB Power box

The new cassette i-CND Climaveneta is characterized by the air distribution with Coanda effect for which the air launch is always parallel to the ceiling, avoiding to directly invest the occupants of the room. With EC motor and centrifugal fan, i-CND operates through a continous air flow modulation, with low energy consumption and perfect comfort. The units are available in two versions: for two pipe installation (unit with single coil), and four pipe installation (unit with double coil)

Controls

Remote Control EKW
User interface for selection of functioning mode (OFF/summer/winter/AUTO), fan speed (Max/Med/Min/AUTO), temperature set. Control of main and additional coil valve unit (summer/winter - 2 and 4 pipes installation) . Management of traditional ON/OFF valve unit or modulating valve unit 0-10V or 3 points . Air and water temperature probe. Multifunction digital input configurable by user. Configuration dip switch.
Modbus protocol for installation in BMS (e.g. Idrorelax system by Climaveneta). Installation and management of Master-Slave system up to 8 LIFE2 fan coil units.
Easy control installation thanks to 2 wires connection.
iK control with LCD screen
Interface with LCD screen with user-friendly icons. Control kit for universal installation: wall-mounted as well as plug-in. Selection of functioning mode (OFF/summer/winter/AUTO), fan speed (Max/Med/Min/AUTO), temperature set. Control iK could function manually or with weekly timer regulation configurable by the customer.
Control of main coil valve unit (summer/winter - 2 pipes) and additional coil (winter - 4 pipes). Management of traditional ON/OFF valve unit or modulating valve unit 0-10V or 3 points (supply 230 VAC or 24V) .
Parameters configurable directly by user. Modbus protocol for installation in Building Management System (e.g. Idrorelax system by Climaveneta). Installation and management of Master-Slave system up to 8 LIFE2 fan coil units.
Easy control installation thanks to 2 wires connection through HB power board
Remote control
In combination with (i)HB powerboard on board of the units, it's possible to have Set-point regulation, selection of functioning mode (cool, heat, dehumidify, fan), and fan speed (Max, Med, Min, AUTO). User-sfriendly compact remote control with fine aethetics.
ATW wall mounted
Mode button (OFF/summer/winter/AUTO), fan speed button (Max/Med/Min/AUTO). Thermostat with set point regulation. ON/OFF valve unit control (summer/winter for 2 and 4 pipes installation). Control of traditional or PWM modulating valve units. Room temperature probe and water temperature probe. Digital input configurable as: window contact, economy, heating or cooling remote changeover, periodic ventilation. Configuration dip switch. TTL serial port with Modbus protocol for installation in BMS.
MTW wall mounted
Fan speed slider, mode slider (OFF/summer/winter). Thermostat with set point regulation. ON/OFF valve unit control (summer/winter for 2 pipes installation), ON/OFF second valve unit control (winter for 4 pipes installation). Room temperature probe. Remote water temperature probe.

i-CND			0600	0900	1200
ELECTRICAL DATA					
Power supply		V/ph/Hz	230/1/50	230/1/50	230/1/50
2 PIPES SYSTEM CONFIGURATION					
ENERGY EFFICIENCY					
COOLING (EN14511 VALUE)					
FCEER	(1)(6)	kW/kW	98	145	175
FCEER Class			C	B	B
HEATING ONLY (EN14511 VALUE)					
FCCOP	(2)(6)	kW/kW	100	147	176
FCCOP Class			C	C	B
PERFORMANCE					
MIN SPEED					
Fan Power Input	(1)	W	9,00	10,0	10,0
Air flow rate	(1)	m³/h	150	230	290
Total capacity in cooling mode	(1)	kW	0,99	1,51	2,00
Total Net Cooling Capacity	(1)(6)(7)	kW	0,98	1,50	1,99
Sensible capacity in cooling mode	(1)	kW	0,68	1,05	1,37
Net sensible cooling capacity	(1)(6)(7)	kW	0,67	1,04	1,36
Net latent power in cooling	(1)(6)(7)	kW	0,31	0,46	0,63
Max water flow	(1)	l/s	0,05	0,07	0,10
Pressure Drop in cooling mode	(1)	kPa	6	6	12
Total capacity (heating mode)	(2)	kW	0,99	1,51	1,97
Total Net Heating Capacity	(2)(6)	kW	1,00	1,52	1,98
Water flow in heating mode	(2)	l/s	0,05	0,07	0,10
Pressure drop in heating mode	(2)	kPa	6	6	12
Sound Pressure	(3)	dB(A)	30	28	29
Sound Power	(4)(7)	dB(A)	39	37	38
MED SPEED					
Fan Power Input	(1)	W	14,0	12,0	15,0
Air flow rate	(1)	m³/h	220	288	373
Total capacity in cooling mode	(1)	kW	1,27	1,74	2,38
Total Net Cooling Capacity	(1)(6)(7)	kW	1,26	1,73	2,37
Sensible capacity in cooling mode	(1)	kW	0,89	1,22	1,65
Net sensible cooling capacity	(1)(6)(7)	kW	0,88	1,21	1,63
Net latent power in cooling	(1)(6)(7)	kW	0,38	0,52	0,73
Max water flow	(1)	l/s	0,06	0,08	0,11
Pressure Drop in cooling mode	(1)	kPa	9	7	17
Total capacity (heating mode)	(2)	kW	1,33	1,80	2,41
Total Net Heating Capacity	(2)(6)	kW	1,34	1,81	2,42
Water flow in heating mode	(2)	l/s	0,06	0,09	0,12
Pressure drop in heating mode	(2)	kPa	9	8	16
Sound Pressure	(3)	dB(A)	37	33	37
Sound Power	(4)(7)	dB(A)	46	42	46
MAX SPEED					
Fan Power Input	(1)	W	25,0	20,0	28,0
Air flow rate	(1)	m³/h	287	365	524
Total capacity in cooling mode	(1)	kW	1,67	2,09	3,06
Total Net Cooling Capacity	(1)(6)(7)	kW	1,65	2,07	3,03
Sensible capacity in cooling mode	(1)	kW	1,20	1,48	2,16
Net sensible cooling capacity	(1)(6)(7)	kW	1,18	1,46	2,13
Net latent power in cooling	(1)(6)(7)	kW	0,47	0,61	0,90
Max water flow	(1)	l/s	0,08	0,10	0,15
Pressure Drop in cooling mode	(1)	kPa	15	10	26
Total capacity (heating mode)	(2)	kW	1,62	2,13	3,09
Total Net Heating Capacity	(2)(6)	kW	1,64	2,15	3,12
Water flow in heating mode	(2)	l/s	0,08	0,10	0,15
Pressure drop in heating mode	(2)	kPa	12	9	21
Sound Pressure	(3)	dB(A)	43	38	45
Sound Power	(4)(7)	dB(A)	52	47	54
SIZE AND WEIGHT					
A	(5)	mm	567	867	1167
B	(5)	mm	560	560	560
H	(5)	mm	265	265	265
Operating weight	(5)	kg	24	32	38

Notes:
1 Room temperature 27°C d.b./18,9°C w.b., Chilled water (in/out) 7°C/12°C.
2 Room temperature 20°C d.b., hot water (in/out) 45°C/40°C.
3 Sound pressure level in free field on a reflective surface, 1 m from fan front and 1 m from the ground. Non -binding value obtained fron sound power level.
4 Sound power on the basis of measurements made in compliance with ISO 3741 and Eurovent 8/2.
5 Unit in standard configuration/execution, without optional accessories.
6 Values in compliance with EN14511-3:2013.
7 Values in compliance with [REGULATION (EU) N. 2016/2281]
Certified data in EUROVENT

i-CND			0600	0900	1200
ELECTRICAL DATA					
Power supply		V/ph/Hz	230/1/50	230/1/50	230/1/50
4 PIPES SYSTEM CONFIGURATION					
ENERGY EFFICIENCY					
COOLING (EN14511 VALUE)					
FCEER	(1)(6)	kW/kW	98	145	175
FCEER Class			C	B	B
HEATING ONLY (EN14511 VALUE)					
FCCOP	(2)(6)	kW/kW	83	129	143
FCCOP Class			D	C	C
PERFORMANCE					
MIN SPEED					
Fan Power Input	(1)	W	9,00	10,0	10,0
Air flow rate	(1)	m³/h	150	230	290
Total capacity in cooling mode	(1)	kW	0,99	1,51	2,00
Total Net Cooling Capacity	(1)(6)(7)	kW	0,98	1,50	1,99
Sensible capacity in cooling mode	(1)	kW	0,68	1,05	1,37
Net sensible cooling capacity	(1)(6)(7)	kW	0,67	1,04	1,36
Net latent power in cooling	(1)(6)(7)	kW	0,31	0,46	0,63
Max water flow	(1)	l/s	0,05	0,07	0,10
Pressure Drop in cooling mode	(1)	kPa	6	6	12
Total capacity (heating mode)	(2)	kW	0,82	1,33	1,60
Total Net Heating Capacity	(2)(6)	kW	0,83	1,34	1,61
Water flow in heating mode	(2)	l/s	0,02	0,03	0,04
Pressure drop in heating mode	(2)	kPa	2	5	7
Sound Pressure	(3)	dB(A)	30	28	29
Sound Power	(4)(7)	dB(A)	39	37	38
MED SPEED					
Fan Power Input	(1)	W	14,0	12,0	15,0
Air flow rate	(1)	m³/h	220	288	373
Total capacity in cooling mode	(1)	kW	1,27	1,74	2,38
Total Net Cooling Capacity	(1)(6)(7)	kW	1,26	1,73	2,37
Sensible capacity in cooling mode	(1)	kW	0,89	1,22	1,65
Net sensible cooling capacity	(1)(6)(7)	kW	0,88	1,21	1,63
Net latent power in cooling	(1)(6)(7)	kW	0,38	0,52	0,73
Max water flow	(1)	l/s	0,06	0,08	0,11
Pressure Drop in cooling mode	(1)	kPa	9	7	17
Total capacity (heating mode)	(2)	kW	1,10	1,58	1,96
Total Net Heating Capacity	(2)(6)	kW	1,12	1,59	1,97
Water flow in heating mode	(2)	l/s	0,03	0,04	0,05
Pressure drop in heating mode	(2)	kPa	2	6	8
Sound Pressure	(3)	dB(A)	37	33	37
Sound Power	(4)(7)	dB(A)	46	42	46
MAX SPEED					
Fan Power Input	(1)	W	25,0	20,0	28,0
Air flow rate	(1)	m³/h	287	365	524
Total capacity in cooling mode	(1)	kW	1,67	2,09	3,06
Total Net Cooling Capacity	(1)(6)(7)	kW	1,65	2,07	3,03
Sensible capacity in cooling mode	(1)	kW	1,20	1,48	2,16
Net sensible cooling capacity	(1)(6)(7)	kW	1,18	1,46	2,13
Net latent power in cooling	(1)(6)(7)	kW	0,47	0,61	0,90
Max water flow	(1)	l/s	0,08	0,10	0,15
Pressure Drop in cooling mode	(1)	kPa	15	10	26
Total capacity (heating mode)	(2)	kW	1,34	1,88	2,51
Total Net Heating Capacity	(2)(6)	kW	1,37	1,90	2,54
Water flow in heating mode	(2)	l/s	0,03	0,05	0,06
Pressure drop in heating mode	(2)	kPa	3	7	12
Sound Pressure	(3)	dB(A)	43	38	45
Sound Power	(4)(7)	dB(A)	52	47	54
SIZE AND WEIGHT					
A	(5)	mm	567	867	1167
B	(5)	mm	560	560	560
H	(5)	mm	265	265	265
Operating weight	(5)	kg	26	34	40

Notes:
1 Room temperature 27°C d.b./18,9°C w.b., Chilled water (in/out) 7°C/12°C.
2 Room temperature 20°C d.b.; Hot water (in/out) 65°C/55°C; Supplementary coil 1-row.
3 Sound pressure level in free field on a reflective surface, 1 m from fan front and 1 m from the ground. Non -binding value obtained fron sound power level.
4 Sound power on the basis of measurements made in compliance with ISO 3741 and Eurovent 8/2.
5 Unit in standard configuration/execution, without optional accessories.
6 Values in compliance with EN14511-3:2013.
7 Values in compliance with [REGULATION (EU) N. 2016/2281]
Certified data in EUROVENT

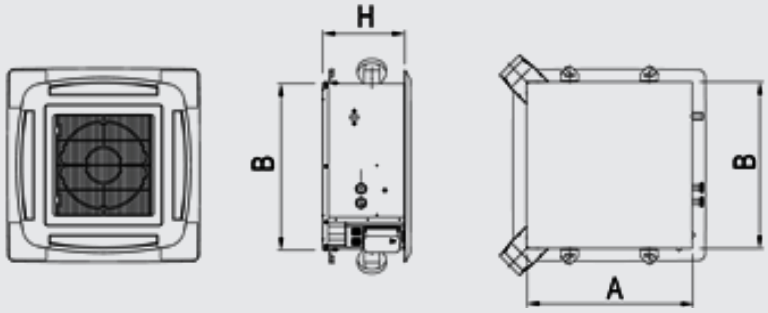
H
B
B
A

HYDRONIC TERMINALS

a-HWD2 102 - 902

High head ducted type terminal 5,87-21,9 kW



a-HWD2 are the new Climaveneta ducted high head hydronic terminals. The possibility of vertical and / or horizontal installation, compactness and the wide range of accessories or ductwork panels, make these units very flexible in installation and adaptable to any system type. The internal insulation of a-HWD2 units ensures operation with excellent acoustic comfort.
P.S. The picture is refered to the unit with mounted valves and plenum with spigots.

Version

DFIO	built-in version, front air intake, horizontal installation
DFIV	built-in version, front air intake, vertical installation
DLIO	built-in version, low air intake, horizontal installation
DLIV	built-in version, low air intake, vertical installation.

Features

Ducted Terminal unit for horizontal and vertical installation. Bearing structure made of thick galvanized steel sheet, resistant to rust, corrosion, chemical agents. Self-supporting and removable panels provided with holes for ceiling and wall mounting, directly from the main casing. Pre-cuts slots and prearranged holes to configure the unit upon request, to install the accessories, and to reverse the units even on - site. Discharge Flange on units.

EU2 efficiency flat air filters, which may be easily removed from any side of the unit (bottom, side, top) for periodic cleaning. EU3 undulated air filter section, and EU5 with pocket air filter section.

Configurations for 2 and 4 pipe Systems.

Highly efficient coil made of cooper pipes and aluminium fins. Standard connections on the right side; on request connections on the left side. Possibility to reverse the connections on-site. Coils tested at 30 Bar pressure, suitable to work with water at max. 15 Bar pressure. Incorporated additional coil, or additional coil section for 4 pipe systems.

Incorporated electrical heater, or electrical heater sections

Fan deck including 1, 2 or 3 centrifugal fans with double air inlet plastic blades directly coupled to the electric motor. Extensive diameter of fans for higher air flow and static pressure, with low RPM for better acoustic comfort.

Auxiliary drain pan with thermal insulation for all Horizontal versions, made of galvanized steel.

Plastic drain pan for all Vertical versions.

Terminal board IP20 "Mammoth Type" installed outside the unit. Upon request possible to supply the Terminal Board inside IP55 electrical box.

Accessory

- Hot water coil kit
- Heating element module
- Main and additional coil valve unit ON/OFF, PWM, 0-10 V, 3 points 2-way or 3-way
- Ductable air filter section, flat, undulated, or with pocket bags
- Plenum kit with round, straight or 90° air ducts.
- Section with Air Louver, manual and motorized
- External/Internal mixing section
- Noise level attenuator section for both air intake and supply outlets
- Section for humidifier
- Condensate drain pump
- Anti-vibration junction
- Mammoth Type terminal board kit, with IP55 electrical box
- Interface SPB Kit

Controls

ATW wall mounted

Mode button (OFF/summer/winter/AUTO), fan speed button (Max/Med/Min/AUTO). Thermostat with set point regulation. ON/OFF valve unit control (summer/winter for 2 and 4 pipes installation). Control of traditional or PWM modulating valve units. Room temperature probe and water temperature probe. Digital input configurable as: window contact, economy, heating or cooling remote changeover, periodic ventilation. Configuration dip switch. TTL serial port with Modbus protocol for installation in BMS.

MTW wall mounted

Fan speed slider, mode slider (OFF/summer/winter). Thermostat with set point regulation. ON/OFF valve unit control (summer/winter for 2 pipes installation), ON/OFF second valve unit control (winter for 4 pipes installation). Room temperature probe. Remote water temperature probe.

PSW wall mounted

Fan speed slider, mode slider (OFF/summer/winter). ON/OFF valve unit control (summer/winter for 2 pipes installation), ON/OFF second valve unit control (winter for 4 pipes installation). Remote water temperature probe.

a-HWD2 / DLIV-DFIV			102	202	302	402	502	602	702	802	902
ELECTRICAL DATA											
Power supply		V/ph/Hz	230/1/50	230/1/50	230/1/50	230/1/50	230/1/50	230/1/50	230/1/50	230/1/50	230/1/50
2 PIPES SYSTEM CONFIGURATION											
ENERGY EFFICIENCY											
COOLING (EN14511 VALUE)											
FCEER	(1)(6)	kW/kW	34	34	43	30	31	42	0	0	0
FCEER Class			D	D	C	D	D	C	G	G	G
HEATING ONLY (EN14511 VALUE)											
FCCOP	(2)(6)	kW/kW	41	42	49	37	39	49	0	0	0
FCCOP Class			C	C	C	D	D	C	G	G	G
PERFORMANCE											
MIN SPEED											
ESP External Static Pressure	(6)	Pa	24	26	29	18	20	21	27	35	36
Fan Power Input	(6)	W	128	149	149	175	222	222			
Air flow rate	(6)	m³/h	720	840	835	960	1280	1270	2400	2830	2800
Total capacity in cooling mode		kW	4,36	5,25	6,54	5,52	7,34	9,82	11,4	15,3	18,5
Total Net Cooling Capacity	(1)(6)(7)	kW	4,23	5,10	6,39	5,35	7,12	9,60			
Sensible capacity in cooling mode		kW	3,57	4,35	4,65	4,49	6,11	6,83	9,05	12,0	13,6
Net sensible cooling capacity	(1)(6)(7)	kW	3,44	4,20	4,50	4,31	5,89	6,61			
Net latent power in cooling	(1)(6)(7)	kW	0,79	0,90	1,89	1,03	1,23	2,99			
Max water flow		l/s	0,21	0,25	0,31	0,26	0,35	0,47	0,54	0,73	0,89
Pressure Drop in cooling mode	(1)	kPa	15	20	20	7	11	13			
Total capacity (heating mode)		kW	4,40	5,34	6,18	5,57	7,47	9,39	12,3	16,7	18,9
Total Net Heating Capacity	(2)(6)	kW	4,53	5,49	6,33	5,75	7,69	9,62			
Water flow in heating mode		l/s	0,21	0,26	0,30	0,27	0,36	0,45	0,60	0,81	0,91
Pressure drop in heating mode	(2)	kPa	16	21	18	7	12	12			
Sound Pressure on inlet side Lp (IR)		dB(A)	37	42	44	38	43	45	39	47	48
Sound Power on inlet side Lw (IR)		dB(A)	48	53	55	49	54	56			
Sound Pressure on outlet side Lp (OD)		dB(A)	36	40	41	33	37	41	35	43	44
Sound Power on outlet side Lw (OD)		dB(A)	47	51	52	44	48	52			
MED SPEED											
ESP External Static Pressure	(6)	Pa	50	50	50	50	50	50	50	50	50
Fan Power Input	(6)	W	170	193	193	280	344	344			
Air flow rate	(6)	m³/h	1040	1160	1145	1620	1980	1960	3220	3380	3330
Total capacity in cooling mode		kW	5,66	6,35	7,96	8,17	10,0	13,4	14,1	17,5	21,0
Total Net Cooling Capacity	(1)(6)(7)	kW	5,49	6,16	7,77	7,89	9,68	13,0			
Sensible capacity in cooling mode		kW	4,74	5,38	5,78	6,94	8,69	9,57	11,5	13,9	15,6
Net sensible cooling capacity	(1)(6)(7)	kW	4,57	5,19	5,59	6,66	8,35	9,23			
Net latent power in cooling	(1)(6)(7)	kW	0,92	0,97	2,18	1,23	1,33	3,82			
Max water flow		l/s	0,27	0,30	0,38	0,39	0,48	0,64	0,68	0,84	1,00
Pressure Drop in cooling mode	(1)	kPa	26	30	30	15	22	24			
Total capacity (heating mode)		kW	5,82	6,59	7,67	8,39	10,4	13,1	15,6	19,4	21,7
Total Net Heating Capacity	(2)(6)	kW	5,99	6,78	7,86	8,67	10,7	13,5			
Water flow in heating mode		l/s	0,28	0,32	0,37	0,41	0,50	0,63	0,75	0,94	1,05
Pressure drop in heating mode	(2)	kPa	28	32	28	16	24	23			
Sound Pressure on inlet side Lp (IR)		dB(A)	47	49	50	49	51	52	51	53	54
Sound Power on inlet side Lw (IR)		dB(A)	58	60	61	60	62	63			
Sound Pressure on outlet side Lp (OD)		dB(A)	46	47	48	46	47	48	48	50	51
Sound Power on outlet side Lw (OD)		dB(A)	57	58	59	57	58	59			
MAX SPEED											
ESP External Static Pressure	(6)	Pa	66	59	59	76	64	61	63	56	56
Fan Power Input	(6)	W	193	212	212	344	390	390			
Air flow rate	(6)	m³/h	1190	1260	1240	2000	2200	2180	3690	3660	3640
Total capacity in cooling mode		kW	6,00	6,70	8,45	9,36	10,8	14,4	15,4	18,2	21,9
Total Net Cooling Capacity	(1)(6)(7)	kW	5,81	6,49	8,24	9,02	10,4	14,0			
Sensible capacity in cooling mode		kW	5,09	5,87	6,17	8,12	9,53	10,4	12,6	14,5	16,4
Net sensible cooling capacity	(1)(6)(7)	kW	4,90	5,66	5,96	7,78	9,14	9,99			
Net latent power in cooling	(1)(6)(7)	kW	0,91	0,83	2,28	1,24	1,28	4,03			
Max water flow		l/s	0,29	0,32	0,40	0,45	0,52	0,69	0,74	0,87	1,05
Pressure Drop in cooling mode	(1)	kPa	29	33	34	20	25	28			
Total capacity (heating mode)		kW	6,22	7,01	8,16	9,70	11,3	14,2	17,2	20,5	22,9
Total Net Heating Capacity	(2)(6)	kW	6,41	7,22	8,37	10,0	11,7	14,6			
Water flow in heating mode		l/s	0,30	0,34	0,39	0,47	0,55	0,68	0,83	0,99	1,11
Pressure drop in heating mode	(2)	kPa	32	37	32	22	28	27			
Sound Pressure on inlet side Lp (IR)		dB(A)	50	51	52	53	54	55	54	54	55
Sound Power on inlet side Lw (IR)		dB(A)	61	62	63	64	65	66			
Sound Pressure on outlet side Lp (OD)		dB(A)	49	50	50	49	50	51	51	51	52
Sound Power on outlet side Lw (OD)		dB(A)	60	61	61	60	61	62			
SIZE AND WEIGHT											
A	(5)	mm	880	880	880	1280	1280	1280	1680	1680	1680
B	(5)	mm	630	630	630	630	630	630	630	630	630
H	(5)	mm	275	275	275	275	275	275	275	275	275
Operating weight	(5)	kg	37	38	40	52	54	57	68	70	73

Notes:
1 Room temperature 27 °C d.b./19 °C w.b.; Chilled water (in/out) 7/12 °C.
2 Room temperature 20 °C d.b.; Hot water (in/out) 45/40 °C
5 Unit in standard configuration/execution, without optional accessories.
6 Values in compliance with EN14511-3:2013.
7 Values in compliance with [REGULATION (EU) N. 2016/2281]
Certified data in EUROVENT

a-HWD2 / DLIO-DFIO			102	202	302	402	502	602	702	802	902
ELECTRICAL DATA											
Power supply		V/ph/Hz	230/1/50	230/1/50	230/1/50	230/1/50	230/1/50	230/1/50	230/1/50	230/1/50	230/1/50
2 PIPES SYSTEM CONFIGURATION											
ENERGY EFFICIENCY											
COOLING (EN14511 VALUE)											
FCEER	(1)(6)	kW/kW	34	34	43	30	31	42	0	0	0
FCEER Class			D	D	C	D	D	C	G	G	G
HEATING ONLY (EN14511 VALUE)											
FCCOP	(2)(6)	kW/kW	41	42	49	37	39	49	0	0	0
FCCOP Class			C	C	C	D	D	C	G	G	G
PERFORMANCE											
MIN SPEED											
ESP External Static Pressure	(6)	Pa	24	26	29	18	20	21	27	35	36
Fan Power Input	(6)	W	128	149	149	175	222	222			
Air flow rate	(6)	m³/h	720	840	835	960	1280	1270	2400	2830	2800
Total capacity in cooling mode		kW	4,36	5,25	6,54	5,52	7,34	9,82	11,4	15,3	18,5
Total Net Cooling Capacity	(1)(6)(7)	kW	4,23	5,10	6,39	5,35	7,12	9,60			
Sensible capacity in cooling mode		kW	3,57	4,35	4,65	4,49	6,11	6,83	9,05	12,0	13,6
Net sensible cooling capacity	(1)(6)(7)	kW	3,44	4,20	4,50	4,31	5,89	6,61			
Net latent power in cooling	(1)(6)(7)	kW	0,79	0,90	1,89	1,03	1,23	2,99			
Max water flow		l/s	0,21	0,25	0,31	0,26	0,35	0,47	0,54	0,73	0,89
Pressure Drop in cooling mode	(1)	kPa	15	20	20	7	11	13			
Total capacity (heating mode)		kW	4,40	5,34	6,18	5,57	7,47	9,39	12,3	16,7	18,9
Total Net Heating Capacity	(2)(6)	kW	4,53	5,49	6,33	5,75	7,69	9,62			
Water flow in heating mode		l/s	0,21	0,26	0,30	0,27	0,36	0,45	0,60	0,81	0,91
Pressure drop in heating mode	(2)	kPa	16	21	18	7	12	12			
Sound Pressure on inlet side Lp (IR)		dB(A)	37	42	44	38	43	45	39	47	48
Sound Power on inlet side Lw (IR)		dB(A)	48	53	55	49	54	56			
Sound Pressure on outlet side Lp (OD)		dB(A)	36	40	41	33	37	41	35	43	44
Sound Power on outlet side Lw (OD)		dB(A)	47	51	52	44	48	52			
MED SPEED											
ESP External Static Pressure	(6)	Pa	50	50	50	50	50	50	50	50	50
Fan Power Input	(6)	W	170	193	193	280	344	344			
Air flow rate	(6)	m³/h	1040	1160	1145	1620	1980	1960	3220	3380	3330
Total capacity in cooling mode		kW	5,66	6,35	7,96	8,17	10,0	13,4	14,1	17,5	21,0
Total Net Cooling Capacity	(1)(6)(7)	kW	5,49	6,16	7,77	7,89	9,68	13,0			
Sensible capacity in cooling mode		kW	4,74	5,38	5,78	6,94	8,69	9,57	11,5	13,9	15,6
Net sensible cooling capacity	(1)(6)(7)	kW	4,57	5,19	5,59	6,66	8,35	9,23			
Net latent power in cooling	(1)(6)(7)	kW	0,92	0,97	2,18	1,23	1,33	3,82			
Max water flow		l/s	0,27	0,30	0,38	0,39	0,48	0,64	0,68	0,84	1,00
Pressure Drop in cooling mode	(1)	kPa	26	30	30	15	22	24			
Total capacity (heating mode)		kW	5,82	6,59	7,67	8,39	10,4	13,1	15,6	19,4	21,7
Total Net Heating Capacity	(2)(6)	kW	5,99	6,78	7,86	8,67	10,7	13,5			
Water flow in heating mode		l/s	0,28	0,32	0,37	0,41	0,50	0,63	0,75	0,94	1,05
Pressure drop in heating mode	(2)	kPa	28	32	28	16	24	23			
Sound Pressure on inlet side Lp (IR)		dB(A)	47	49	50	49	51	52	51	53	54
Sound Power on inlet side Lw (IR)		dB(A)	58	60	61	60	62	63			
Sound Pressure on outlet side Lp (OD)		dB(A)	46	47	48	46	47	48	48	50	51
Sound Power on outlet side Lw (OD)		dB(A)	57	58	59	57	58	59			
MAX SPEED											
ESP External Static Pressure	(6)	Pa	66	59	59	76	64	61	63	56	56
Fan Power Input	(6)	W	193	212	212	344	390	390			
Air flow rate	(6)	m³/h	1190	1260	1240	2000	2200	2180	3690	3660	3640
Total capacity in cooling mode		kW	6,00	6,70	8,45	9,36	10,8	14,4	15,4	18,2	21,9
Total Net Cooling Capacity	(1)(6)(7)	kW	5,81	6,49	8,24	9,02	10,4	14,0			
Sensible capacity in cooling mode		kW	5,09	5,87	6,17	8,12	9,53	10,4	12,6	14,5	16,4
Net sensible cooling capacity	(1)(6)(7)	kW	4,90	5,66	5,96	7,78	9,14	9,99			
Net latent power in cooling	(1)(6)(7)	kW	0,91	0,83	2,28	1,24	1,28	4,03			
Max water flow		l/s	0,29	0,32	0,40	0,45	0,52	0,69	0,74	0,87	1,05
Pressure Drop in cooling mode	(1)	kPa	29	33	34	20	25	28			
Total capacity (heating mode)		kW	6,22	7,01	8,16	9,70	11,3	14,2	17,2	20,5	22,9
Total Net Heating Capacity	(2)(6)	kW	6,41	7,22	8,37	10,0	11,7	14,6			
Water flow in heating mode		l/s	0,30	0,34	0,39	0,47	0,55	0,68	0,83	0,99	1,11
Pressure drop in heating mode	(2)	kPa	32	37	32	22	28	27			
Sound Pressure on inlet side Lp (IR)		dB(A)	50	51	52	53	54	55	54	54	55
Sound Power on inlet side Lw (IR)		dB(A)	61	62	63	64	65	66			
Sound Pressure on outlet side Lp (OD)		dB(A)	49	50	50	49	50	51	51	51	52
Sound Power on outlet side Lw (OD)		dB(A)	60	61	61	60	61	62			
SIZE AND WEIGHT											
A	(5)	mm	880	880	880	1280	1280	1280	1680	1680	1680
B	(5)	mm	605	605	605	605	605	605	605	605	605
H	(5)	mm	275	275	275	275	275	275	275	275	275
Operating weight	(5)	kg	37	38	40	52	54	57	68	70	73

Notes:
1 Room temperature 27 °C d.b./19 °C w.b.; Chilled water (in/out) 7/12 °C.
2 Room temperature 20 °C d.b.; Hot water (in/out) 45/40 °C
5 Unit in standard configuration/execution, without optional accessories.
6 Values in compliance with EN14511-3:2013.
7 Values in compliance with [REGULATION (EU) N. 2016/2281]
Certified data in EUROVENT

a-HWD2 / DLIV-DFIV			104	204	404	504	704	804
ELECTRICAL DATA								
Power supply		V/ph/Hz	230/1/50	230/1/50	230/1/50	230/1/50	230/1/50	230/1/50
4 PIPES SYSTEM CONFIGURATION								
ENERGY EFFICIENCY								
COOLING (EN14511 VALUE)								
FCEER	(1)(6)	kW/kW	33	33	30	30	0	0
FCEER Class			D	D	D	D	G	G
HEATING ONLY (EN14511 VALUE)								
FCCOP	(2)(6)	kW/kW	31	31	30	30	0	0
FCCOP Class			D	D	D	D	G	G
PERFORMANCE								
MIN SPEED								
ESP External Static Pressure	(6)	Pa	24	26	18	20	27	35
Fan Power Input	(6)	W	128	149	175	222		
Air flow rate	(6)	m³/h	700	810	930	1240	2330	2750
Total capacity in cooling mode		kW	4,27	5,13	5,40	7,18	11,1	15,0
Total Net Cooling Capacity	(1)(6)(7)	kW	4,14	4,98	5,23	6,96		
Sensible capacity in cooling mode		kW	3,48	4,25	4,38	5,96	8,83	11,7
Net sensible cooling capacity	(1)(6)(7)	kW	3,35	4,10	4,20	5,74		
Net latent power in cooling	(1)(6)(7)	kW	0,79	0,88	1,02	1,22		
Max water flow		l/s	0,20	0,25	0,26	0,34	0,53	0,72
Pressure Drop in cooling mode	(1)	kPa	15	19	7	11		
Total capacity (heating mode)		kW	3,60	4,19	4,87	6,09	10,4	11,9
Total Net Heating Capacity	(2)(6)	kW	3,73	4,34	5,05	6,31		
Water flow in heating mode		l/s	0,09	0,10	0,12	0,15	0,25	0,29
Pressure drop in heating mode	(2)	kPa	5	7	4	7		
Sound Pressure on inlet side Lp (IR)		dB(A)	37	45	38	43	39	47
Sound Power on inlet side Lw (IR)		dB(A)	48	56	49	54		
Sound Pressure on outlet side Lp (OD)		dB(A)	36	43	33	37	35	0
Sound Power on outlet side Lw (OD)		dB(A)	47	54	44	48		
MED SPEED								
ESP External Static Pressure	(6)	Pa	50	50	50	50	50	50
Fan Power Input	(6)	W	170	193	280	344		
Air flow rate	(6)	m³/h	1010	1130	1570	1920	3130	3280
Total capacity in cooling mode		kW	5,53	6,21	7,99	9,80	13,8	17,1
Total Net Cooling Capacity	(1)(6)(7)	kW	5,36	6,02	7,71	9,46		
Sensible capacity in cooling mode		kW	4,63	5,25	6,77	8,48	11,2	13,5
Net sensible cooling capacity	(1)(6)(7)	kW	4,46	5,06	6,49	8,14		
Net latent power in cooling	(1)(6)(7)	kW	0,90	0,96	1,22	1,32		
Max water flow		l/s	0,26	0,30	0,38	0,47	0,66	0,82
Pressure Drop in cooling mode	(1)	kPa	25	28	15	21		
Total capacity (heating mode)		kW	4,72	5,33	7,23	8,57	13,1	13,7
Total Net Heating Capacity	(2)(6)	kW	4,89	5,53	7,51	8,91		
Water flow in heating mode		l/s	0,11	0,13	0,18	0,21	0,32	0,33
Pressure drop in heating mode	(2)	kPa	9	11	9	13		
Sound Pressure on inlet side Lp (IR)		dB(A)	47	49	49	51	51	53
Sound Power on inlet side Lw (IR)		dB(A)	58	60	60	62		
Sound Pressure on outlet side Lp (OD)		dB(A)	46	47	46	47	48	0
Sound Power on outlet side Lw (OD)		dB(A)	57	58	57	58		
MAX SPEED								
ESP External Static Pressure	(6)	Pa	66	59	76	64	63	56
Fan Power Input	(6)	W	193	212	344	390		
Air flow rate	(6)	m³/h	1150	1220	1940	2130	3620	3610
Total capacity in cooling mode		kW	5,87	6,56	9,15	10,6	15,2	18,0
Total Net Cooling Capacity	(1)(6)(7)	kW	5,68	6,35	8,81	10,2		
Sensible capacity in cooling mode		kW	4,96	5,73	7,92	9,30	12,4	14,4
Net sensible cooling capacity	(1)(6)(7)	kW	4,77	5,52	7,58	8,91		
Net latent power in cooling	(1)(6)(7)	kW	0,91	0,83	1,23	1,28		
Max water flow		l/s	0,28	0,31	0,44	0,51	0,73	0,86
Pressure Drop in cooling mode	(1)	kPa	28	32	19	24		
Total capacity (heating mode)		kW	5,24	5,69	8,47	9,39	14,4	14,4
Total Net Heating Capacity	(2)(6)	kW	5,43	5,90	8,81	9,78		
Water flow in heating mode		l/s	0,13	0,14	0,21	0,23	0,35	0,35
Pressure drop in heating mode	(2)	kPa	11	13	12	15		
Sound Pressure on inlet side Lp (IR)		dB(A)	50	51	53	54	54	54
Sound Power on inlet side Lw (IR)		dB(A)	61	62	64	65		
Sound Pressure on outlet side Lp (OD)		dB(A)	49	50	49	50	51	0
Sound Power on outlet side Lw (OD)		dB(A)	60	61	60	61		
SIZE AND WEIGHT								
A	(5)	mm	880	880	1280	1280	1680	1680
B	(5)	mm	630	630	630	630	630	630
H	(5)	mm	275	275	275	275	275	275
Operating weight	(5)	kg	39	40	55	57	72	74

Notes:
1 Room temperature 27 °C d.b./19 °C w.b.; Chilled water (in/out) 7/12 °C.
2 Room temperature 20 °C d.b.; Hot water (in/out) 45/40 °C
5 Unit in standard configuration/execution, without optional accessories.
6 Values in compliance with EN14511-3:2013.
7 Values in compliance with [REGULATION (EU) N. 2016/2281]
Certified data in EUROVENT

a-HWD2 / DLIO-DFIO			104	204	404	504	704	804
ELECTRICAL DATA								
Power supply		V/ph/Hz	230/1/50	230/1/50	230/1/50	230/1/50	230/1/50	230/1/50
4 PIPES SYSTEM CONFIGURATION								
ENERGY EFFICIENCY								
COOLING (EN14511 VALUE)								
FCEER	(1)(6)	kW/kW	33	33	30	30	0	0
FCEER Class			D	D	D	D	G	G
HEATING ONLY (EN14511 VALUE)								
FCCOP	(2)(6)	kW/kW	31	31	30	30	0	0
FCCOP Class			D	D	D	D	G	G
PERFORMANCE								
MIN SPEED								
ESP External Static Pressure	(6)	Pa	24	26	18	20	27	35
Fan Power Input	(6)	W	128	149	175	222		
Air flow rate	(6)	m³/h	700	810	930	1240	2330	2750
Total capacity in cooling mode		kW	4,27	5,13	5,40	7,18	11,1	15,0
Total Net Cooling Capacity	(1)(6)(7)	kW	4,14	4,98	5,23	6,96		
Sensible capacity in cooling mode		kW	3,48	4,25	4,38	5,96	8,83	11,7
Net sensible cooling capacity	(1)(6)(7)	kW	3,35	4,10	4,20	5,74		
Net latent power in cooling	(1)(6)(7)	kW	0,79	0,88	1,02	1,22		
Max water flow		l/s	0,20	0,25	0,26	0,34	0,53	0,72
Pressure Drop in cooling mode	(1)	kPa	15	19	7	11		
Total capacity (heating mode)		kW	3,60	4,19	4,87	6,09	10,4	11,9
Total Net Heating Capacity	(2)(6)	kW	3,73	4,34	5,05	6,31		
Water flow in heating mode		l/s	0,09	0,10	0,12	0,15	0,25	0,29
Pressure drop in heating mode	(2)	kPa	5	7	4	7		
Sound Pressure on inlet side Lp (IR)		dB(A)	37	45	38	43	39	47
Sound Power on inlet side Lw (IR)		dB(A)	48	56	49	54		
Sound Pressure on outlet side Lp (OD)		dB(A)	36	43	33	37	35	0
Sound Power on outlet side Lw (OD)		dB(A)	47	54	44	48		
MED SPEED								
ESP External Static Pressure	(6)	Pa	50	50	50	50	50	50
Fan Power Input	(6)	W	170	193	280	344		
Air flow rate	(6)	m³/h	1010	1130	1570	1920	3130	3280
Total capacity in cooling mode		kW	5,53	6,21	7,99	9,80	13,8	17,1
Total Net Cooling Capacity	(1)(6)(7)	kW	5,36	6,02	7,71	9,46		
Sensible capacity in cooling mode		kW	4,63	5,25	6,77	8,48	11,2	13,5
Net sensible cooling capacity	(1)(6)(7)	kW	4,46	5,06	6,49	8,14		
Net latent power in cooling	(1)(6)(7)	kW	0,90	0,96	1,22	1,32		
Max water flow		l/s	0,26	0,30	0,38	0,47	0,66	0,82
Pressure Drop in cooling mode	(1)	kPa	25	28	15	21		
Total capacity (heating mode)		kW	4,72	5,33	7,23	8,57	13,1	13,7
Total Net Heating Capacity	(2)(6)	kW	4,89	5,53	7,51	8,91		
Water flow in heating mode		l/s	0,11	0,13	0,18	0,21	0,32	0,33
Pressure drop in heating mode	(2)	kPa	9	11	9	13		
Sound Pressure on inlet side Lp (IR)		dB(A)	47	49	49	51	51	53
Sound Power on inlet side Lw (IR)		dB(A)	58	60	60	62		
Sound Pressure on outlet side Lp (OD)		dB(A)	46	47	46	47	48	0
Sound Power on outlet side Lw (OD)		dB(A)	57	58	57	58		
MAX SPEED								
ESP External Static Pressure	(6)	Pa	66	59	76	64	63	56
Fan Power Input	(6)	W	193	212	344	390		
Air flow rate	(6)	m³/h	1150	1220	1940	2130	3620	3610
Total capacity in cooling mode		kW	5,87	6,56	9,15	10,6	15,2	18,0
Total Net Cooling Capacity	(1)(6)(7)	kW	5,68	6,35	8,81	10,2		
Sensible capacity in cooling mode		kW	4,96	5,73	7,92	9,30	12,4	14,4
Net sensible cooling capacity	(1)(6)(7)	kW	4,77	5,52	7,58	8,91		
Net latent power in cooling	(1)(6)(7)	kW	0,91	0,83	1,23	1,28		
Max water flow		l/s	0,28	0,31	0,44	0,51	0,73	0,86
Pressure Drop in cooling mode	(1)	kPa	28	32	19	24		
Total capacity (heating mode)		kW	5,24	5,69	8,47	9,39	14,4	14,4
Total Net Heating Capacity	(2)(6)	kW	5,43	5,90	8,81	9,78		
Water flow in heating mode		l/s	0,13	0,14	0,21	0,23	0,35	0,35
Pressure drop in heating mode	(2)	kPa	11	13	12	15		
Sound Pressure on inlet side Lp (IR)		dB(A)	50	51	53	54	54	54
Sound Power on inlet side Lw (IR)		dB(A)	61	62	64	65		
Sound Pressure on outlet side Lp (OD)		dB(A)	49	50	49	50	51	0
Sound Power on outlet side Lw (OD)		dB(A)	60	61	60	61		
SIZE AND WEIGHT								
A	(5)	mm	880	880	1280	1280	1680	1680
B	(5)	mm	605	605	605	605	605	605
H	(5)	mm	275	275	275	275	275	275
Operating weight	(5)	kg	39	40	55	57	72	74

Notes:
1 Room temperature 27 °C d.b./19 °C w.b.; Chilled water (in/out) 7/12 °C.
2 Room temperature 20 °C d.b.; Hot water (in/out) 45/40 °C
5 Unit in standard configuration/execution, without optional accessories.
6 Values in compliance with EN14511-3:2013.
7 Values in compliance with [REGULATION (EU) N. 2016/2281]
Certified data in EUROVENT

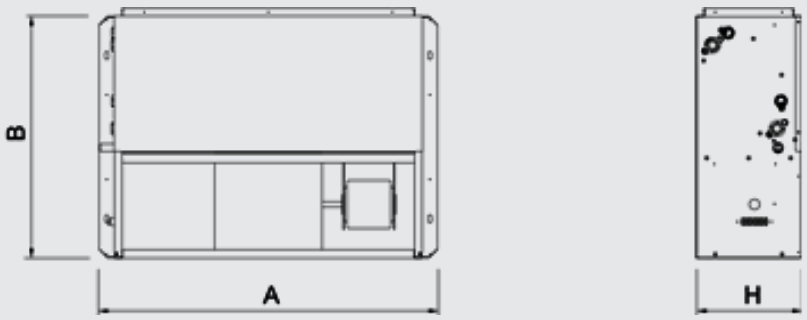
B
A
H

HYDRONIC TERMINALS

i-HWD2 102 - 902

Ducted High Head Hydronic Terminal with EC Brushless motor for continuous regulation of fan speed and air flow. 6,20-22,3 kW



The new high head ducted units i-HWD2, are equipped with an EC Brushless motor fan of new generation with continuous modulation of the air flow, which ensures better comfort and real energy savings. The possibility of vertical and / or horizontal installation, the small dimensions and the wide range of accessories for the canalization, make these units very flexible in installation and adaptable to any type of system. Thanks to the brushless motor and the internal insulation the i-HWD2 guarantee an operation with high levels of acoustic comfort.

Version

DFIO	built-in version, front air intake, horizontal installation
DFIV	built-in version, front air intake, vertical installation
DLIO	built-in version, low air intake, horizontal installation
DLIV	built-in version, low air intake, vertical installation.

Features

Ducted Terminal unit for horizontal and vertical installation. Bearing structure made of thick galvanized steel sheet, resistant to rust, corrosion, chemical agents. Self-supporting and removable panels provided with holes for ceiling and wall mounting, directly from the main casing. Pre-cuts slots and prearranged holes to configure the unit upon request, to install the accessories, and to reverse the units even on - site. Discharge Flange on units.

High pressure centrifugal fan unit for ducted system;

High efficiency EC motor.

Modulating speed centrifugal fan and air flow regulation.

Energy consumption reduced by more than 50%

Highly efficient coil made of cooper pipes and aluminium fins. Standard connections on the right side; on request connections on the left side. Possibility to reverse the connections on-site. Coils tested at 30 Bar pressure, suitable to work with water at max. 15 Bar pressure. Incorporated additional coil, or additional coil section for 4 pipe systems.

EU2 efficiency flat air filters, which may be easily removed from any side of the unit (bottom, side, top) for periodic cleaning. EU3 undulated air filter section, and EU5 with pocket air filter section.

Incorporated electrical heater, or electrical heater sections

Auxiliary drain pan with thermal insulation for all Horizontal versions, made of galvanized steel.

Configurations for 2 and 4 pipe Systems.

Accessory

- Hot water coil kit
- Heating element module
- Main coil 2-way/3-way valve unit
- Additional coil 2-way/3-way valve unit
- Ductable air filter section, flat, undulated, or with pocket bags
- Plenum kit with round, straight or 90° air ducts.
- Section with Air Louver, manual and motorized
- Noise level attenuator section for both air intake and supply outlets
- Section for humidifier
- Interface SPB Kit
- i-HB Power box
- Kit control board to manage 0-10V or 3 points modulating valve unit
- Kit RS485 - interface for Building Management System
- Kit Gateway interface for MyHome Bticino System
- Auxiliary condensate collecting tray

Controls

ATW-EC Wall Control

User interface for selection of functioning mode (Off/Summer/Winter/Auto), fan speed (Max, Med, Min, Auto), and temperature set. Control of main and additional coil valve unit. (summer/winter 2 and 4 pipes installation). Management of traditional ON/OFF valve unit. Air and water temperature probe. Multifunction digital input configurable by user. Configuration dip switch. The controls can be connected to BMS system.

Remote Control EKW

User interface for selection of functioning mode (OFF/summer/winter/AUTO), fan speed (Max/Med/Min/AUTO), temperature set. Control of main and additional coil valve unit (summer/winter - 2 and 4 pipes installation) . Management of traditional ON/OFF valve unit or modulating valve unit 0-10V or 3 points . Air and water temperature probe. Multifunction digital input configurable by user. Configuration dip switch.

Modbus protocol for installation in BMS (e.g. Idrorelax system by Climaveneta). Installation and management of Master-Slave system up to 8 LIFE2 fan coil units.

Easy control installation thanks to 2 wires connection.

iK control with LCD screen

Interface with LCD screen with user-friendly icons. Control kit for universal installation: wall-mounted as well as plug-in. Selection of functioning mode (OFF/summer/winter/AUTO), fan speed (Max/Med/Min/AUTO), temperature set. Control iK could function manually or with weekly timer regulation configurable by the customer.

Control of main coil valve unit (summer/winter - 2 pipes) and additional coil (winter - 4 pipes). Management of traditional ON/OFF valve unit or modulating valve unit 0-10V or 3 points (supply 230 VAC or 24V) .

Parameters configurable directly by user. Modbus protocol for installation in Building Management System (e.g. Idrorelax system by Climaveneta). Installation and management of Master-Slave system up to 8 LIFE2 fan coil units.

Easy control installation thanks to 2 wires connection through HB power board

i-HWD2 / DLIV-DFIV			102	202	302	402	502	602	702	802	902
ELECTRICAL DATA											
Power supply		V/ph/Hz	230/1/50	230/1/50	230/1/50	230/1/50	230/1/50	230/1/50	230/1/50	230/1/50	230/1/50
2 PIPES SYSTEM CONFIGURATION											
ENERGY EFFICIENCY											
COOLING (EN14511 VALUE)											
FCEER	(1)(6)	kW/kW	84	69	95	87	71	90	0	0	0
FCEER Class			B	B	A	A	B	A	G	G	G
HEATING ONLY (EN14511 VALUE)											
FCCOP	(2)(6)	kW/kW	104	87	112	109	91	109	0	0	0
FCCOP Class			A	A	A	A	A	A	G	G	G
PERFORMANCE											
MIN SPEED											
ESP External Static Pressure	(6)	Pa	14	20	20	8	14	14	19	27	27
Fan Power Input	(6)	W	42,1	58,9	54,8	43,0	64,8	71,9			
Air flow rate	(6)	m³/h	732	850	849	980	1294	1284	2473	2885	2854
Total capacity in cooling mode		kW	4,41	5,29	6,60	5,60	7,40	9,89	11,6	15,5	18,8
Total Net Cooling Capacity	(1)(6)(7)	kW	4,32	5,20	6,50	5,48	7,27	9,75			
Sensible capacity in cooling mode		kW	3,62	4,39	4,70	4,56	6,17	6,89	9,27	12,1	13,8
Net sensible cooling capacity	(1)(6)(7)	kW	3,53	4,29	4,61	4,45	6,04	6,76			
Net latent power in cooling	(1)(6)(7)	kW	0,79	0,90	1,90	1,03	1,23	2,99			
Max water flow		l/s	0,21	0,25	0,32	0,27	0,35	0,47	0,56	0,74	0,90
Pressure Drop in cooling mode	(1)	kPa	15	20	20	7	11	13			
Total capacity (heating mode)		kW	4,95	5,99	6,93	6,28	8,37	10,5	14,0	18,9	21,3
Total Net Heating Capacity	(2)(6)	kW	4,93	6,00	6,93	6,24	8,36	10,5			
Water flow in heating mode		l/s	0,24	0,29	0,33	0,30	0,40	0,51	0,68	0,91	1,03
Pressure drop in heating mode	(2)	kPa	20	26	23	9	15	15			
Sound Pressure on inlet side Lp (IR)		dB(A)	38	42	44	38	43	45	40	48	49
Sound Power on inlet side Lw (IR)		dB(A)	48	53	55	49	54	56			
Sound Pressure on outlet side Lp (OD)		dB(A)	37	40	41	34	37	41	36	44	45
Sound Power on outlet side Lw (OD)		dB(A)	47	51	52	44	48	52			
MED SPEED											
ESP External Static Pressure	(6)	Pa	30	38	38	23	34	35	35	39	40
Fan Power Input	(6)	W	82,6	120	107	123	205	209			
Air flow rate	(6)	m³/h	1077	1189	1174	1685	2044	2023	3336	3474	3427
Total capacity in cooling mode		kW	5,74	6,45	8,11	8,37	10,2	13,7	14,5	17,7	21,3
Total Net Cooling Capacity	(1)(6)(7)	kW	5,58	6,24	7,86	8,05	9,82	13,2			
Sensible capacity in cooling mode		kW	4,83	5,52	5,90	7,14	8,93	9,80	11,9	14,1	15,9
Net sensible cooling capacity	(1)(6)(7)	kW	4,66	5,26	5,68	6,82	8,48	9,36			
Net latent power in cooling	(1)(6)(7)	kW	0,92	0,97	2,18	1,23	1,33	3,82			
Max water flow		l/s	0,27	0,31	0,39	0,40	0,49	0,65	0,69	0,85	1,02
Pressure Drop in cooling mode	(1)	kPa	26	30	30	15	22	24			
Total capacity (heating mode)		kW	6,57	7,46	8,68	9,58	11,8	14,9	17,9	22,0	24,6
Total Net Heating Capacity	(2)(6)	kW	6,55	7,44	8,63	9,45	11,7	14,8			
Water flow in heating mode		l/s	0,32	0,36	0,42	0,46	0,57	0,72	0,86	1,06	1,19
Pressure drop in heating mode	(2)	kPa	34	40	35	20	29	29			
Sound Pressure on inlet side Lp (IR)		dB(A)	48	50	51	50	52	53	52	53	54
Sound Power on inlet side Lw (IR)		dB(A)	58	60	61	60	62	63			
Sound Pressure on outlet side Lp (OD)		dB(A)	47	48	49	47	48	49	49	50	51
Sound Power on outlet side Lw (OD)		dB(A)	57	58	59	57	58	59			
MAX SPEED											
ESP External Static Pressure	(6)	Pa	41	46	46	38	45	45	46	46	46
Fan Power Input	(6)	W	116	149	132	211	284	275			
Air flow rate	(6)	m³/h	1251	1299	1280	2146	2342	2299	3829	3746	3710
Total capacity in cooling mode		kW	6,20	6,85	8,64	9,85	11,3	15,0	15,9	18,6	22,3
Total Net Cooling Capacity	(1)(6)(7)	kW	5,89	6,56	8,33	9,15	10,6	14,1			
Sensible capacity in cooling mode		kW	5,37	6,02	6,33	8,64	10,0	10,8	13,1	14,9	16,7
Net sensible cooling capacity	(1)(6)(7)	kW	4,98	5,72	6,04	7,91	9,29	10,1			
Net latent power in cooling	(1)(6)(7)	kW	0,91	0,83	2,28	1,24	1,29	4,02			
Max water flow		l/s	0,30	0,33	0,41	0,47	0,54	0,72	0,76	0,89	1,07
Pressure Drop in cooling mode	(1)	kPa	29	33	34	20	25	28			
Total capacity (heating mode)		kW	7,18	7,96	9,28	11,4	13,1	16,4	19,8	23,2	25,9
Total Net Heating Capacity	(2)(6)	kW	7,04	7,94	9,20	11,0	12,9	16,0			
Water flow in heating mode		l/s	0,35	0,38	0,45	0,55	0,63	0,79	0,95	1,12	1,25
Pressure drop in heating mode	(2)	kPa	40	46	40	27	35	34			
Sound Pressure on inlet side Lp (IR)		dB(A)	51	51	52	54	54	55	54	54	55
Sound Power on inlet side Lw (IR)		dB(A)	61	62	63	64	65	66			
Sound Pressure on outlet side Lp (OD)		dB(A)	50	50	50	50	50	51	51	51	52
Sound Power on outlet side Lw (OD)		dB(A)	60	61	61	60	61	62			
SIZE AND WEIGHT											
A	(5)	mm	880	880	880	1280	1280	1280	1680	1680	1680
B	(5)	mm	630	630	630	630	630	630	630	630	630
H	(5)	mm	275	275	275	275	275	275	275	275	275
Operating weight	(5)	kg	37	38	40	52	54	57	68	70	73

Notes:
1 Room temperature 27 °C d.b./19 °C w.b.; Chilled water (in/out) 7/12 °C.
2 Room temperature 20 °C d.b.; Hot water (in/out) 45/40 °C
5 Unit in standard configuration/execution, without optional accessories.
6 Values in compliance with EN14511-3:2013.
7 Values in compliance with [REGULATION (EU) N. 2016/2281]
Certified data in EUROVENT

i-HWD2 / DLIO-DFIO			102	202	302	402	502	602	702	802	902
ELECTRICAL DATA											
Power supply		V/ph/Hz	230/1/50	230/1/50	230/1/50	230/1/50	230/1/50	230/1/50	230/1/50	230/1/50	230/1/50
2 PIPES SYSTEM CONFIGURATION											
ENERGY EFFICIENCY											
COOLING (EN14511 VALUE)											
FCEER	(1)(6)	kW/kW	84	69	95	87	71	90	0	0	0
FCEER Class			B	B	A	A	B	A	G	G	G
HEATING ONLY (EN14511 VALUE)											
FCCOP	(2)(6)	kW/kW	104	87	112	109	91	109	0	0	0
FCCOP Class			A	A	A	A	A	A	G	G	G
PERFORMANCE											
MIN SPEED											
ESP External Static Pressure	(6)	Pa	14	20	20	8	14	14	19	27	27
Fan Power Input	(6)	W	42,1	58,9	54,8	43,0	64,8	71,9			
Air flow rate	(6)	m³/h	732	850	849	980	1294	1284	2473	2885	2854
Total capacity in cooling mode		kW	4,41	5,29	6,60	5,60	7,40	9,89	11,6	15,5	18,8
Total Net Cooling Capacity	(1)(6)(7)	kW	4,32	5,20	6,50	5,48	7,27	9,75			
Sensible capacity in cooling mode		kW	3,62	4,39	4,70	4,56	6,17	6,89	9,27	12,1	13,8
Net sensible cooling capacity	(1)(6)(7)	kW	3,53	4,29	4,61	4,45	6,04	6,76			
Net latent power in cooling	(1)(6)(7)	kW	0,79	0,90	1,90	1,03	1,23	2,99			
Max water flow		l/s	0,21	0,25	0,32	0,27	0,35	0,47	0,56	0,74	0,90
Pressure Drop in cooling mode	(1)	kPa	15	20	20	7	11	13			
Total capacity (heating mode)		kW	4,95	5,99	6,93	6,28	8,37	10,5	14,0	18,9	21,3
Total Net Heating Capacity	(2)(6)	kW	4,93	6,00	6,93	6,24	8,36	10,5			
Water flow in heating mode		l/s	0,24	0,29	0,33	0,30	0,40	0,51	0,68	0,91	1,03
Pressure drop in heating mode	(2)	kPa	20	26	23	9	15	15			
Sound Pressure on inlet side Lp (IR)		dB(A)	38	42	44	38	43	45	40	48	49
Sound Power on inlet side Lw (IR)		dB(A)	48	53	55	49	54	56			
Sound Pressure on outlet side Lp (OD)		dB(A)	37	40	41	34	37	41	36	44	45
Sound Power on outlet side Lw (OD)		dB(A)	47	51	52	44	48	52			
MED SPEED											
ESP External Static Pressure	(6)	Pa	30	38	38	23	34	35	35	39	40
Fan Power Input	(6)	W	82,6	120	107	123	205	209			
Air flow rate	(6)	m³/h	1077	1189	1174	1685	2044	2023	3336	3474	3427
Total capacity in cooling mode		kW	5,74	6,45	8,11	8,37	10,2	13,7	14,5	17,7	21,3
Total Net Cooling Capacity	(1)(6)(7)	kW	5,58	6,24	7,86	8,05	9,82	13,2			
Sensible capacity in cooling mode		kW	4,83	5,52	5,90	7,14	8,93	9,80	11,9	14,1	15,9
Net sensible cooling capacity	(1)(6)(7)	kW	4,66	5,26	5,68	6,82	8,48	9,36			
Net latent power in cooling	(1)(6)(7)	kW	0,92	0,97	2,18	1,23	1,33	3,82			
Max water flow		l/s	0,27	0,31	0,39	0,40	0,49	0,65	0,69	0,85	1,02
Pressure Drop in cooling mode	(1)	kPa	26	30	30	15	22	24			
Total capacity (heating mode)		kW	6,57	7,46	8,68	9,58	11,8	14,9	17,9	22,0	24,6
Total Net Heating Capacity	(2)(6)	kW	6,55	7,44	8,63	9,45	11,7	14,8			
Water flow in heating mode		l/s	0,32	0,36	0,42	0,46	0,57	0,72	0,86	1,06	1,19
Pressure drop in heating mode	(2)	kPa	34	40	35	20	29	29			
Sound Pressure on inlet side Lp (IR)		dB(A)	48	50	51	50	52	53	52	53	54
Sound Power on inlet side Lw (IR)		dB(A)	58	60	61	60	62	63			
Sound Pressure on outlet side Lp (OD)		dB(A)	47	48	49	47	48	49	49	50	51
Sound Power on outlet side Lw (OD)		dB(A)	57	58	59	57	58	59			
MAX SPEED											
ESP External Static Pressure	(6)	Pa	41	46	46	38	45	45	46	46	46
Fan Power Input	(6)	W	116	149	132	211	284	275			
Air flow rate	(6)	m³/h	1251	1299	1280	2146	2342	2299	3829	3746	3710
Total capacity in cooling mode		kW	6,20	6,85	8,64	9,85	11,3	15,0	15,9	18,6	22,3
Total Net Cooling Capacity	(1)(6)(7)	kW	5,89	6,56	8,33	9,15	10,6	14,1			
Sensible capacity in cooling mode		kW	5,37	6,02	6,33	8,64	10,0	10,8	13,1	14,9	16,7
Net sensible cooling capacity	(1)(6)(7)	kW	4,98	5,72	6,04	7,91	9,29	10,1			
Net latent power in cooling	(1)(6)(7)	kW	0,91	0,83	2,28	1,24	1,29	4,02			
Max water flow		l/s	0,30	0,33	0,41	0,47	0,54	0,72	0,76	0,89	1,07
Pressure Drop in cooling mode	(1)	kPa	29	33	34	20	25	28			
Total capacity (heating mode)		kW	7,18	7,96	9,28	11,4	13,1	16,4	19,8	23,2	25,9
Total Net Heating Capacity	(2)(6)	kW	7,04	7,94	9,20	11,0	12,9	16,0			
Water flow in heating mode		l/s	0,35	0,38	0,45	0,55	0,63	0,79	0,95	1,12	1,25
Pressure drop in heating mode	(2)	kPa	40	46	40	27	35	34			
Sound Pressure on inlet side Lp (IR)		dB(A)	51	51	52	54	54	55	54	54	55
Sound Power on inlet side Lw (IR)		dB(A)	61	62	63	64	65	66			
Sound Pressure on outlet side Lp (OD)		dB(A)	50	50	50	50	50	51	51	51	52
Sound Power on outlet side Lw (OD)		dB(A)	60	61	61	60	61	62			
SIZE AND WEIGHT											
A	(5)	mm	880	880	880	1280	1280	1280	1680	1680	1680
B	(5)	mm	605	605	605	605	605	605	605	605	605
H	(5)	mm	275	275	275	275	275	275	275	275	275
Operating weight	(5)	kg	37	38	40	52	54	57	68	70	73

Notes:
1 Room temperature 27 °C d.b./19 °C w.b.; Chilled water (in/out) 7/12 °C.
2 Room temperature 20 °C d.b.; Hot water (in/out) 45/40 °C
5 Unit in standard configuration/execution, without optional accessories.
6 Values in compliance with EN14511-3:2013.
7 Values in compliance with [REGULATION (EU) N. 2016/2281]
Certified data in EUROVENT

i-HWD2 / DLIV-DFIV			104	204	404	504	704	804
ELECTRICAL DATA								
Power supply		V/ph/Hz	230/1/50	230/1/50	230/1/50	230/1/50	230/1/50	230/1/50
4 PIPES SYSTEM CONFIGURATION								
ENERGY EFFICIENCY								
COOLING (EN14511 VALUE)								
FCEER	(1)(6)	kW/kW	82	68	85	69	0	0
FCEER Class			B	B	A	B	G	G
HEATING ONLY (EN14511 VALUE)								
FCCOP	(2)(6)	kW/kW	80	65	89	70	0	0
FCCOP Class			B	B	A	B	G	G
PERFORMANCE								
MIN SPEED								
ESP External Static Pressure	(6)	Pa	19	20	8	14	19	27
Fan Power Input	(6)	W	59,8	63,0	44,8	68,1		
Air flow rate	(6)	m³/h	863	850	980	1294	2473	2885
Total capacity in cooling mode		kW	4,98	5,29	5,60	7,42	11,6	15,5
Total Net Cooling Capacity	(1)(6)(7)	kW	4,89	5,19	5,48	7,29		
Sensible capacity in cooling mode		kW	4,12	4,40	4,56	6,18	9,28	12,1
Net sensible cooling capacity	(1)(6)(7)	kW	4,04	4,30	4,45	6,05		
Net latent power in cooling	(1)(6)(7)	kW	0,85	0,90	1,03	1,23		
Max water flow		l/s	0,24	0,25	0,27	0,35	0,56	0,74
Pressure Drop in cooling mode	(1)	kPa	20	20	7	12		
Total capacity (heating mode)		kW	4,23	4,33	5,06	6,28	10,9	12,3
Total Net Heating Capacity	(2)(6)	kW	4,26	4,36	5,03	6,30		
Water flow in heating mode		l/s	0,10	0,11	0,12	0,15	0,27	0,30
Pressure drop in heating mode	(2)	kPa	7	7	5	7		
Sound Pressure on inlet side Lp (IR)		dB(A)	43	42	38	43	40	48
Sound Power on inlet side Lw (IR)		dB(A)	54	53	49	54		
Sound Pressure on outlet side Lp (OD)		dB(A)	42	40	34	37	36	0
Sound Power on outlet side Lw (OD)		dB(A)	53	51	44	48		
MED SPEED								
ESP External Static Pressure	(6)	Pa	41	38	23	34	35	39
Fan Power Input	(6)	W	131	128	128	221		
Air flow rate	(6)	m³/h	1251	1189	1685	2044	3336	3474
Total capacity in cooling mode		kW	6,19	6,44	8,35	10,3	14,5	17,7
Total Net Cooling Capacity	(1)(6)(7)	kW	6,00	6,21	8,02	9,80		
Sensible capacity in cooling mode		kW	5,41	5,56	7,13	8,96	11,8	14,0
Net sensible cooling capacity	(1)(6)(7)	kW	5,19	5,29	6,80	8,49		
Net latent power in cooling	(1)(6)(7)	kW	0,81	0,92	1,22	1,31		
Max water flow		l/s	0,30	0,31	0,40	0,49	0,69	0,84
Pressure Drop in cooling mode	(1)	kPa	30	29	15	22		
Total capacity (heating mode)		kW	5,59	5,57	7,61	9,05	13,8	14,1
Total Net Heating Capacity	(2)(6)	kW	5,65	5,58	7,52	9,02		
Water flow in heating mode		l/s	0,14	0,14	0,19	0,22	0,33	0,34
Pressure drop in heating mode	(2)	kPa	12	12	10	13		
Sound Pressure on inlet side Lp (IR)		dB(A)	51	50	50	52	52	53
Sound Power on inlet side Lw (IR)		dB(A)	62	60	60	62		
Sound Pressure on outlet side Lp (OD)		dB(A)	50	48	47	48	49	0
Sound Power on outlet side Lw (OD)		dB(A)	61	58	57	58		
MAX SPEED								
ESP External Static Pressure	(6)	Pa	48	46	38	45	46	46
Fan Power Input	(6)	W	165	158	227	304		
Air flow rate	(6)	m³/h	1359	1299	2146	2342	3829	3746
Total capacity in cooling mode		kW	6,56	6,85	9,86	11,3	15,9	18,7
Total Net Cooling Capacity	(1)(6)(7)	kW	6,32	6,55	9,13	10,6		
Sensible capacity in cooling mode		kW	5,77	6,02	8,67	10,0	13,1	14,9
Net sensible cooling capacity	(1)(6)(7)	kW	5,53	5,72	7,91	9,27		
Net latent power in cooling	(1)(6)(7)	kW	0,79	0,84	1,22	1,29		
Max water flow		l/s	0,31	0,33	0,47	0,54	0,76	0,89
Pressure Drop in cooling mode	(1)	kPa	34	33	20	25		
Total capacity (heating mode)		kW	5,94	5,90	9,14	9,85	15,2	15,0
Total Net Heating Capacity	(2)(6)	kW	6,03	5,95	8,89	9,87		
Water flow in heating mode		l/s	0,14	0,14	0,22	0,24	0,37	0,36
Pressure drop in heating mode	(2)	kPa	13	13	13	16		
Sound Pressure on inlet side Lp (IR)		dB(A)	52	51	54	54	54	54
Sound Power on inlet side Lw (IR)		dB(A)	63	62	64	65		
Sound Pressure on outlet side Lp (OD)		dB(A)	51	50	50	50	51	0
Sound Power on outlet side Lw (OD)		dB(A)	62	61	61	61		
SIZE AND WEIGHT								
A	(5)	mm	880	880	1280	1280	1680	1680
B	(5)	mm	630	630	630	630	630	630
H	(5)	mm	275	275	275	275	275	275
Operating weight	(5)	kg	39	40	55	57	72	74

Notes:
1 Room temperature 27 °C d.b./19 °C w.b.; Chilled water (in/out) 7/12 °C.
2 Room temperature 20 °C d.b.; Hot water (in/out) 45/40 °C
5 Unit in standard configuration/execution, without optional accessories.
6 Values in compliance with EN14511-3:2013.
7 Values in compliance with [REGULATION (EU) N. 2016/2281]
Certified data in EUROVENT

i-HWD2 / DLIO-DFIO			104	204	404	504	704	804
ELECTRICAL DATA								
Power supply		V/ph/Hz	230/1/50	230/1/50	230/1/50	230/1/50	230/1/50	230/1/50
4 PIPES SYSTEM CONFIGURATION								
ENERGY EFFICIENCY								
COOLING (EN14511 VALUE)								
FCEER	(1)(6)	kW/kW	82	68	85	69	0	0
FCEER Class			B	B	A	B	G	G
HEATING ONLY (EN14511 VALUE)								
FCCOP	(2)(6)	kW/kW	80	65	89	70	0	0
FCCOP Class			B	B	A	B	G	G
PERFORMANCE								
MIN SPEED								
ESP External Static Pressure	(6)	Pa	19	20	8	14	19	27
Fan Power Input	(6)	W	59,8	63,0	44,8	68,1		
Air flow rate	(6)	m³/h	863	850	980	1294	2473	2885
Total capacity in cooling mode		kW	4,98	5,29	5,60	7,42	11,6	15,5
Total Net Cooling Capacity	(1)(6)(7)	kW	4,89	5,19	5,48	7,29		
Sensible capacity in cooling mode		kW	4,12	4,40	4,56	6,18	9,28	12,1
Net sensible cooling capacity	(1)(6)(7)	kW	4,04	4,30	4,45	6,05		
Net latent power in cooling	(1)(6)(7)	kW	0,85	0,90	1,03	1,23		
Max water flow		l/s	0,24	0,25	0,27	0,35	0,56	0,74
Pressure Drop in cooling mode	(1)	kPa	20	20	7	12		
Total capacity (heating mode)		kW	4,23	4,33	5,06	6,28	10,9	12,3
Total Net Heating Capacity	(2)(6)	kW	4,26	4,36	5,03	6,30		
Water flow in heating mode		l/s	0,10	0,11	0,12	0,15	0,27	0,30
Pressure drop in heating mode	(2)	kPa	7	7	5	7		
Sound Pressure on inlet side Lp (IR)		dB(A)	43	42	38	43	40	48
Sound Power on inlet side Lw (IR)		dB(A)	54	53	49	54		
Sound Pressure on outlet side Lp (OD)		dB(A)	42	40	34	37	36	0
Sound Power on outlet side Lw (OD)		dB(A)	53	51	44	48		
MED SPEED								
ESP External Static Pressure	(6)	Pa	41	38	23	34	35	39
Fan Power Input	(6)	W	131	128	128	221		
Air flow rate	(6)	m³/h	1251	1189	1685	2044	3336	3474
Total capacity in cooling mode		kW	6,19	6,44	8,35	10,3	14,5	17,7
Total Net Cooling Capacity	(1)(6)(7)	kW	6,00	6,21	8,02	9,80		
Sensible capacity in cooling mode		kW	5,41	5,56	7,13	8,96	11,8	14,0
Net sensible cooling capacity	(1)(6)(7)	kW	5,19	5,29	6,80	8,49		
Net latent power in cooling	(1)(6)(7)	kW	0,81	0,92	1,22	1,31		
Max water flow		l/s	0,30	0,31	0,40	0,49	0,69	0,84
Pressure Drop in cooling mode	(1)	kPa	30	29	15	22		
Total capacity (heating mode)		kW	5,59	5,57	7,61	9,05	13,8	14,1
Total Net Heating Capacity	(2)(6)	kW	5,65	5,58	7,52	9,02		
Water flow in heating mode		l/s	0,14	0,14	0,19	0,22	0,33	0,34
Pressure drop in heating mode	(2)	kPa	12	12	10	13		
Sound Pressure on inlet side Lp (IR)		dB(A)	51	50	50	52	52	53
Sound Power on inlet side Lw (IR)		dB(A)	62	60	60	62		
Sound Pressure on outlet side Lp (OD)		dB(A)	50	48	47	48	49	0
Sound Power on outlet side Lw (OD)		dB(A)	61	58	57	58		
MAX SPEED								
ESP External Static Pressure	(6)	Pa	48	46	38	45	46	46
Fan Power Input	(6)	W	165	158	227	304		
Air flow rate	(6)	m³/h	1359	1299	2146	2342	3829	3746
Total capacity in cooling mode		kW	6,56	6,85	9,86	11,3	15,9	18,7
Total Net Cooling Capacity	(1)(6)(7)	kW	6,32	6,55	9,13	10,6		
Sensible capacity in cooling mode		kW	5,77	6,02	8,67	10,0	13,1	14,9
Net sensible cooling capacity	(1)(6)(7)	kW	5,53	5,72	7,91	9,27		
Net latent power in cooling	(1)(6)(7)	kW	0,79	0,84	1,22	1,29		
Max water flow		l/s	0,31	0,33	0,47	0,54	0,76	0,89
Pressure Drop in cooling mode	(1)	kPa	34	33	20	25		
Total capacity (heating mode)		kW	5,94	5,90	9,14	9,85	15,2	15,0
Total Net Heating Capacity	(2)(6)	kW	6,03	5,95	8,89	9,87		
Water flow in heating mode		l/s	0,14	0,14	0,22	0,24	0,37	0,36
Pressure drop in heating mode	(2)	kPa	13	13	13	16		
Sound Pressure on inlet side Lp (IR)		dB(A)	52	51	54	54	54	54
Sound Power on inlet side Lw (IR)		dB(A)	63	62	64	65		
Sound Pressure on outlet side Lp (OD)		dB(A)	51	50	50	50	51	0
Sound Power on outlet side Lw (OD)		dB(A)	62	61	60	61		
SIZE AND WEIGHT								
A	(5)	mm	880	880	1280	1280	1680	1680
B	(5)	mm	605	605	605	605	605	605
H	(5)	mm	275	275	275	275	275	275
Operating weight	(5)	kg	39	40	55	57	72	74

Notes:
1 Room temperature 27 °C d.b./19 °C w.b.; Chilled water (in/out) 7/12 °C.
2 Room temperature 20 °C d.b.; Hot water (in/out) 45/40 °C
5 Unit in standard configuration/execution, without optional accessories.
6 Values in compliance with EN14511-3:2013.
7 Values in compliance with [REGULATION (EU) N. 2016/2281]
Certified data in EUROVENT

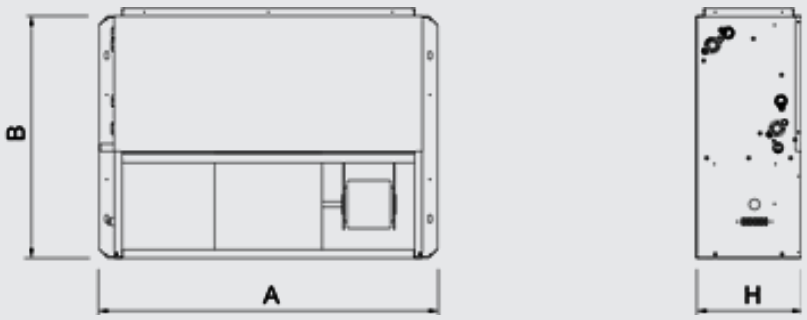
B
A
H

HYDRONIC TERMINALS

HRD2 050 - 410

High efficiency Heat Recovery Units 3,68-31,4 kW

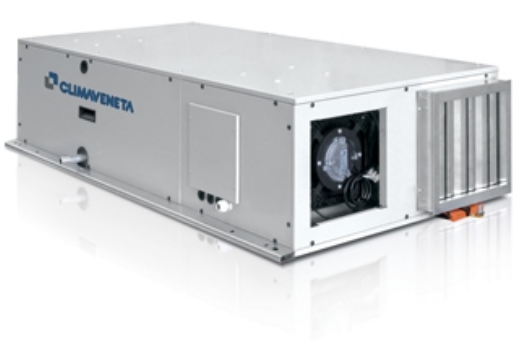

The HRD2 heat recovery unit s are developed for installation in commercial and service sector such as offices, bars, restaurants, meeting rooms, shops, schools, gyms, and in general in all facilities where the energy cost reduction is of high importance. In modern air-conditioning and air treatment systems is necessary to create forced ventilation which involves air conditioned expelling, with high energy consumption and high costs. HRD2 heat recovery units, using a high efficiency aluminum static heat recovery, can solve this problem by saving more than 70% of the energy that would otherwise be lost with the expelled stale air. These units may be integrated with traditional systems such as fan coils, water coolers or radiators, and can operate both in summer and in winter. The range HRD2 is recommended for suspended ceiling installation and can be ducted to allow the fresh air intake and distribution.

Version

OL	Horizontal installation, left air supply
OR	Horizontal Installation with right air supply
VL	Vertical Installation with left air supply
VR	Vertical installation, right air supply

Features

High efficiency counterflow heat recovery with aluminium heat exchanger plates, supplementary sealing and built-in motorized by pass device. Aluminium drain pan, fitted with 1/2" condensation outlet (on side for horizontal units and bottom for vertical units). High Efficiency >75% on dry conditions. All sizes are Eurovent Certified

Plug Fan Direct driven EC motor with Brushless tecnology. Plastic fiber glass reinforced impeller for size 05 to size 10, and aluminium impeller for bigger sizes.

Self -supporting steel structure, made of 25 mm double pannels with galvanized steel pannel internaly and RAL9002 painted pannel externally. Inspection doors and panels. For horizontal installations longitudinal steel brackets are supplied for ceiling installation, while for vertical installation (floor installation), galvanized steel feet are supplied as standard.

Motorized Bypass Dumper for Free Cooling and Free Heating taking advantage of favorable external temperature conditions.

Mineral Wool Thermal and acoustic insulation

Compact filters M5 efficiency class on return air, F7 efficiency class on fresh air, easy removable from bottom and side panels. Efficiency according to EN 779:2012

Built-in electric box with electronic controller for a complete control of all typical functions of the units

Accessory

- Internal electrical pre and post heater
- External section with changeover watercoil
- Motorized adjusting Dumpers
- 3 Way valve with modulating actuator
- Roof cover for vertical and horizontal units
- Air filter pressure switch
- Ducted CO2 sensor
- Air pressure sensor
- Anti-vibration junction
- Round connections

Controls

Wall mounted Control for Heat Recovery units HRD2 CR

Manual/Automatic control of EC fans. Modulating control of water valve. Electric heater control (both pre and post heating) . Heat recovery defrost contol. Free Cooling on/off mode control. Filter pressure switch managment. Fan management by CO2 sensor. Fan management by 1 pressure sensor. Weekly programming. Alarm management. Remore summer/winter mode. EC fan motors management by fire alarm digital input. BMS by Modbus protocol and RS485 connection. Remote display with internal temperature sensor.

HRD2			050	090	140	210	300	410
ELECTRICAL DATA								
Power supply		V/ph/Hz	230/1/50	230/1/50	230/1/50	230/1/50	400/3+N/50	400/3+N/50
Fan Power Input		W	327	339	904	930	1841	1910
Max absorbed power		W	340	340	920	930	2000	2000
Overall current input Nominal		A						
Absorbed current		A	2,80	2,90	6,00	6,00	3,40	3,50
Fan speed control		V						
PERFORMANCE								
Air flow rate		m³/h	426	776	1230	1843	2720	3685
Air flow rate		m³/s						
ESP External Static Pressure	(1)	Pa	218	153	265	172	194	200
Sound Pressure on inlet side Lp (IR)	(2)	dB(A)	53	52	53	60	62	60
Sound Pressure on outlet side Lp (OD)	(2)	dB(A)	61	60	61	68	70	68
Efficiency of Heat recovery	(3)	%	86,2	86,9	83,7	85,3	84,8	85,0
Total capacity (heating mode)	(3)	kW	3,68	6,77	10,3	15,8	23,2	31,4
Heat recovery outlet temperature	(3)	°C	16,3	16,5	15,6	16,0	15,9	16,0
CONFORMITY TO (EU 1253/2014)								
Efficiency of Heat recovery	(4)	%	81,4	80,1	77,9	77,4	76,8	76,8
Efficiency bonus		W/m3/s	252	213	147	132	114	114
Filter correction factor								
SFP internal limit		W/m3/s	1337	1283	1201	1162	1113	1078
Total internal air pressure drop	(4)	Pa	601	679	570	583	633	636
Overall fan static efficiency	(5)	%	45,0	53,1	47,5	50,7	59,0	59,2
SFP internal		W/m3/s	1336	1279	1200	1150	1073	1074
SIZE AND WEIGHT								
A	(6)	mm	1350	1470	1850	1850	2150	2150
B	(6)	mm	680	820	1030	1460	1460	1840
H	(6)	mm	330	370	455	455	590	590
Operating weight	(6)	kg	85	105	175	235	290	360

Notes:
1 Fresh air/supply air circuit.
2 Sound pressure level in free field on a reflective surface, 1 m from fan front and 1 m from the ground. Non -binding value obtained fron sound power level.
3 Size valued in the following hypothesis at wet conditions: outside air temp. -7°C 80% RH; room air temperature 20°C; 55% RH
4 Size valued in the following hypothesis at dry conditions: outside air temperature 5°C; room air temperature 25°C
5 Including motor&speed controller efficiency
6 Unit in standard configuration/execution, without optional accessories.

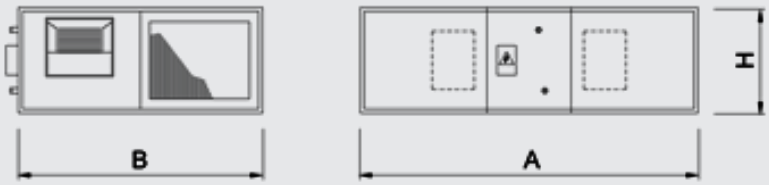

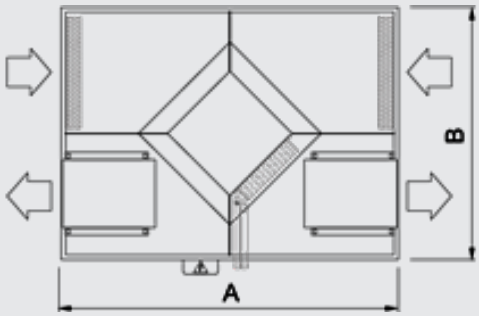

ROOFTOP UNITS

WTA 0021 - 0126

Autonomous fresh air unit 13,2-76,3 kW



Features

HIGH ENERGY EFFICIENCY

The combination of both an active and a static heat recovery system ensures the extraction of all the energy contained in the exhaust air. The smart management of both the free cooling system and the by-pass of the static heat recovery eliminates all the unnecessary energy waste and optimizes the unit function.

PLUG & PLAY APPROACH

Everything needed for the air renewal is inside a single and compact structure, where all the spaces are utilized to ensure easy access to internal components. Transportation and installation is greatly simplified, operation times are halved and the calibration phase is completely eliminated.

HIGHLY PRECISE CONTINUOUS REGULATION

Advanced control logics and technical components with high-capacity adjustment, such as EC plug fans and inverter driven compressors, perfectly answer the various thermal and renewal air requirements. The continuous and precise modulation of all of the resources provide perfect ambient comfort and a drastic drop in energy consumption.

PLANT SIMPLIFICATION

The plant is simplified with the use of the autonomous WTA units. The ambient air conditioning system is no longer in charge of treating fresh air. Cooling and heating units can be resized, expensive duct and fluids distribution works can be eliminated and plant lay-out simplified.

Accessory

- High efficiency filters: electronic or rigid pocket F7
- Air flow regulation with CO2 or CO2+VOC probe
- Pre-treatment water coil to extend the working limits
- Compressor box insulation
- Set-up for remote connectivity with ModBus/Echelon protocol cards
- Remote control keyboard (distance to 200m and to 500m)

WTA units are autonomous fresh air units that treat external air and supply it into the environment at neutral conditions. They are suitable both for internal and external installation. WTA units can be combined with different air conditioning systems, like hydronic or direct expansion, and in different applications, like offices, schools, hospitals and shops.
Hermetic inverter driven scroll compressor, with R410A refrigerant, single refrigerant circuit, aluminum structure and coated galvanized steel base. Air treatment section with sandwich panel, plug fans and double heat recovery, both static and thermodynamic, to recover the exhaust air energy and increase the unit's efficiency.

Controls

AIR3000TE

The AIR3000 TE controller offers advanced functions and algorithms. It is made up by two control boards, dedicated to the air side and the refrigerant side respectively. The keypad features functional controls and a complete LCD display that allows for unit monitoring and intervention by means of a multilevel menu with a selectable user language. Temperature control is based on PID logic according to the supply temperature set point. It is possible to have set point compensation according to outdoor temperature, both in winter and summer. The operating mode of the unit, cooling/heating/free cooling, is managed automatically. Constant air volume ventilation control is standard: as pressure drop varies, the fans change speed to maintain flow-rate at the design value for the system, according to how dirty the filters are. As an option the air flow can be managed according to a CO2 or CO2 + VOC probe. The controller can also integrate and automatically manage different optional devices: pre-treatment coil, electric heater, gas-fired heating module, humidifier. Unloading modulation function is available for part-load refrigerant circuit operation in critical conditions. Supervision is available with different options, using proprietary
devices or by integration with third party systems using ModBus, BACnet, BACnet-over-IP and Echelon LonWorks protocols. Compatible with remote keypad (management of up to 8 units). The timer can be used to create an operating profile with up to 4 typical days and 10 different time bands.



WTA			0021	0026	0033	0041	0051	0064	0080	0100	0126
COOLING											
Total cooling capacity	(1)	kW	13,2	16,2	20,9	27,2	32,4	39,7	51,1	64,6	76,3
Total sensible capacity	(1)	kW	3,00	3,70	4,70	6,20	7,70	9,70	12,0	15,0	18,9
Heat recovery cooling capacity	(1)	kW	3,70	5,40	7,00	8,60	10,8	13,9	16,7	20,5	20,4
Compressors power input	(1)	kW	12,7	14,0	19,7	23,2	27,9	32,3	41,0	51,9	66,2
HEATING											
Total heating capacity	(2)	kW	2100	2600	3300	4100	5100	6400	8000	10000	12600
Heat recovery heating capacity	(2)	kW	250	250	250	250	250	250	250	250	250
Compressors power input	(2)	kW	2100	2600	3300	4100	5100	6400	8000	10000	12600
SUPPLY FANS											
Supply air flow rate		m³/h	1	1	1	1	2	2	2	3	4
External static pressure	(3)	Pa	0	0	0	0	0	0	0	0	0
Total power input		kW	84,0	86,0	89,0	87,0	92,0	90,0	90,0	90,0	92,0
RETURN/EXPULSION FAN											
Return air flow rate		m³/h	1260	1260	1260	1500	1500	1500	2300	2300	2300
External static pressure	(3)	Pa	0	0	0	0	0	0	0	0	0
Total power input		kW	84,0	86,0	89,0	87,0	92,0	90,0	90,0	90,0	92,0
REFRIGERANT CIRCUIT											
No. Compressors/No. Circuits		N°	1700	1700	1700	2250	2250	2250	2250	2250	2250
Refrigerant charge		kg	1260	1260	1260	1500	1500	1500	2300	2300	2300
NOISE LEVEL											
Sound Power	(4)	dB(A)	84	86	89	87	92	90	90	90	92
SIZE											
Length A		mm	3220	3220	3220	3520	3520	3520	3520	3520	3520
Width B		mm	1700	1700	1700	2250	2250	2250	2250	2250	2250
Height H		mm	1260	1260	1260	1500	1500	1500	2300	2300	2300
Operating weight	(5)	kg	Non un numero	Non un numero	Non un numero	Non un numero	Non un numero	Non un numero	Non un numero	Non un numero	Non un numero

Notes:
1 Cooling: Outdoor: 0°C 0% U.R. / Indoor: 0°C 0% U.R. / Supply: 0°C.
2 Heating: Outdoor 0°C 0% U.R. / Indoor 0°C 0% U.R. / Supply 0°C.
3 ESP for standard configuration (optional accessories not included/calculated).
4 Sound power on the basis of measurements made in compliance with ISO 9614.
5 Unit in AR configuration and standard execution, without optional accessories.
The units highlighted in this publication contain HFC R410A [GWP_{100} 2088] fluorinated greenhouse gases.

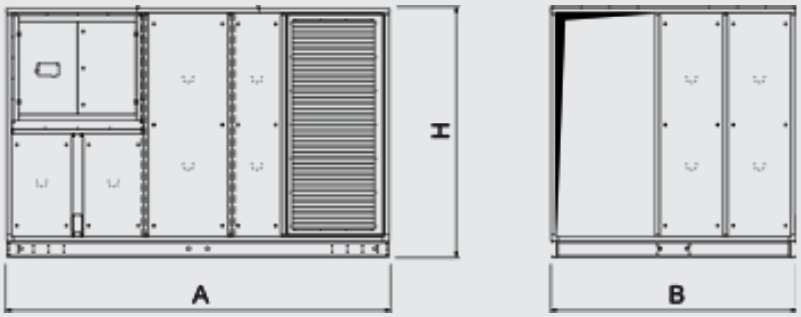

<<< BACK INDEX

CONTROL, SUPERVISION AND OPTIMISATION SYSTEMS

CONTROL, SUPERVISION
AND OPTIMISATION SYSTEMS

CONTROL, SUPERVISION AND OPTIMISATION SYSTEMS

ClimaPRO

Chiller Plant Control with Active Optimization System ClimaPRO System Manager



Version

CPMV	Version featuring Measurement & Performance Verification
CPCO	Version featuring Control & Active Optimization

Features

- Acquisition of real-time data from the plant
- Measurement of energy indexes for the units and the entire system
- Energy reporting
- Chart building for trend analysis
- Supervisory and control for the units and the main field components
- Active Optimization based on real time data measurement

ClimaPRO System Manager represents the state-of-the-art platform for chiller plant management and control.
ClimaPRO ensures to actively optimize the entire chiller plant by managing and adjusting each component directly involved in the production and the distribution of the heating and the cooling energies, therefore involving chillers and heat pumps, pumping groups as well as the source-side devices like, for example, the cooling towers.

In particular, ClimaPRO measures in real-time all the operating variables from the field, for each individual device and each of the main system branche, by using serial communication lines as well as dedicated analogue signals.

The acquired data are then compared with the design data of each single unit at any different working conditions, thus allowing to implement control strategies based on dynamic algorithms which take into account the real operating conditions.

On the basis of these values, an advanced diagnostic module also allows to assess the level of efficiency for each individual unit, translating data into easy-to-read information in order to simplify and optimize the maintenance activities.

The “Chart Builder” software module allows to display the trends of the main operating variables. The “Reporting” module allows to send reports to selected users, including data and system’s status of the main devices as well as to perform calculation of the energy indexes for each single unit and for the entire chiller plant.

The accessibility to ClimaPRO System Manager is ensured by an integrated web server that makes it visible from any computer equipped with a web browser, either locally or remotely.

CONTROL, SUPERVISION AND OPTIMISATION SYSTEMS

MANAGER 3000

Group regulation device MANAGER 3000



Version

2P	for 2-pipe plants
4P	for 4-pipe system
2P+VPF	for 2-pipe systems with VPF or VPF.D (variable primary flow)
4P+VPF	for 4-pipe systems with VPF or VPF.D (variable primary flow)

Features

- Ease of installation thanks to the all-in-one solution
- 8.4” Touch-screen display, 65536 colours
- Security - password-protected data access
- Multi-language interface
- Possibility of selecting the type of regulation and the reference probe for regulation
- Possibility of selecting the type of distribution of the requests of the group regulation device to the machines according to the needs of the system
- Some units can be given priority
- Possibility of choosing the number of units on standby - dynamic standby
- Balancing of single unit operating hours
- Device and unit alarm display
- Management of an additional serial connection for the integration of existing BMS

The MANAGER 3000 is a centralised management and control system for a group of hydronic units such as Climaveneta chillers, heat pumps and energy raisers.

It can control up to 8 units, with the same or different power ratings, on 2- or 4-pipe systems. Regulation may be set according to the temperature read by the plant delivery or return probe, as required.

It is supplied in an industrial box complete with all components. The MANAGER 3000 has an 8.4” touch-screen user interface, allowing access to all information and the sending of commands with a few simple touches. Communication between MANAGER 3000 and the machines is accomplished by means of an RS485 serial connection. It has its own adjustment probes to be placed in suitably prepared pockets in the hydraulic system pipes.

Various additional options, to be chosen according to the characteristics, needs and availability of remote connection at the place of installation of the units, can be supplied in the same industrial box as the MANAGER 3000: modem/router for connection to a fixed ADSL line, modem for connection to a fixed PSTN, modem for connection to GPRS.

Options

Regulation of multiple units, 1 water circuit	X
Regulation of multiple units, two water circuits	X
Management of dynamic stand-by, priority, demand limit	X
Supervision via web pages	opt
Integration in bms / bas systems	opt
Access via lan	opt
Management of hydronic units	X
Max number of devices	8
User interface with display and commands	X
User interface with touch-screen and multi-language capabilities	X
Monitoring of alarms and unit status	X
Remote notification of alarms	opt
Log of main regulation variables and alarm events	opt
Built-in modem, gprs or pstn type	opt
Built-in adsl router	opt
Compatibility with systems with variable primary flow	opt

CONTROL, SUPERVISION AND OPTIMISATION SYSTEMS

SEQUENCER

Group regulation device SEQUENCER



Version

2P	for 2-pipe plants

Features

- Ease of installation thanks to the all-in-one solution
- Possibility of selecting the type of distribution of the requests of the SEQUENCER to the machines according to the needs of the system
- Distribution on several units or saturation of a single unit before asking for the next one
- Some units can be given priority
- Possibility of choosing the number of units on standby - dynamic standby
- Balancing of single unit operating hours
- Device and unit alarm display
- Management of an additional serial connection for the integration of existing BMS
- Daily/weekly scheduler

The Sequencer is a centralised management and control system for a group of hydronic chiller units, and heat pumps.

It can control up to 5 units, with similar or different capacities, in 2 pipe. Regulation may be set according to the temperature read by the system return probe.

It is supplied in an industrial box complete with all components. The sequencer dialogues with the units via a RS485 serial connection. It has its own adjustment probes to be placed in suitably prepared pockets in the hydraulic system pipes.

Options

Regulation of multiple units, 1 water circuit	X
Regulation of multiple units, two water circuits	X
Management of dynamic stand-by, priority, demand limit	X
Integration in bms / bas systems	opt
Management of hydronic units	X
Max number of devices	5
User interface with display and commands	X
Monitoring of alarms and unit status	X

CONTROL, SUPERVISION AND OPTIMISATION SYSTEMS

IDRORELAX

Device of supervision and control IDRORELAX

Version

IDRORELAX	|
Panel	Panel installation
Wall	Wall installation

Features

- Touch Screen interface, with TFT colour display, 5,7”
- Centralized management of the whole hydronic plant: terminals and units
- Integrated visualization of operating mode and temperatures, both for units and internal ambients
- Centralized optimization of the internal comfort: settings of the terminals operation based on daily or weekly schedule, area and crowding



IDRORELAX is a centralized device for supervision and control of plants which integrates together Climaveneta´s hydronic terminals and units.
Up to 224 elements can be connected, centralizing their management in one single point. Through Idrorelax infact, is possible to set the plant´s on/off and operating mode.
The Touch Screen interface has been conceived to assure an easy, intuitive and fast navigation through the diffent pages of the menu.
The Idrorelax´s control panel is available both wall-mounted and as simple panel, for the highest usage flexibility.

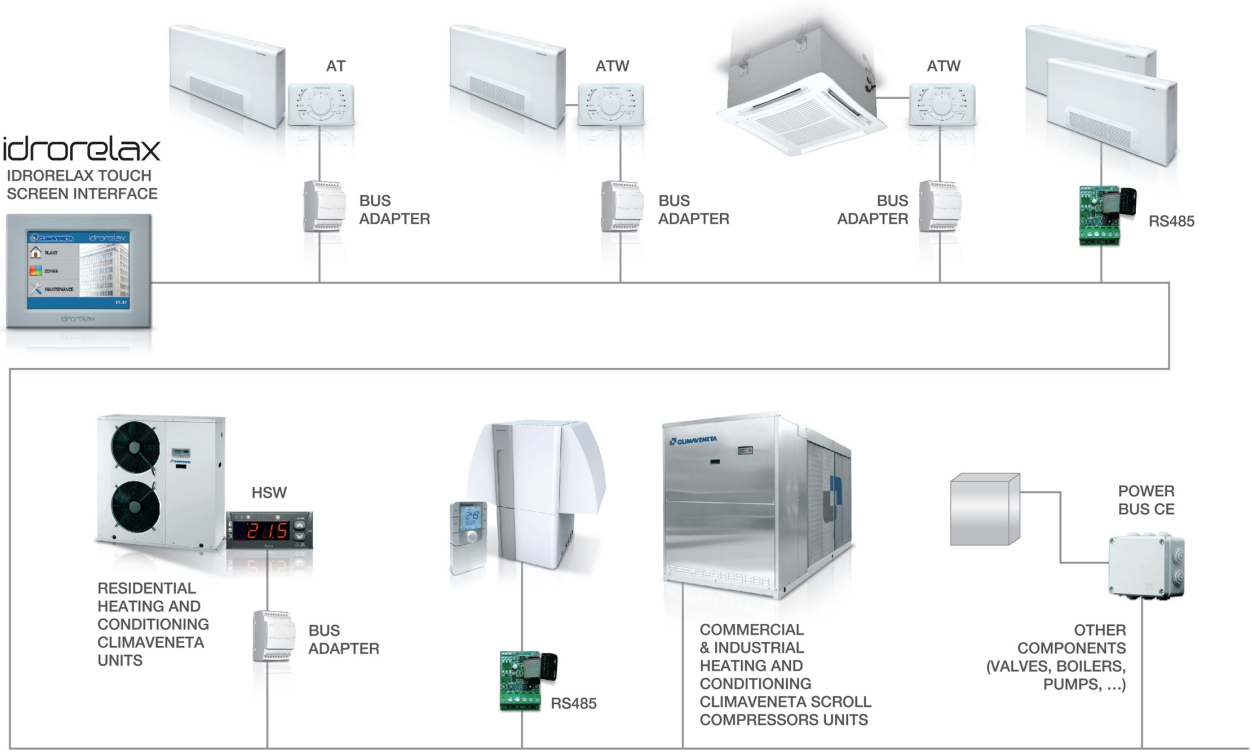

The diagram is purely representative. Refer to the available IDRORELAX technical documentation for more information about compatibility between the system and components.

BRAT-MC 0011 - 0121
HCAT 0152 - 0604
MCAT 0501 - 1422
NHCR 0011-21 - 0121
NCE 118A - 528B
FCE 218A - 828C

ANCILLARY PRODUCTS

ANCILLARY PRODUCTS

BRAT-MC 0011 - 0121

Condensing unit 5,61-33,4 kW



Outdoor split-system unit working with R410A refrigerant for connection with direct expansion coils or remote exchangers, with hermetic rotary scroll compressor and axial-flow fans. External panels and basement and base in galvanised sheet steel with paint finish.

Version

B	Basic
SL	Super-low noise version

Features

Coil protection grid for models 0011÷0061.
Structure and base in hot-dip galvanised steel with epoxy powder paint finish.
Control with foolproof device accessible from the outside.
Finned coils made with copper pipes and aluminium fins with large exchange surface area, tested for leaks with dried air at 30 bar.
User interface with display.
Phase sequence controller for models 0071÷0121

Accessory

- Rubber anti-vibration mounting kit
- Coil protection grid for models 0071÷0121
- External main switch kit
- HSW10 remote keyboard

Controls

HSW15 Electronic Controller
The HSW15 device is the new Climaveneta controller for the management of condensing units. The new 4-digit display offers clear reading of the variables in play, while the 14 symbols give an immediate view of machine states for system diagnostics. The 4 keys can be used to navigate the tree menu, access to which is password-protected for maximum security.
The electronic controller incorporates a series of protection algorithms in order to prevent damage being done to the main system components. The most important includes parameters concerning compressor start-up times in order to prevent over-frequent starting times (minimum delay after last stop and minimum delay after last start).
Condensation control is managed by modulating the air flow through the condensation coils by varying the ventilation speed. This allow to increase the unit's efficiency as well as improve the system quietness.

BRAT-MC / B			0011	0021	0025	0031	0041	0021
Power supply		V/ph/Hz	230/1/50	230/1/50	230/1/50	230/1/50	230/1/50	400/3/50
PERFORMANCE								
COOLING								
Cooling capacity	(1)	kW	5,61	6,69	7,51	9,60	12,7	6,09
Total power input	(1)	kW	1,87	2,18	2,48	3,34	4,15	2,09
EER	(1)	kW/kW	3,00	3,07	3,03	2,87	3,06	2,91
REFRIGERANT CIRCUIT								
Compressors nr.		N°	1	1	1	1	1	1
No. Circuits		N°	1	1	1	1	1	1
Refrigerant charge		kg						
NOISE LEVEL								
Sound Pressure	(2)	dB(A)	34	35	35	35	38	35
Sound power level in cooling	(3)(4)	dB(A)	65	66	66	66	69	66
SIZE AND WEIGHT								
A	(5)	mm	900	900	900	900	900	900
B	(5)	mm	370	370	370	370	370	370
H	(5)	mm	640	640	940	940	1240	640
Operating weight	(5)	kg	80	85	100	105	125	85

BRAT-MC / B			0025	0031	0041	0051	0061
Power supply		V/ph/Hz	400/3/50	400/3/50	400/3/50	400/3/50	400/3/50
PERFORMANCE							
COOLING							
Cooling capacity	(1)	kW	7,49	9,30	12,7	14,3	16,6
Total power input	(1)	kW	2,39	3,25	4,25	4,67	5,32
EER	(1)	kW/kW	3,13	2,86	2,99	3,06	3,12
REFRIGERANT CIRCUIT							
Compressors nr.		N°	1	1	1	1	1
No. Circuits		N°	1	1	1	1	1
Refrigerant charge		kg					
NOISE LEVEL							
Sound Pressure	(2)	dB(A)	35	35	38	38	38
Sound power level in cooling	(3)(4)	dB(A)	66	66	69	69	69
SIZE AND WEIGHT							
A	(5)	mm	900	900	900	900	900
B	(5)	mm	370	370	370	370	420
H	(5)	mm	940	940	1240	1240	1390
Operating weight	(5)	kg	100	105	125	145	155

Notes:
1 Saturated intake temperature (dew) 5 °C; Source (side) heat exchanger air (in) 35 °C.
2 Average sound pressure level at 10 (m.) distance, unit in a free field on a reflective surface; non-binding value calculated from the sound power level.
3 Sound power on the basis of measurements made in compliance with ISO 9614.
4 Sound power level in cooling, outdoors.
5 Unit in standard configuration/execution, without optional accessories.
The units highlighted in this publication contain HFC R410A [GWP_{100} 2088] fluorinated greenhouse gases.

BRAT-MC / SL			0071	0091	0101	0121
Power supply		V/ph/Hz	400/3/50	400/3/50	400/3/50	400/3/50
PERFORMANCE						
COOLING						
Cooling capacity	(1)	kW	20,1	22,7	27,8	33,4
Total power input	(1)	kW	6,90	8,02	8,86	11,8
EER	(1)	kW/kW	2,91	2,83	3,14	2,83
REFRIGERANT CIRCUIT						
Compressors nr.		N°	1	1	1	1
No. Circuits		N°	1	1	1	1
Refrigerant charge		kg				
NOISE LEVEL						
Sound Pressure	(2)	dB(A)	43	43	44	44
Sound power level in cooling	(3)(4)	dB(A)	74	74	76	76
SIZE AND WEIGHT						
A	(5)	mm	1450	1450	1450	1450
B	(5)	mm	550	550	550	550
H	(5)	mm	1200	1200	1700	1700
Operating weight	(5)	kg	245	250	320	325

Notes:
1 Saturated intake temperature (dew) 5 °C; Source (side) heat exchanger air (in) 35 °C.
2 Average sound pressure level at 10 (m.) distance, unit in a free field on a reflective surface; non-binding value calculated from the sound power level.
3 Sound power on the basis of measurements made in compliance with ISO 9614.
4 Sound power level in cooling, outdoors.
5 Unit in standard configuration/execution, without optional accessories.
The units highlighted in this publication contain HFC R410A [GWP_{100} 2088] fluorinated greenhouse gases.

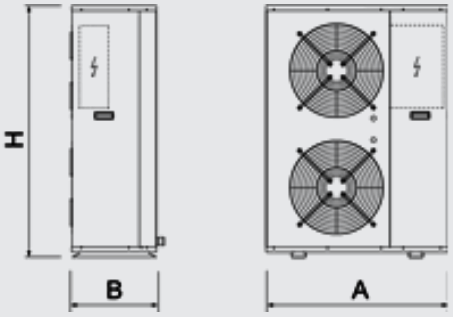
H
B
A

ANCILLARY PRODUCTS

HCAT 0152 - 0604

Condensing unit 37,7-170 kW



Outdoor split-system unit for connection with direct expansion coils or remote exchangers, with hermetic rotary scroll compressors, axial-flow fans, compressor inlet and outlet valves with servicing plugs and liquid tap. External panels in Peraluman and base in galvanised sheet steel with paint finish. Refrigerant R407C, units with two and four-compressors, two refrigerant circuits.

Version

B	Basic
HT	High efficiency, high outdoor temperature version
LN	Low noise
SL	Super-low noise version

Features

TOTAL VERSATILITY

Condensing units available in 4 versions, designed to satisfy all service system and application requirements.

CONTINUAL FAN SPEED CONTROL

The standard bi-compressor type HCAT units come fitted with continual fan speed control to guarantee more flexibility and adaptability

INTEGRAL SAFETY DEVICES

Standard units are all fitted with high and low pressure switches, high-pressure safety valve and magnetothermal circuit breakers on loads (bi-compressor unit only)

HCAT / B			0152	0182	0202	0252	0302	0412	0512	0524	0604
Power supply		V/ph/Hz	400/3+N/50	400/3+N/50	400/3+N/50	400/3+N/50	400/3+N/50	400/3+N/50	400/3+N/50	400/3/50	400/3/50
PERFORMANCE											
COOLING											
Cooling capacity	(1)	kW	37,7	47,0	54,7	66,5	79,8	112	139	141	160
Total power input	(1)	kW	14,5	17,9	20,3	25,3	29,6	38,0	46,3	55,6	64,7
EER	(1)	kW/kW	2,60	2,63	2,69	2,63	2,70	2,96	2,99	2,54	2,48
REFRIGERANT CIRCUIT											
Compressors nr.		N°	2	2	2	2	2	2	2	4	4
No. Circuits		N°	2	2	2	2	2	2	2	2	2
Refrigerant charge		kg									
NOISE LEVEL											
Sound Pressure	(2)	dB(A)	46	47	47	49	49	53	53	62	62
Sound power level in cooling	(3)(4)	dB(A)	78	79	79	81	81	85	85	94	94
SIZE AND WEIGHT											
A	(5)	mm	1695	2195	2195	2745	2745	3245	3245	3110	3110
B	(5)	mm	1120	1120	1120	1120	1120	1120	1120	2220	2220
H	(5)	mm	1420	1420	1420	1420	1420	1620	1620	1700	1700
Operating weight	(5)	kg	510	570	600	675	775	910	980	1520	1600

Notes:
1 Saturated intake temperature (dew) 5 °C; Source (side) heat exchanger air (in) 35 °C.
2 Average sound pressure level at 10 (m.) distance, unit in a free field on a reflective surface; non-binding value calculated from the sound power level.
3 Sound power on the basis of measurements made in compliance with ISO 9614.
4 Sound power level in cooling, outdoors.
5 Unit in standard configuration/execution, without optional accessories.
The units highlighted in this publication contain HFC R407C [GWP_{100} 1774] fluorinated greenhouse gases.

HCAT / HT			0524	0604
Power supply		V/ph/Hz	400/3/50	400/3/50
PERFORMANCE				
COOLING				
Cooling capacity	(1)	kW	146	170
Total power input	(1)	kW	53,3	60,3
EER	(1)	kW/kW	2,74	2,81
REFRIGERANT CIRCUIT				
Compressors nr.		N°	4	4
No. Circuits		N°	2	2
Refrigerant charge		kg		
NOISE LEVEL				
Sound Pressure	(2)	dB(A)	62	62
Sound power level in cooling	(3)(4)	dB(A)	94	94
SIZE AND WEIGHT				
A	(5)	mm	3110	3110
B	(5)	mm	2220	2220
H	(5)	mm	1700	2150
Operating weight	(5)	kg	1620	1700

Notes:
1 Saturated intake temperature (dew) 5 °C; Source (side) heat exchanger air (in) 35 °C.
2 Average sound pressure level at 10 (m.) distance, unit in a free field on a reflective surface; non-binding value calculated from the sound power level.
3 Sound power on the basis of measurements made in compliance with ISO 9614.
4 Sound power level in cooling, outdoors.
5 Unit in standard configuration/execution, without optional accessories.
The units highlighted in this publication contain HFC R407C [GWP_{100} 1774] fluorinated greenhouse gases.

HCAT / LN			0524	0604
Power supply		V/ph/Hz	400/3/50	400/3/50
PERFORMANCE				
COOLING				
Cooling capacity	(1)	kW	134	152
Total power input	(1)	kW	54,6	64,5
EER	(1)	kW/kW	2,46	2,36
REFRIGERANT CIRCUIT				
Compressors nr.		N°	4	4
No. Circuits		N°	2	2
Refrigerant charge		kg		
NOISE LEVEL				
Sound Pressure	(2)	dB(A)	54	54
Sound power level in cooling	(3)(4)	dB(A)	86	86
SIZE AND WEIGHT				
A	(5)	mm	3110	3110
B	(5)	mm	2220	2220
H	(5)	mm	1700	1700
Operating weight	(5)	kg	1520	1600

Notes:
1 Saturated intake temperature (dew) 5 °C; Source (side) heat exchanger air (in) 35 °C.
2 Average sound pressure level at 10 (m.) distance, unit in a free field on a reflective surface; non-binding value calculated from the sound power level.
3 Sound power on the basis of measurements made in compliance with ISO 9614.
4 Sound power level in cooling, outdoors.
5 Unit in standard configuration/execution, without optional accessories.
The units highlighted in this publication contain HFC R407C [GWP_{100} 1774] fluorinated greenhouse gases.

HCAT / SL			0524	0604
Power supply		V/ph/Hz	400/3/50	400/3/50
PERFORMANCE				
COOLING				
Cooling capacity	(1)	kW	132	152
Total power input	(1)	kW	54,1	63,3
EER	(1)	kW/kW	2,45	2,40
REFRIGERANT CIRCUIT				
Compressors nr.		N°	4	4
No. Circuits		N°	2	2
Refrigerant charge		kg		
NOISE LEVEL				
Sound Pressure	(2)	dB(A)	47	47
Sound power level in cooling	(3)(4)	dB(A)	79	79
SIZE AND WEIGHT				
A	(5)	mm	3110	3110
B	(5)	mm	2220	2220
H	(5)	mm	1700	2150
Operating weight	(5)	kg	1620	1700

Notes:
1 Saturated intake temperature (dew) 5 °C; Source (side) heat exchanger air (in) 35 °C.
2 Average sound pressure level at 10 (m.) distance, unit in a free field on a reflective surface; non-binding value calculated from the sound power level.
3 Sound power on the basis of measurements made in compliance with ISO 9614.
4 Sound power level in cooling, outdoors.
5 Unit in standard configuration/execution, without optional accessories.
The units highlighted in this publication contain HFC R407C [GWP_{100} 1774] fluorinated greenhouse gases.



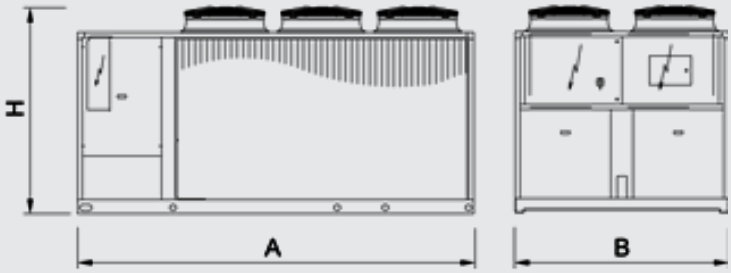

ANCILLARY PRODUCTS

MCAT 0501 - 1422

Condensing unit 110-351 kW



Outdoor split-system unit for connection with direct expansion coils or remote exchangers. Semi-hermetic reciprocating compressors, axial-flow fans, liquid receiver, compressor inlet and outlet valves with servicing plugs and liquid tap. External panels in Peraluman and base in galvanised sheet steel with paint finish. Refrigerant R407C, units with 1 or 2 compressors, single or double circuits.

Version

B	Basic
HT	High efficiency, high outdoor temperature version
LN	Low noise
SL	Super-low noise version

Features

TOTAL VERSATILITY

Condensing units available in 4 versions, designed to satisfy all service system and application requirements.

SEMI-HERMETIC RECIPROCATING COMPRESSORS

The MCAT units are fitted with semi-hermetic reciprocating compressors with the possibility of extra capacity control step

INCORPORATED LIQUID RECEIVER

Standard units are all fitted with liquid receiver to ensure best operation of the condensing section

MCAT / B			0501	0502	0601	0602	0702	0802
Power supply		V/ph/Hz	400/3/50	400/3/50	400/3/50	400/3/50	400/3/50	400/3/50
PERFORMANCE								
COOLING								
Cooling capacity	(1)	kW	119	141	115	134	160	188
Total power input	(1)	kW	46,7	55,9	42,8	51,2	68,2	81,0
EER	(1)	kW/kW	2,55	2,52	2,69	2,62	2,35	2,32
REFRIGERANT CIRCUIT								
Compressors nr.		N°	1	1	2	2	2	2
No. Circuits		N°	1	1	2	2	2	2
Refrigerant charge		kg						
NOISE LEVEL								
Sound Pressure	(2)	dB(A)	60	60	60	60	62	62
Sound power level in cooling	(3)(4)	dB(A)	92	92	92	92	94	94
SIZE AND WEIGHT								
A	(5)	mm	3110	3110	3110	3110	3110	3110
B	(5)	mm	2220	2220	2220	2220	2220	2220
H	(5)	mm	1540	1540	1540	1540	1540	1540
Operating weight	(5)	kg	1260	1310	1350	1420	1500	1610

MCAT / B			0822	1002	1202	1222	1422
Power supply		V/ph/Hz	400/3/50	400/3/50	400/3/50	400/3/50	400/3/50
PERFORMANCE							
COOLING							
Cooling capacity	(1)	kW	203	236	282	297	325
Total power input	(1)	kW	80,3	93,9	112	119	128
EER	(1)	kW/kW	2,53	2,51	2,52	2,50	2,54
REFRIGERANT CIRCUIT							
Compressors nr.		N°	2	2	2	2	2
No. Circuits		N°	2	2	2	2	2
Refrigerant charge		kg					
NOISE LEVEL							
Sound Pressure	(2)	dB(A)	62	62	62	64	64
Sound power level in cooling	(3)(4)	dB(A)	94	94	94	96	96
SIZE AND WEIGHT							
A	(5)	mm	3110	3110	4110	5110	5110
B	(5)	mm	2220	2220	2220	2220	2220
H	(5)	mm	1990	1990	1990	1990	1990
Operating weight	(5)	kg	1690	1870	2060	2160	2280

Notes:
1 Saturated intake temperature (dew) 5 °C; Source (side) heat exchanger air (in) 35 °C.
2 Average sound pressure level at 10 (m.) distance, unit in a free field on a reflective surface; non-binding value calculated from the sound power level.
3 Sound power on the basis of measurements made in compliance with ISO 9614.
4 Sound power level in cooling, outdoors.
5 Unit in standard configuration/execution, without optional accessories.
The units highlighted in this publication contain HFC R407C [GWP_{100} 1774] fluorinated greenhouse gases.

MCAT / HT			0501	0502	0601	0602	0702	0802
Power supply		V/ph/Hz	400/3/50	400/3/50	400/3/50	400/3/50	400/3/50	400/3/50
PERFORMANCE								
COOLING								
Cooling capacity	(1)	kW	127	122	149	143	174	211
Total power input	(1)	kW	46,6	43,2	55,5	51,5	63,9	76,5
EER	(1)	kW/kW	2,73	2,82	2,68	2,78	2,72	2,76
REFRIGERANT CIRCUIT								
Compressors nr.		N°	1	2	1	2	2	2
No. Circuits		N°	1	2	1	2	2	2
Refrigerant charge		kg						
NOISE LEVEL								
Sound Pressure	(2)	dB(A)	62	62	62	62	62	62
Sound power level in cooling	(3)(4)	dB(A)	94	94	94	94	94	94
SIZE AND WEIGHT								
A	(5)	mm	3110	3110	3110	3110	3110	4110
B	(5)	mm	2220	2220	2220	2220	2220	2220
H	(5)	mm	1700	1700	1700	1700	2150	2150
Operating weight	(5)	kg	1330	1430	1390	1500	1640	1880

Notes:
1 Saturated intake temperature (dew) 5 °C; Source (side) heat exchanger air (in) 35 °C.
2 Average sound pressure level at 10 (m.) distance, unit in a free field on a reflective surface; non-binding value calculated from the sound power level.
3 Sound power on the basis of measurements made in compliance with ISO 9614.
4 Sound power level in cooling, outdoors.
5 Unit in standard configuration/execution, without optional accessories.
The units highlighted in this publication contain HFC R407C [GWP_{100} 1774] fluorinated greenhouse gases.

MCAT / HT			0822	1002	1202	1222	1422
Power supply		V/ph/Hz	400/3/50	400/3/50	400/3/50	400/3/50	400/3/50
PERFORMANCE							
COOLING							
Cooling capacity	(1)	kW	223	256	305	321	351
Total power input	(1)	kW	77,3	89,5	109	114	126
EER	(1)	kW/kW	2,88	2,86	2,80	2,80	2,78
REFRIGERANT CIRCUIT							
Compressors nr.		N°	2	2	2	2	2
No. Circuits		N°	2	2	2	2	2
Refrigerant charge		kg					
NOISE LEVEL							
Sound Pressure	(2)	dB(A)	62	64	64	64	65
Sound power level in cooling	(3)(4)	dB(A)	94	96	96	96	97
SIZE AND WEIGHT							
A	(5)	mm	4110	4110	5110	5110	5110
B	(5)	mm	2220	2220	2220	2220	2220
H	(5)	mm	2150	2150	2150	2150	2150
Operating weight	(5)	kg	1890	2100	2340	2400	2780

Notes:
1 Saturated intake temperature (dew) 5 °C; Source (side) heat exchanger air (in) 35 °C.
2 Average sound pressure level at 10 (m.) distance, unit in a free field on a reflective surface; non-binding value calculated from the sound power level.
3 Sound power on the basis of measurements made in compliance with ISO 9614.
4 Sound power level in cooling, outdoors.
5 Unit in standard configuration/execution, without optional accessories.
The units highlighted in this publication contain HFC R407C [GWP_{100} 1774] fluorinated greenhouse gases.

MCAT / LN			0501	0502	0601	0602	0702	0802
Power supply		V/ph/Hz	400/3/50	400/3/50	400/3/50	400/3/50	400/3/50	400/3/50
PERFORMANCE								
COOLING								
Cooling capacity	(1)	kW	115	135	111	129	154	179
Total power input	(1)	kW	48,0	57,7	43,9	52,6	70,2	83,7
EER	(1)	kW/kW	2,40	2,34	2,53	2,45	2,19	2,14
REFRIGERANT CIRCUIT								
Compressors nr.		N°	1	1	2	2	2	2
No. Circuits		N°	1	1	2	2	2	2
Refrigerant charge		kg						
NOISE LEVEL								
Sound Pressure	(2)	dB(A)	54	54	54	54	56	56
Sound power level in cooling	(3)(4)	dB(A)	86	86	86	86	88	88
SIZE AND WEIGHT								
A	(5)	mm	3110	3110	3110	3110	4110	4110
B	(5)	mm	2220	2220	2220	2220	2220	2220
H	(5)	mm	1700	1700	1700	1700	2150	2150
Operating weight	(5)	kg	1260	1310	1350	1420	1500	1610

MCAT / LN			0822	1002	1202	1222	1422
Power supply		V/ph/Hz	400/3/50	400/3/50	400/3/50	400/3/50	400/3/50
PERFORMANCE							
COOLING							
Cooling capacity	(1)	kW	195	226	271	285	312
Total power input	(1)	kW	82,5	97,4	115	121	132
EER	(1)	kW/kW	2,36	2,32	2,36	2,36	2,36
REFRIGERANT CIRCUIT							
Compressors nr.		N°	2	2	2	2	2
No. Circuits		N°	2	2	2	2	2
Refrigerant charge		kg					
NOISE LEVEL							
Sound Pressure	(2)	dB(A)	56	56	56	58	58
Sound power level in cooling	(3)(4)	dB(A)	88	88	88	90	90
SIZE AND WEIGHT							
A	(5)	mm	4110	4110	4110	5110	5110
B	(5)	mm	2220	2220	2220	2220	2220
H	(5)	mm	2150	2150	2150	2150	2150
Operating weight	(5)	kg	1690	1870	2060	2160	2280

Notes:
1 Saturated intake temperature (dew) 5 °C; Source (side) heat exchanger air (in) 35 °C.
2 Average sound pressure level at 10 (m.) distance, unit in a free field on a reflective surface; non-binding value calculated from the sound power level.
3 Sound power on the basis of measurements made in compliance with ISO 9614.
4 Sound power level in cooling, outdoors.
5 Unit in standard configuration/execution, without optional accessories.
The units highlighted in this publication contain HFC R407C [GWP_{100} 1774] fluorinated greenhouse gases.

MCAT / SL			0501	0502	0601	0602	0702	0802
Power supply		V/ph/Hz	400/3/50	400/3/50	400/3/50	400/3/50	400/3/50	400/3/50
PERFORMANCE								
COOLING								
Cooling capacity	(1)	kW	114	140	110	129	154	187
Total power input	(1)	kW	49,0	56,7	44,9	53,3	67,9	80,9
EER	(1)	kW/kW	2,33	2,47	2,45	2,42	2,27	2,31
REFRIGERANT CIRCUIT								
Compressors nr.		N°	1	1	2	2	2	2
No. Circuits		N°	1	1	2	2	2	2
Refrigerant charge		kg						
NOISE LEVEL								
Sound Pressure	(2)	dB(A)	79	79	79	79	79	80
Sound power level in cooling	(3)(4)	dB(A)	63	63	63	63	63	64
SIZE AND WEIGHT								
A	(5)	mm	3110	3110	3110	3110	4110	4110
B	(5)	mm	2220	2220	2220	2220	2220	2220
H	(5)	mm	1700	1700	1700	1700	2150	2150
Operating weight	(5)	kg	1370	1450	1460	1560	1780	1880

MCAT / SL			0822	1002	1202	1222	1422
Power supply		V/ph/Hz	400/3/50	400/3/50	400/3/50	400/3/50	400/3/50
PERFORMANCE							
COOLING							
Cooling capacity	(1)	kW	203	230	280	295	323
Total power input	(1)	kW	79,9	95,4	113	119	130
EER	(1)	kW/kW	2,54	2,41	2,48	2,48	2,49
REFRIGERANT CIRCUIT							
Compressors nr.		N°	2	2	2	2	2
No. Circuits		N°	2	2	2	2	2
Refrigerant charge		kg					
NOISE LEVEL							
Sound Pressure	(2)	dB(A)	80	81	81	83	84
Sound power level in cooling	(3)(4)	dB(A)	64	65	65	67	68
SIZE AND WEIGHT							
A	(5)	mm	4110	4110	4110	5110	5110
B	(5)	mm	2220	2220	2220	2220	2220
H	(5)	mm	2150	2150	2150	2150	2150
Operating weight	(5)	kg	1890	2100	2340	2420	2690

Notes:
1 Saturated intake temperature (dew) 5 °C; Source (side) heat exchanger air (in) 35 °C.
2 Average sound pressure level at 10 (m.) distance, unit in a free field on a reflective surface; non-binding value calculated from the sound power level.
3 Sound power on the basis of measurements made in compliance with ISO 9614.
4 Sound power level in cooling, outdoors.
5 Unit in standard configuration/execution, without optional accessories.
The units highlighted in this publication contain HFC R407C [GWP_{100} 1774] fluorinated greenhouse gases.

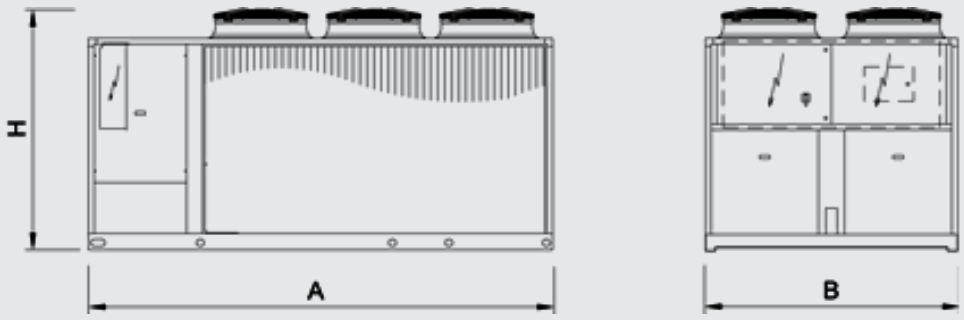

ANCILLARY PRODUCTS

NHCR 0011-21 - 0121

Remote condenser with axial fans 7,90-40,1 kW

Features

Structure and base in hot-dip galvanised steel with epoxy powder paint finish.
Finned coil exchanger made from copper tubes and aluminium fins. The aluminium fins are correctly spaced to guarantee optimum heat exchange efficiency.



Remote condensers with axial-type fans for outdoor installation. Installation may be vertical with a horizontal air outflow or, using special brackets, horizontal with an upward air outflow.

NHCR			0011-21	0025-31-41	0051	0061	0071-91	0101	0121
Power supply		V/ph/Hz	230/1/50	230/1/50	230/1/50	230/1/50	230/1/50	230/1/50	230/1/50
PERFORMANCE									
NOMINAL SPECIFICATIONS									
Rated capacity	(1)	kW	7,90	15,9	16,3	24,0	25,5	32,7	40,1
No. Circuits		N°	1	1	1	1	1	1	1
Total power input	(1)	kW	0,16	0,32	0,27	0,48	0,54	0,54	0,81
FANS									
Air flow		m³/h	2267	4535	4899	6802	10330	9798	15500
NOISE LEVEL									
Sound Power	(2)	dB(A)	33	36	35	38	38	38	40
SIZE AND WEIGHT									
A	(3)	mm	780	1380	1105	1980	2005	2005	2905
H	(3)	mm	555	555	828	555	828	828	828
B	(3)	mm	362	362	428	362	428	428	428
Weight	(3)	kg	20	38	43	51	76	84	111

Notes:
1 Exchanger air (in) 35 °C; ΔT = 17 K.
2 Sound power on the basis of measurements made in compliance with ISO 9614.
3 Unit in standard configuration/execution, without optional accessories.
The units highlighted in this publication contain HFC R407C [GWP_{100} 1774] fluorinated greenhouse gases.

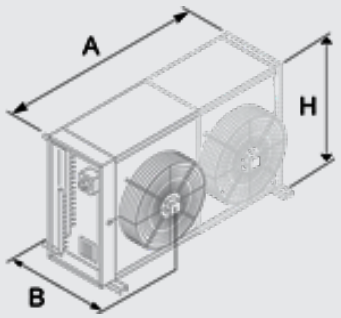

ANCILLARY PRODUCTS

NCE 118A - 528B

Remote condenser with axial fans 45,0-566 kW

Version	
B	Basic
LN	Low noise
SL	super-low noise version



Remote condensers with axial-type fans for outdoor installation. Installation may be vertical with a horizontal air outflow or, using special brackets, horizontal with an upward air outflow. The very low noise, adjustable-speed fans are excellent for use for both industrial and commercial applications.

NCE / B			118B	118C	218A	218B	218C	318A	318B	318C
Power supply		V/ph/Hz	400/3/50+PE	400/3/50+PE	400/3/50+PE	400/3/50+PE	400/3/50+PE	400/3/50+PE	400/3/50+PE	400/3/50+PE
PERFORMANCE										
NOMINAL SPECIFICATIONS										
Rated capacity	(1)	kW	68,0	75,0	110	135	150	160	197	228
No. Circuits		N°	Non un numero	Non un numero	Non un numero	Non un numero	Non un numero	Non un numero	Non un numero	Non un numero
Total power input	(1)	kW	2,00	2,00	4,00	4,00	4,00	6,00	6,00	6,00
FANS										
Air flow		m³/h	19600	18400	42400	39000	36800	63600	58800	55200
NOISE LEVEL										
Sound Power	(2)	dB(A)	81	81	84	84	84	86	86	86
SIZE AND WEIGHT										
A	(3)	mm	1880	1880	3230	3230	3230	4580	4580	4580
H	(3)	mm	1370	1370	1370	1370	1370	1370	1370	1370
B	(3)	mm	800	800	800	800	800	800	800	800
Weight	(3)	kg	157	168	279	302	324	413	447	481

NCE / B			328A	328B	328C	418B	418C	428B	428C
Power supply		V/ph/Hz	400/3/50+PE	400/3/50+PE	400/3/50+PE	400/3/50+PE	400/3/50+PE	400/3/50+PE	400/3/50+PE
PERFORMANCE									
NOMINAL SPECIFICATIONS									
Rated capacity	(1)	kW	301	389	430	270	300	511	566
No. Circuits		N°	Non un numero	Non un numero	Non un numero	Non un numero	Non un numero	Non un numero	Non un numero
Total power input	(1)	kW	12,0	12,0	12,0	8,00	8,00	16,0	16,0
FANS									
Air flow		m³/h	123600	114000	106200	78400	73600	152000	141600
NOISE LEVEL									
Sound Power	(2)	dB(A)	89	89	89	86	86	90	90
SIZE AND WEIGHT									
A	(3)	mm	5930	4580	4580	5930	5930	5930	5930
H	(3)	mm	2390	2390	2390	1370	1370	2390	2390
B	(3)	mm	800	800	800	800	800	800	800
Weight	(3)	kg	680	742	804	592	637	982	1065

Notes:
1 Exchanger air (in) 35 °C; ΔT = 17 K.
2 Sound power on the basis of measurements made in compliance with ISO 9614.
3 Unit in standard configuration/execution, without optional accessories.
The units highlighted in this publication contain HFC R410A [GWP_{100} 2088] fluorinated greenhouse gases.

NCE / LN			118A	118B	118C	218A	218B	218C	318A	318B
Power supply		V/ph/Hz	400/3/50+PE	400/3/50+PE	400/3/50+PE	400/3/50+PE	400/3/50+PE	400/3/50+PE	400/3/50+PE	400/3/50+PE
PERFORMANCE										
NOMINAL SPECIFICATIONS										
Rated capacity	(1)	kW	49,0	58,0	63,0	97,0	116	125	141	169
No. Circuits		N°	Non un numero	Non un numero	Non un numero	Non un numero	Non un numero	Non un numero	Non un numero	Non un numero
Total power input	(1)	kW	1,30	1,30	1,30	2,50	2,50	2,50	3,80	3,80
FANS										
Air flow		m³/h	17000	15500	14400	34000	31000	28800	51000	46500
NOISE LEVEL										
Sound Power	(2)	dB(A)	75	75	75	78	78	78	80	80
SIZE AND WEIGHT										
A	(3)	mm	1880	1880	1880	3230	3230	3230	4580	4580
H	(3)	mm	1370	1370	1370	1370	1370	1370	1370	1370
B	(3)	mm	800	800	800	800	800	800	800	800
Weight	(3)	kg	145	157	168	279	302	324	413	447

NCE / LN			318C	328A	328B	328C	418B	418C	428B	428C
Power supply		V/ph/Hz	400/3/50+PE	400/3/50+PE	400/3/50+PE	400/3/50+PE	400/3/50+PE	400/3/50+PE	400/3/50+PE	400/3/50+PE
PERFORMANCE										
NOMINAL SPECIFICATIONS										
Rated capacity	(1)	kW	191	264	331	354	232	251	435	466
No. Circuits		N°	Non un numero	Non un numero	Non un numero	Non un numero	Non un numero	Non un numero	Non un numero	Non un numero
Total power input	(1)	kW	3,80	7,60	7,60	7,60	5,10	5,10	10,2	10,2
FANS										
Air flow		m³/h	43200	97800	88800	81000	46500	43200	118400	108000
NOISE LEVEL										
Sound Power	(2)	dB(A)	80	83	83	83	80	80	84	84
SIZE AND WEIGHT										
A	(3)	mm	4580	4580	4580	4580	5930	5930	5930	5930
H	(3)	mm	1370	2390	2390	2390	1370	1370	2390	2390
B	(3)	mm	800	800	800	800	800	800	800	800
Weight	(3)	kg	481	680	742	804	592	637	982	1065

Notes:
1 Exchanger air (in) 35 °C; ΔT = 17 K.
2 Sound power on the basis of measurements made in compliance with ISO 9614.
3 Unit in standard configuration/execution, without optional accessories.
The units highlighted in this publication contain HFC R410A [GWP_{100} 2088] fluorinated greenhouse gases.

NCE / SL			216A	216B	218A	218C	316A	318A	318B	328A
Power supply		V/ph/Hz	400/3/50+PE	400/3/50+PE	400/3/50+PE	400/3/50+PE	400/3/50+PE	400/3/50+PE	400/3/50+PE	400/3/50+PE
PERFORMANCE										
NOMINAL SPECIFICATIONS										
Rated capacity	(1)	kW	45,0	49,0	79,0	95,0	67,0	115	133	215
No. Circuits		N°	Non un numero	Non un numero	Non un numero	Non un numero	Non un numero	Non un numero	Non un numero	Non un numero
Total power input	(1)	kW	0,40	0,40	1,20	1,20	0,60	1,80	1,80	3,60
FANS										
Air flow		m³/h	11600	10400	24400	20200	17400	36600	33000	48800
NOISE LEVEL										
Sound Power	(2)	dB(A)	68	68	71	71	70	73	73	76
SIZE AND WEIGHT										
A	(3)	mm	2630	2630	3230	3230	3770	4580	4580	4580
H	(3)	mm	1230	1230	1370	1370	1230	1370	1370	2390
B	(3)	mm	600	600	800	800	600	800	800	800
Weight	(3)	kg	200	215	340	360	290	490	530	770

NCE / SL			328B	328C	418A	418B	418C	428A	428B	528B
Power supply		V/ph/Hz	400/3/50+PE	400/3/50+PE	400/3/50+PE	400/3/50+PE	400/3/50+PE	400/3/50+PE	400/3/50+PE	400/3/50+PE
PERFORMANCE										
NOMINAL SPECIFICATIONS										
Rated capacity	(1)	kW	259	273	158	182	190	295	340	430
No. Circuits		N°	Non un numero	Non un numero	Non un numero	Non un numero	Non un numero	Non un numero	Non un numero	Non un numero
Total power input	(1)	kW	3,60	3,60	2,40	2,40	2,40	4,80	4,80	6,00
FANS										
Air flow		m³/h	44000	40400	69600	62400	57600	92800	83200	104000
NOISE LEVEL										
Sound Power	(2)	dB(A)	76	76	74	74	74	77	77	78
SIZE AND WEIGHT										
A	(3)	mm	4580	4580	5930	5930	5930	4580	4580	7280
H	(3)	mm	2390	2390	1370	1370	1370	2390	2390	2390
B	(3)	mm	800	800	800	800	800	800	800	800
Weight	(3)	kg	830	890	645	695	735	1010	1090	1350

Notes:
1 Exchanger air (in) 35 °C; ΔT = 17 K.
2 Sound power on the basis of measurements made in compliance with ISO 9614.
3 Unit in standard configuration/execution, without optional accessories.
The units highlighted in this publication contain HFC R410A [GWP_{100} 2088] fluorinated greenhouse gases.

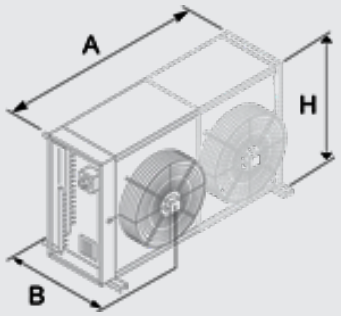

ANCILLARY PRODUCTS

FCE 218A - 828C

Remote condenser with axial fans 83,0-929 kW

Version	
B	Basic
LN	Low noise
SL	super-low noise version



Remote condensers with axial-type fans for outdoor installation. Installation may be vertical with a horizontal air outflow or, using special brackets, horizontal with an upward air outflow. The very low noise, adjustable-speed fans are excellent for use for both industrial and commercial applications.

FCE / B			218B	228A	228B	228C	318B	328B	328C	418C	428B
Power supply		V/ph/Hz	400/3/50+PE	400/3/50+PE	400/3/50+PE	400/3/50+PE	400/3/50+PE	400/3/50+PE	400/3/50+PE	400/3/50+PE	400/3/50+PE
PERFORMANCE											
NOMINAL SPECIFICATIONS											
Rated capacity	(1)	kW	123	185	232	262	177	340	390	278	464
No. Circuits		N°	Non un numero	Non un numero	Non un numero	Non un numero	Non un numero	Non un numero	Non un numero	Non un numero	Non un numero
Total power input	(1)	kW	4,00	8,00	8,00	8,00	6,00	12,0	12,0	8,00	16,0
FANS											
Air flow		m³/h	39200	82400	76000	70800	58800	114000	106200	73600	152000
NOISE LEVEL											
Sound Power	(2)	dB(A)	84	87	87	87	86	89	89	87	90
SIZE AND WEIGHT											
A	(3)	mm	3230	3230	3230	3230	4580	4580	4580	5930	5930
H	(3)	mm	1370	2390	2390	2390	1370	2390	2390	1370	2390
B	(3)	mm	800	800	800	800	800	800	800	800	800
Weight	(3)	kg	302	462	502	543	447	742	804	637	982

FCE / B			428C	518B	518C	528B	528C	628B	628C	828B
Power supply		V/ph/Hz	400/3/50+PE	400/3/50+PE	400/3/50+PE	400/3/50+PE	400/3/50+PE	400/3/50+PE	400/3/50+PE	400/3/50+PE
PERFORMANCE										
NOMINAL SPECIFICATIONS										
Rated capacity	(1)	kW	524	311	351	586	661	683	783	929
No. Circuits		N°	Non un numero	Non un numero	Non un numero	Non un numero	Non un numero	Non un numero	Non un numero	Non un numero
Total power input	(1)	kW	16,0	10,0	10,0	20,0	20,0	24,0	24,0	32,0
FANS										
Air flow		m³/h	141600	98000	92000	190000	177000	228000	212400	236800
NOISE LEVEL										
Sound Power	(2)	dB(A)	90	88	88	91	91	91	92	94
SIZE AND WEIGHT										
A	(3)	mm	5930	7280	7280	7280	7280	8630	8630	11330
H	(3)	mm	2390	1370	1370	2390	2390	2390	2390	2390
B	(3)	mm	800	800	800	800	800	800	800	800
Weight	(3)	kg	1065	737	794	1222	1325	1461	1585	1942

Notes:
1 Exchanger air (in) 35 °C; ΔT = 17 K.
2 Sound power on the basis of measurements made in compliance with ISO 9614.
3 Unit in standard configuration/execution, without optional accessories.
The units highlighted in this publication contain HFC R134a [GWP_{100} 1430] fluorinated greenhouse gases.

FCE / LN			218A	218B	228A	228B	228C	318B	328A
Power supply		V/ph/Hz	400/3/50+PE	400/3/50+PE	400/3/50+PE	400/3/50+PE	400/3/50+PE	400/3/50+PE	400/3/50+PE
PERFORMANCE									
NOMINAL SPECIFICATIONS									
Rated capacity	(1)	kW	87,0	107	164	200	219	154	233
No. Circuits		N°	Non un numero	Non un numero	Non un numero	Non un numero	Non un numero	Non un numero	Non un numero
Total power input	(1)	kW	2,50	2,50	5,10	5,10	5,10	3,80	7,60
FANS									
Air flow		m³/h	34000	31000	65200	59200	54000	46500	97800
NOISE LEVEL									
Sound Power	(2)	dB(A)	78	78	81	81	81	80	83
SIZE AND WEIGHT									
A	(3)	mm	3230	3230	3230	3230	3230	4580	4580
H	(3)	mm	1370	1370	2390	2390	2390	1370	2390
B	(3)	mm	800	800	800	800	800	800	800
Weight	(3)	kg	279	302	462	502	543	447	680

FCE / LN			328B	328C	418C	428B	428C	518B	518C
Power supply		V/ph/Hz	400/3/50+PE	400/3/50+PE	400/3/50+PE	400/3/50+PE	400/3/50+PE	400/3/50+PE	400/3/50+PE
PERFORMANCE									
NOMINAL SPECIFICATIONS									
Rated capacity	(1)	kW	299	329	236	399	437	270	283
No. Circuits		N°	Non un numero	Non un numero	Non un numero	Non un numero	Non un numero	Non un numero	Non un numero
Total power input	(1)	kW	7,60	7,60	5,10	10,2	10,2	6,40	6,40
FANS									
Air flow		m³/h	88800	81000	57600	118400	108000	77500	72000
NOISE LEVEL									
Sound Power	(2)	dB(A)	83	83	81	84	84	82	82
SIZE AND WEIGHT									
A	(3)	mm	4580	4580	5930	5930	5930	7280	7280
H	(3)	mm	2390	2390	1370	2390	2390	1370	1370
B	(3)	mm	800	800	800	800	800	800	800
Weight	(3)	kg	742	804	637	982	1065	737	794

Notes:
1 Exchanger air (in) 35 °C; ΔT = 17 K.
2 Sound power on the basis of measurements made in compliance with ISO 9614.
3 Unit in standard configuration/execution, without optional accessories.
The units highlighted in this publication contain HFC R134a [GWP_{100} 1430] fluorinated greenhouse gases.

FCE / LN			528B	528C	628B	628C	828B
Power supply		V/ph/Hz	400/3/50+PE	400/3/50+PE	400/3/50+PE	400/3/50+PE	400/3/50+PE
PERFORMANCE							
NOMINAL SPECIFICATIONS							
Rated capacity	(1)	kW	506	553	599	660	800
No. Circuits		N°	Non un numero	Non un numero	Non un numero	Non un numero	Non un numero
Total power input	(1)	kW	12,7	12,7	15,2	15,2	20,3
FANS							
Air flow		m³/h	148000	135000	177600	162000	236800
NOISE LEVEL							
Sound Power	(2)	dB(A)	85	85	86	86	88
SIZE AND WEIGHT							
A	(3)	mm	7280	7280	8630	8630	11330
H	(3)	mm	2390	2390	2390	2390	2390
B	(3)	mm	800	800	800	800	800
Weight	(3)	kg	1222	1325	1461	1585	1942

Notes:
1 Exchanger air (in) 35 °C; ΔT = 17 K.
2 Sound power on the basis of measurements made in compliance with ISO 9614.
3 Unit in standard configuration/execution, without optional accessories.
The units highlighted in this publication contain HFC R134a [GWP_{100} 1430] fluorinated greenhouse gases.

FCE / SL			228C	318A	318B	328B	328C	416A	418A
Power supply		V/ph/Hz	400/3/50+PE	400/3/50+PE	400/3/50+PE	400/3/50+PE	400/3/50+PE	400/3/50+PE	400/3/50+PE
PERFORMANCE									
NOMINAL SPECIFICATIONS									
Rated capacity	(1)	kW	171	104	122	241	260	83,0	145
No. Circuits		N°	Non un numero	Non un numero	Non un numero	Non un numero	Non un numero	Non un numero	Non un numero
Total power input	(1)	kW	2,40	1,80	1,80	3,50	3,50	0,80	2,40
FANS									
Air flow		m³/h	38400	36600	33000	82200	76200	23200	48800
NOISE LEVEL									
Sound Power	(2)	dB(A)	74	73	73	76	76	71	74
SIZE AND WEIGHT									
A	(3)	mm	3230	4580	4580	4580	4580	4910	5930
H	(3)	mm	2390	1370	1370	2390	2390	1230	1370
B	(3)	mm	800	800	800	800	800	600	800
Weight	(3)	kg	543	413	447	742	804	292	547

FCE / SL			418B	418C	428A	428B	428C	518B	528B
Power supply		V/ph/Hz	400/3/50+PE	400/3/50+PE	400/3/50+PE	400/3/50+PE	400/3/50+PE	400/3/50+PE	400/3/50+PE
PERFORMANCE									
NOMINAL SPECIFICATIONS									
Rated capacity	(1)	kW	171	173	270	318	342	217	274
No. Circuits		N°	Non un numero	Non un numero	Non un numero	Non un numero	Non un numero	Non un numero	Non un numero
Total power input	(1)	kW	2,40	2,40	4,70	4,70	4,70	3,00	5,90
FANS									
Air flow		m³/h	44000	40400	92800	83200	76800	55000	104000
NOISE LEVEL									
Sound Power	(2)	dB(A)	74	74	77	77	77	75	78
SIZE AND WEIGHT									
A	(3)	mm	5930	5930	5930	5930	5930	7280	7280
H	(3)	mm	1370	1370	2390	2390	2390	1370	2390
B	(3)	mm	800	800	800	800	800	800	800
Weight	(3)	kg	592	637	900	982	1065	737	1222

FCE / SL			528C	628B	628C	728B	728C	828B	828C
Power supply		V/ph/Hz	400/3/50+PE	400/3/50+PE	400/3/50+PE	400/3/50+PE	400/3/50+PE	400/3/50+PE	400/3/50+PE
PERFORMANCE									
NOMINAL SPECIFICATIONS									
Rated capacity	(1)	kW	433	483	520	552	600	636	683
No. Circuits		N°	Non un numero	Non un numero	Non un numero	Non un numero	Non un numero	Non un numero	Non un numero
Total power input	(1)	kW	5,90	7,10	7,10	8,30	8,30	9,40	9,40
FANS									
Air flow		m³/h	96000	124800	115200	145600	134400	166400	153600
NOISE LEVEL									
Sound Power	(2)	dB(A)	78	79	79	79	79	80	80
SIZE AND WEIGHT									
A	(3)	mm	7280	8630	8630	9980	9980	11330	11330
H	(3)	mm	2390	2390	2390	2390	2390	2390	2390
B	(3)	mm	800	800	800	800	800	800	800
Weight	(3)	kg	1325	1461	1585	1702	1845	1942	2106

Notes:
1 Exchanger air (in) 35 °C; ΔT = 17 K.
2 Sound power on the basis of measurements made in compliance with ISO 9614.
3 Unit in standard configuration/execution, without optional accessories.
The units highlighted in this publication contain HFC R134a [GWP_{100} 1430] fluorinated greenhouse gases.

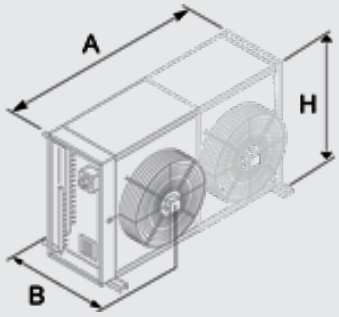
A
H
B

<<< BACK INDEX

CLIMAVENETA®
SUSTAINABLE COMFORT

eco Changes for a greener tomorrow

Eco Changes is the Mitsubishi Electric Group's environmental statement, and expresses the Group's stance on environmental management. Through a wide range of businesses, we are helping contribute to the realization of a sustainable society.

MITSUBISHI ELECTRIC HYDRONICS & IT COOLING SYSTEMS S.p.A.

Head Office: Via Sarson 57/c - 36061 Bassano del Grappa (VI) - Italy
Tel (+39) 0424 509 500 - Fax (+39) 0424 509 509
www.climaveneta.com
www.melcohit.com